US008894470B2

(12) **United States Patent**
Huang et al.

(10) **Patent No.: US 8,894,470 B2**
(45) **Date of Patent: Nov. 25, 2014**

(54) **COUNTER-ROTATING POLISHER**

(71) Applicant: **Hammer Electric Power Tools Co., Ltd**, Zhuji, Zhejiang (CN)

(72) Inventors: **Jianchu Huang**, Zhejiang (CN); **Kewei Wang**, Zhejiang (CN); **Kunyuan Chu**, Zhejiang (CN); **Xiaoping Xu**, Zhejiang (CN); **Ligang Zhu**, Zhejiang (CN)

(73) Assignee: **Hammer Electric Power Tools Co., Ltd.**, Zhuji, Zhejiang (CN)

(*) Notice: Subject to any disclaimer, the term of this patent is extended or adjusted under 35 U.S.C. 154(b) by 0 days.

(21) Appl. No.: **14/093,435**

(22) Filed: **Nov. 30, 2013**

(65) **Prior Publication Data**

US 2014/0080390 A1 Mar. 20, 2014

Related U.S. Application Data

(63) Continuation of application No. 12/946,826, filed on Nov. 15, 2010, now Pat. No. 8,662,965.

(30) **Foreign Application Priority Data**

Sep. 20, 2010 (CN) 2010 1 0290569

(51) **Int. Cl.**
B24B 23/02 (2006.01)

(52) **U.S. Cl.**
USPC **451/359**; 451/353; 451/294

(58) **Field of Classification Search**
USPC 451/259, 294, 344, 350, 353, 357, 359
See application file for complete search history.

(56) **References Cited**

U.S. PATENT DOCUMENTS

4,158,246	A *	6/1979	Meadows et al.	15/28
6,032,313	A *	3/2000	Tsang	15/22.1
6,042,310	A *	3/2000	Campbell et al.	409/131
6,752,702	B1 *	6/2004	Thompson et al.	451/177
7,563,156	B2 *	7/2009	Anderson	451/353
7,707,674	B2 *	5/2010	Schonewille et al.	15/28
7,828,632	B2 *	11/2010	Palushi	451/350
2003/0040265	A1 *	2/2003	Palushi	451/350
2010/0223874	A1 *	9/2010	Young	52/318
2012/0088442	A1 *	4/2012	Huang et al.	451/442

* cited by examiner

Primary Examiner — Eileen P. Morgan

(57) **ABSTRACT**

A counter-rotating polisher includes: an enclosure, an electric motor, a polishing arrangement and a counter-rotating arrangement. The electric motor is fixed to the enclosure and includes a driving axle. The polishing arrangement includes two polishing device. The polishing devices respectively include a fixed tray and a polishing material that are fixedly connected to an outside of the fixed tray. The fixed tray is perpendicular to the driving axle. The counter-rotating arrangement includes a first driving wheel, a second driving wheel and a change-direction wheel. The first driving wheel is connected to the driving axle and driven by the driving axle. The second driving wheel is fixedly connected to the second fixed tray. The change-direction wheel is connected to the first driving wheel and the second driving wheel. The driving axle rotates the first polishing material positively. The change-direction wheel reversely transmits the rotation to the second driving wheel.

1 Claim, 5 Drawing Sheets

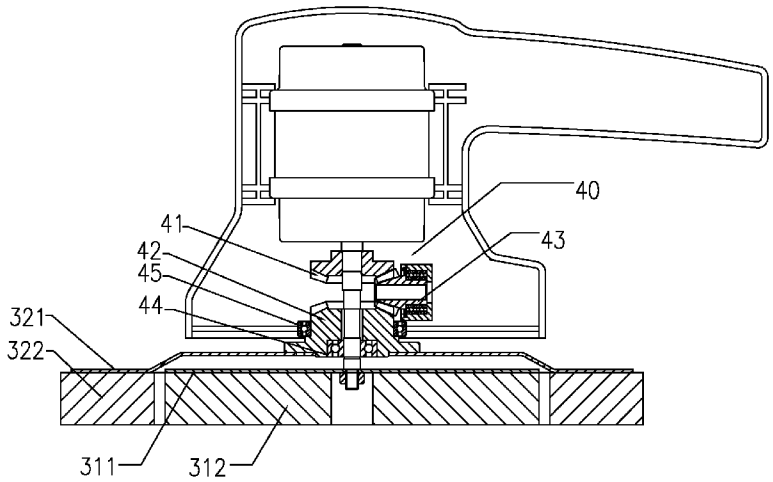

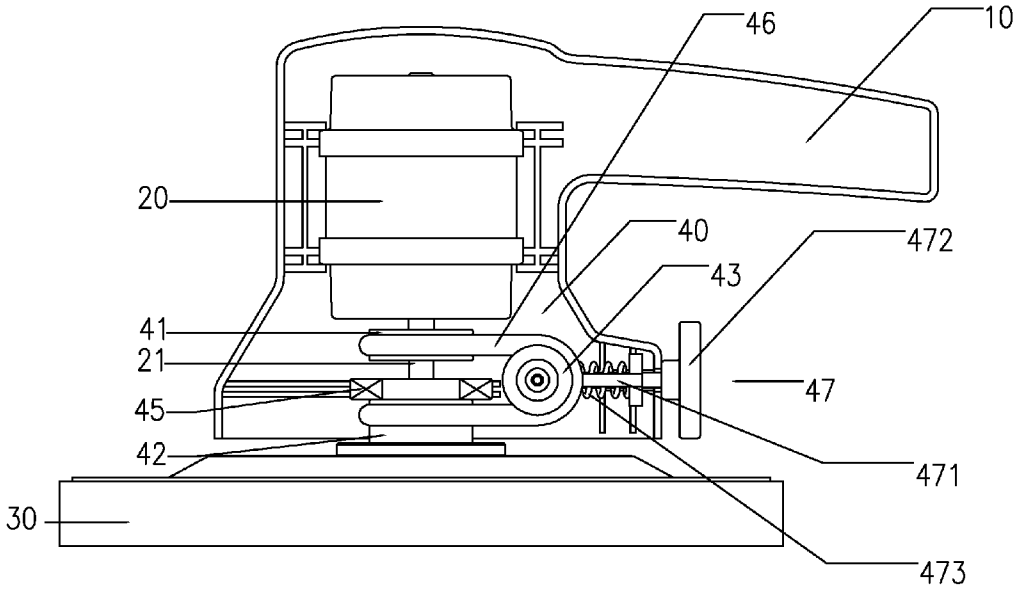
46
10
20
40
472
43
41
21
47
45
42
471
30
473

FIG. 1

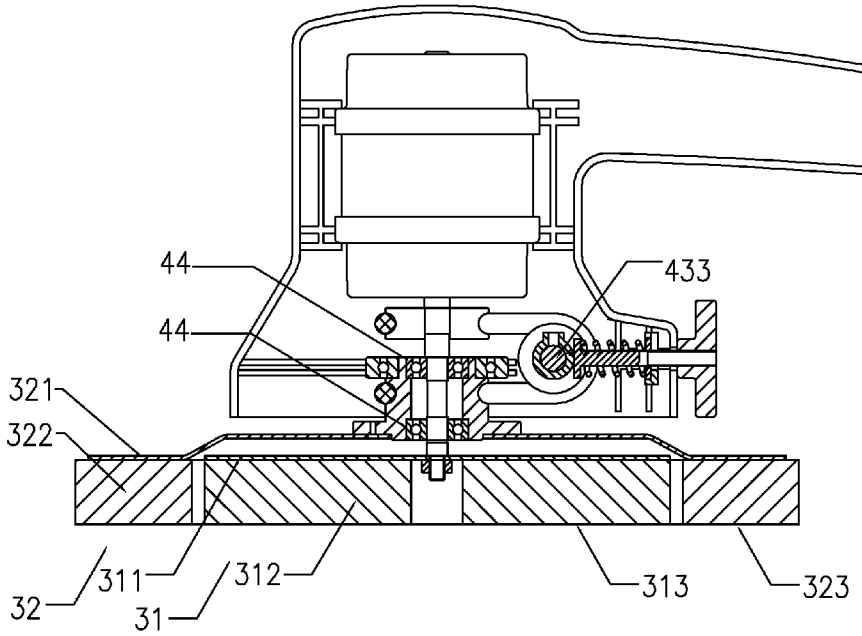
44
433
44
321
322
32
311
312
313
323
31

FIG. 2

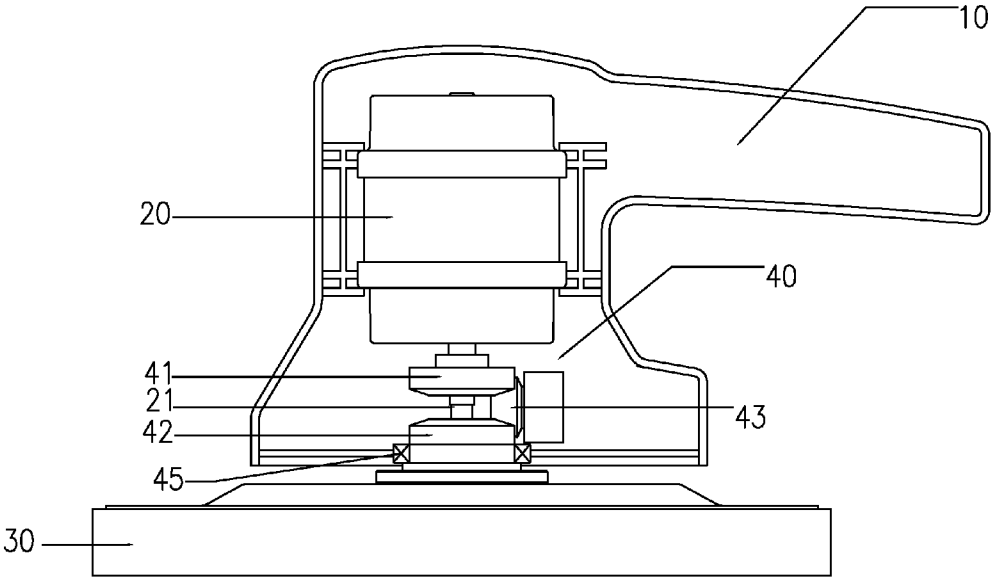

FIG. 3

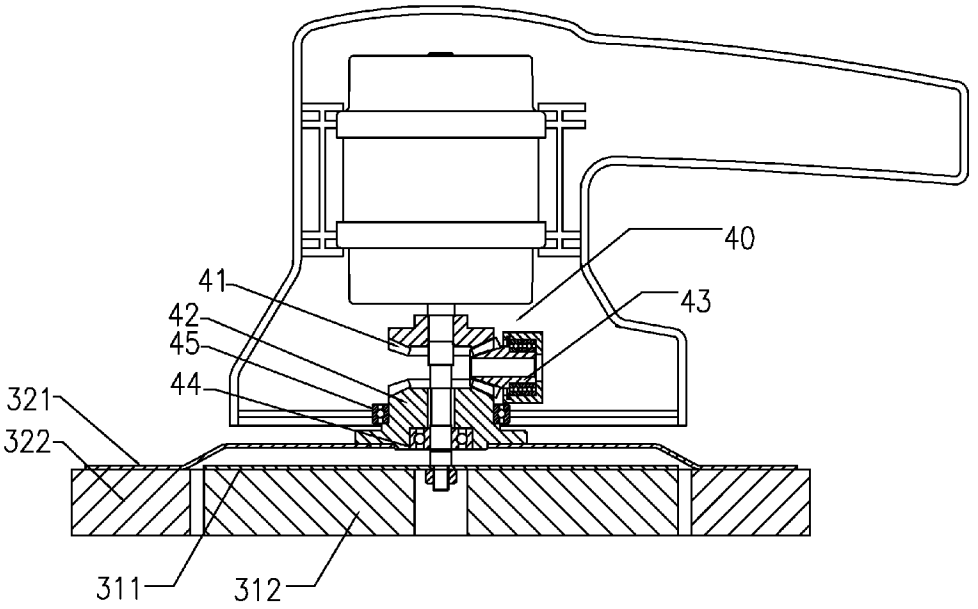

FIG. 4

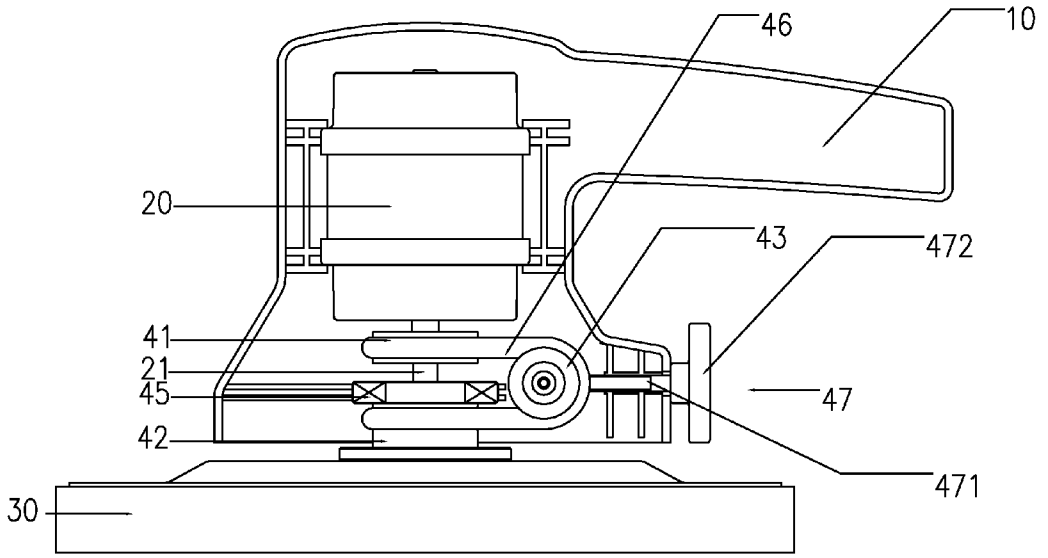
46
10
20
43
472
41
21
45
47
42
471
30

FIG. 5

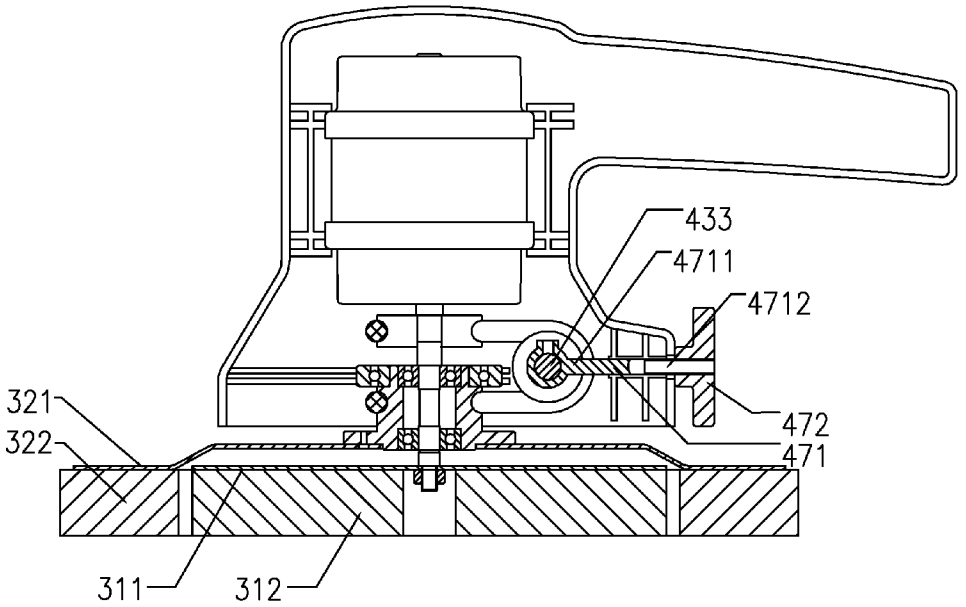
433
4711
4712
321
472
322
471
311
312

FIG. 6

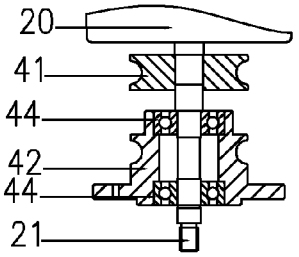

FIG. 7

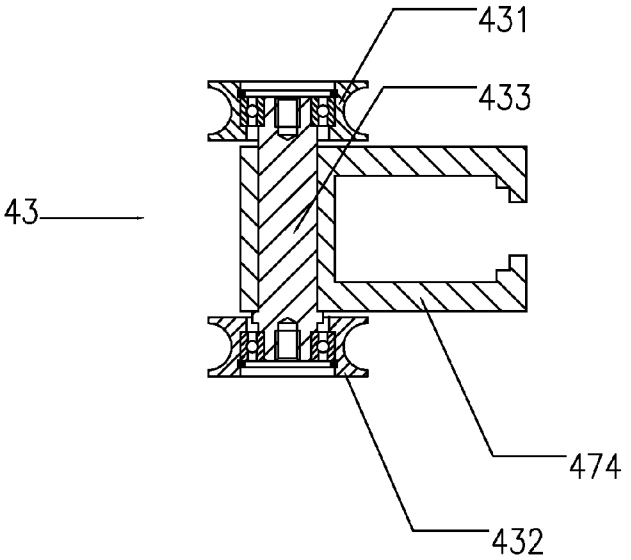

FIG. 8

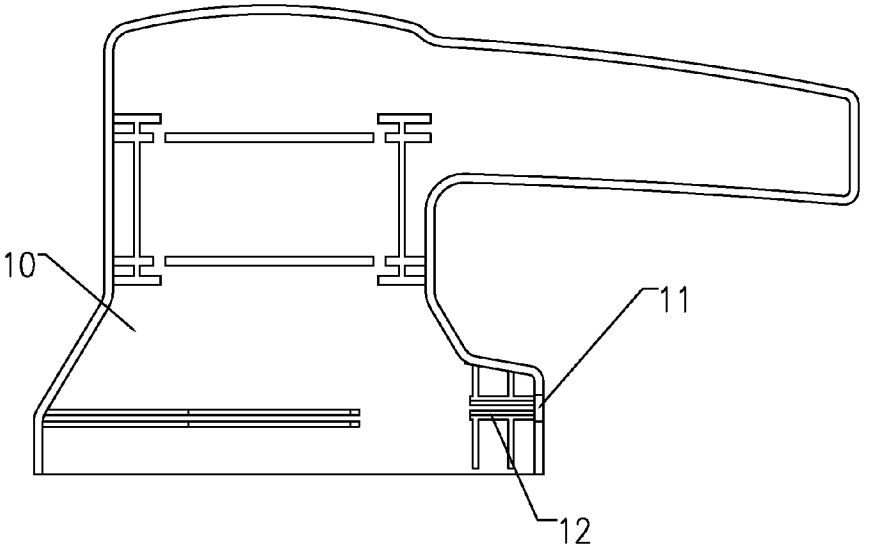

FIG. 9

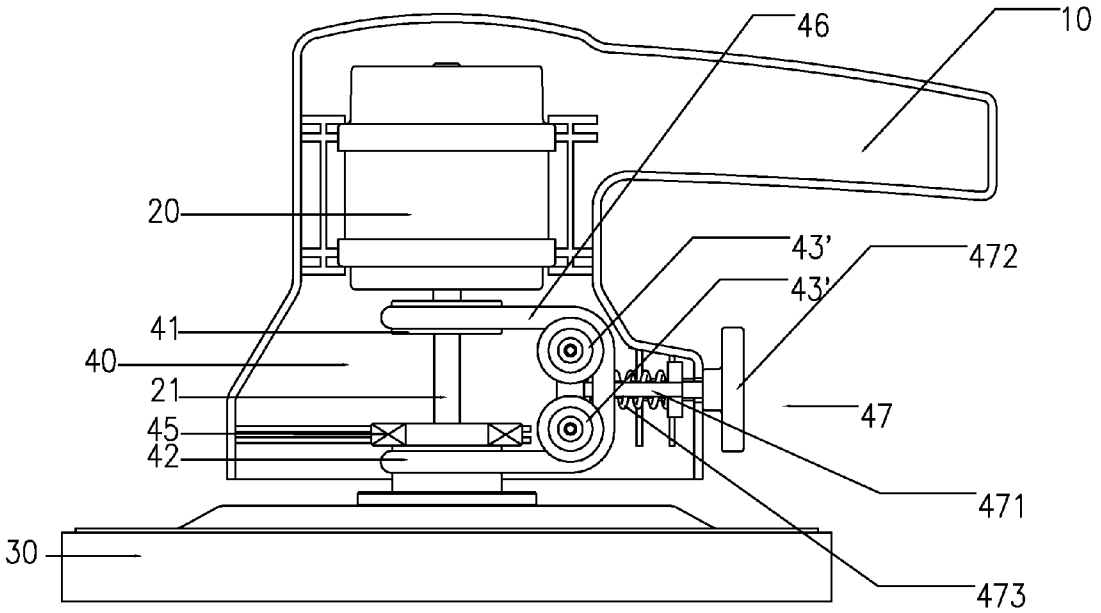

FIG. 10

COUNTER-ROTATING POLISHER

CROSS REFERENCE OF RELATED APPLICATION

This is a Continuation Application of an application having an application Ser. No. 12/946,826 filed on Nov. 15, 2010, which claims priority under 35 U.S.C. 119(a-d) to CN201010290569.8, filed on Sep. 20, 2010.

BACKGROUND OF THE PRESENT INVENTION

1. Field of Invention

The present invention relates to a polisher, and more particularly to a counter-rotating polisher.

2. Description of Related Arts

Polishers are used in many industries and occasions. Nowadays, a tray of a conventional polisher rotates towards a single direction, this kind of structure does not only have an inferior effect, but also runs unsteadily. Because of a reacting force of the polished object, the polisher is always under a single direction force in operating, so a person is needed to fix a position of the polisher, especially a long time operating will bring the person hands fatigue.

SUMMARY OF THE PRESENT INVENTION

A main object of the present invention is to provide a counter-rotating polisher which counter-rotating polishes at the same time, the reacting forces of the polishing object are counteracted, and does not need to fix specially.

Another object of the present invention is to provide a counter-rotating polisher which counter-rotating polishes at the same time, the polishing objects are polished in different directions, so that polishing effect is increased as comparing to the conventional polisher.

Another object of the present invention is to provide a counter-rotating polisher, the counter-rotating polisher is used in hands and provided for a long time operating, and the hands fatigue is reduced.

Another object of the present invention is to provide a counter-rotating polisher, the counter-rotating polisher has a long working life, the using effect is not declined by a longer working time.

Another object of the present invention is to provide a counter-rotating polisher, the counter-rotating polisher is simple in structure, cheap in costs and is suited to generalize in a large scale.

Accordingly, in order to accomplish the above objects, the present invention provides a counter-rotating polisher, comprising:

an enclosure;

an electric motor, comprising a driving axle, and fixed inside the enclosure;

a polishing arrangement, driven by the electric motor, comprising: a first polishing device, comprising a first fixed tray perpendicular to the driving axle and a first polishing material fixedly connected to an outer wall of the first fixed tray, and a second polishing device, comprising a second fixed tray perpendicular to the driving axle and a second polishing material fixedly connected to an outer wall of the second fixed tray, wherein a polishing surface of the first polishing material and a polishing surface of second polishing material are on a same plane and rotate coaxially and oppositely; and

a counter-rotating arrangement, comprising a first driving wheel connected to the driving axle and driven by the driving axle, a second driving wheel fixedly connected to the second fixed tray, and a change-direction wheel connected to the first driving wheel and the second driving wheel, wherein the first fixed tray is connected to the driving axle and driven by the driving axle to rotate the first polishing material positively, the change-direction wheel reversely transmits a rotation of the first driving wheel to the second driving wheel to rotate the second polishing material reversely.

With the foregoing structure, the first polishing material and the second polishing material polish oppositely at the same time, the polishing effect is increased, the reacting forces of the polishing object are counteracted, the working life of the counter-rotating polisher is prolonged.

These and other objectives, features, and advantages of the present invention will become apparent from the following detailed description, the accompanying drawings, and the appended claims.

BRIEF DESCRIPTION OF THE DRAWINGS

FIG. **1** is a side view of an inner structure of a counter-rotating polisher according to the present invention.

FIG. **2** is a side sectional view of the counter-rotating polisher according to the present invention.

FIG. **3** is a side view of an inner structure of the counter-rotating polisher according to a preferred embodiment of the present invention, illustrating connecting with gears.

FIG. **4** is a side sectional view of the counter-rotating polisher according to the above preferred embodiment of the present invention, illustrating connecting with gears.

FIG. **5** is a side view of an inner structure of the counter-rotating polisher according to another preferred embodiment of the present invention, illustrating connecting with a belt.

FIG. **6** is a side sectional view of the counter-rotating polisher according to the above preferred embodiment of the present invention, illustrating connecting with a belt.

FIG. **7** is a side sectional view of a first driving wheel and a second driving wheel of the counter-rotating polisher according to the above preferred embodiment of the present invention.

FIG. **8** is a top sectional view of a change-direction wheel of the counter-rotating polisher according to the above preferred embodiment of the present invention.

FIG. **9** is a side view of an enclosure of the counter-rotating polisher according to the above preferred embodiment of the present invention.

FIG. **10** is a side view of an inner structure of the counter-rotating polisher according to another preferred embodiment of the present invention.

DETAILED DESCRIPTION OF THE PREFERRED EMBODIMENT

Referring to FIG. **1** to FIG. **10** of the drawings, the present invention is a counter-rotating polisher, comprising: an enclosure **10**, an electric motor **20**, a polishing arrangement **30** and a counter-rotating arrangement **40**.

The electric motor **20** is fixed to the enclosure **10**, the electric motor **20** comprises a driving axle **21**.

The polishing arrangement **30** comprises a first polishing device **31** and a second polishing device **32**. The first polishing device **31** comprises a first fixed tray **311** and a first polishing material **312**. The first polishing material **312** is fixedly connected to an outer side of the first fixed tray **311**. The first fixed tray **311** is perpendicular to the driving axle **21**. The second polishing device **32** comprises a second fixed tray **321**, and a second polishing material **322** fixedly connected to an outer side of the second fixed tray **321**. The second fixed

tray **321** is perpendicular to the driving axle **21**. A polishing surface **313** of the first polishing material **312** and a polishing surface **323** of the second polishing material **322** are in a same plane and rotate coaxially and oppositely.

The counter-rotating arrangement **40** comprises a first driving wheel **41**, a second driving wheel **42**, and a change-direction wheel **43**. The first driving wheel **41** is connected to the driving axle **21** and driven by the driving axle **21**. The second driving wheel **42** is fixedly connected to the second fixed tray **321**. The change-direction wheel **43** is connected to the first driving wheel **41** and the second driving wheel **42**. The first fixed tray **311** is connected to the driving axle **21** and driven by the driving axle **21** to rotate the first polishing material **312** positively. The change-direction wheel **43** reversely transmits the rotation of the first driving wheel **41** to the second driving wheel **42** to rotate the second polishing material **322** reversely.

The reacting forces of the polished object created in polishing are counteracted through the opposite rotation of the first polishing material **312** and the second polishing material **322**, so when one operates the counter-rotating polisher of the present invention, it is no need to fix the counter-rotating polisher specially, especially for operating by hands, it's not easy to bring a person hands fatigue, so as to increase the work efficiency.

According to a preferred embodiment of the present invention, the counter-rotating arrangement **40** further comprises at least one bearing **44**. The first fixed tray **311** is fixed directly to the driving axle **21**, the bearing **44** is sleeved on the driving axle **21**, the second driving wheel **42** is connected to the bearing **44**, in such a manner that the first fixed tray **311** and the second fixed tray **312** rotate coaxially and oppositely. With the foregoing structure, the driving axle **21** directly drives the first fixed tray **311** to rotate positively, and because of the act of the bearing **44**, the second driving wheel **42** does not rotate directly along with the driving axle **21**. At the same time, the driving axle **21** drives the first driving wheel **41** to rotate, the change-direction wheel **43** is driven by the driving axle **21** and acts on the second driving wheel **42** to rotate the second driving wheel **42** oppositely to the first driving wheel **41**, so that the second fixed tray **321** and the first fixed tray **311** are driven to rotate coaxially and oppositely.

Concretely, the counter-rotating arrangement **40** further comprises a reinforced bearing **45**, which is mounted between the second driving wheel **42** and the enclosure **10** to make the second driving wheel **42** run smoothly and increase a rigidity of the driving axle **21** of the electric motor **20**.

Referring to FIG. **3** to FIG. **4**, according to a preferred embodiment of the present invention, the first driving wheel **41** and the second driving wheel **42** are set in parallel and perpendicular to the change-direction wheel **43**, and the change-direction wheel **43** is rotatablely mounted on the enclosure **10**. The first driving wheel **41** and the second driving wheel **42** are respectively mounted on an upper end and a lower end of the change-direction wheel **43** to connect to the change-direction wheel **43** by wheel teeth, an aim that a rotation of the first driving wheel **41** is reversely transmitted to the second driving wheel **42** is achieved through a theory that the running directions of an upper side and a lower side of the change-direction wheel **43** are opposite.

Referring to FIG. **5** to FIG. **7**, according to another preferred embodiment of the present invention, concretely, the counter-rotating arrangement **40** further comprises a belt **46**. The first driving wheel **41** and the second driving wheel **42** are set in parallel and perpendicular to the change-direction wheel **43**, and the change-direction wheel **43** is rotatablely mounted on the enclosure **10**. The belt **46** is sleeved on the first driving wheel **41**, extends to the change-direction wheel **43**, extends back to the second driving wheel **42** and is sleeved on the second driving wheel **42** after rounding the change-direction wheel **43** to change a running direction of the belt **46** through the change-direction wheel **43**, so that the first driving wheel **41** and the second driving wheel **42** rotate coaxially and oppositely.

To the persons skilled in the art, it's easy to know that because of the electric motor **20** is mounted on the enclosure **10**, a same effect would be achieved by connecting the change-direction wheel **43** to the electric motor **20** but not connecting to the enclosure **10**, so it is within the scope of the present invention.

Referring to FIG. **8**, concretely, the change-direction wheel **43** comprises a first part **431** and a second part **432**. The first part **431** and the second part **432** rotate coaxially and oppositely. The first part **431** and the second part **432** are respectively positioned on two sides of the first driving wheel **41** and the second driving wheel **42** to take over the belt **46** which is extended to the two sides to rotate oppositely under the rotation of the first driving wheel **41**, so the rotation is reversely transmitted to the second driving wheel **42**.

According to preferred embodiments of the present invention, the first part **431** and the second part **432** are embodied as two wheels that pass through the same rotating axle **433**, and the rotating axle **433** is fixed to the enclosure **10**; or the first part **431** comprises a projecting rotating axle **433**, and the second part **432** is sleeved on the rotating axle **433** of the first part **431** to rotate oppositely. Persons skilled in the art will think of the other similar structures easily, and the other similar structures should not be seemed to break away from the scope of the present invention.

According to a preferred embodiment of the present invention, a diameter of the change-direction wheel **43** is equal to a distance between the first driving wheel **41** and the second driving wheel **42**, the first driving wheel **41** and the second driving wheel **42** are respectively perpendicular to the upper end and the lower end of the change-direction wheel **43** to make a part of the belt **46** which is extended from the first driving wheel **41** to the change-direction wheel **43** and another part of the belt **46** which is extended from the change-direction wheel **43** to the second driving wheel **42** in parallel, a running direction of the belt **46** and the rotation directions of the first driving wheel **41** and the second driving wheel **42** are in a line. With the foregoing structure, the belt **46** is sleeved steadily on the first driving wheel **41** and the second driving wheel **42** to avoid unnecessary rub, an efficiency of transmission is increased, the working life is prolonged.

Referring to FIG. **10**, according to another preferred embodiment of the present invention, the counter-rotating arrangement **40** comprises two change-direction wheels **43'**, the first driving wheel **41** and the second driving wheel **42** are set in parallel, the two change-direction wheel **43'** are set side by side, respectively perpendicular to and aligned with the first driving wheel **41** and the second driving wheel **42**, so that the part of the belt **46** which is extended from the first driving wheel **41** to the change-direction wheel **43'** and the another part of the belt **46** which is extended from the change-direction wheel **43'** to the second driving wheel **42** in parallel.

According to a preferred embodiment of the present invention, the counter-rotating arrangement **40** further comprises an adjusting unit **47**. The enclosure **10** has a through-hole **11**, wherein the adjusting unit **47** comprises an adjusting lever **471** mounted on the enclosure **10** through the through-hole **11**, the adjusting lever **471** has an inner end **4711** which is connected to the change-direction wheel **43**, the adjusting lever **471** is able to move from the first driving wheel **41** to the

change-direction wheel **43** along the belt **46** to adjust a tightness degree of the belt **46** through changing a distance between the change-direction wheel **43** and the first driving wheel **41** and the second driving wheel **42**. With the foregoing structure, the belt **46** is tightened when becoming loose in using, so that the transmission effect of the counter-rotating arrangement **40** is assured, the working life of the counter-rotating polisher is prolonged, meanwhile, the enclosure **10** is not needed to be opened in the adjusting operation, which is easy to operate and cheap in cost.

Concretely, the adjusting unit **47** further comprises an adjusting knob **472** mounted on the enclosure **10**. The adjusting lever **471** has an outer end **4712** connected to the adjusting knob **472** via a screw thread, when one screws the adjusting knob **472**, the degree of tightness of the belt **46** will be adjusted through adjusting a position of the adjusting lever **471**.

Concretely, according to preferred embodiments of the present invention, the connecting types of the adjusting lever **471** and the rotating axle **433** can be embodied that the inner end **4711** of the adjusting lever **471** is fixedly connected to the rotating axle **433**, the first part **431** and the second part **432** are respectively rotate coaxially and oppositely with respect to the rotating axle **433**, or the rotating axle **433** is received in the inner end **4711** of the adjusting lever **471** through a bearing and rotates relatively.

Referring to FIG. **9**, further more, in the above connecting type that the adjusting lever **471** is fixedly connected to the rotating axle **433**, the enclosure **10** has two sliding grooves **12** provided along a moving direction of the adjusting lever **471**, two ends of the rotating axle **433** are respectively received in the two sliding grooves **12** to move along the two sliding grooves **12** when adjusting the belt **46** to increase a stability of the adjusting unit **47**.

According to another preferred embodiment of the present invention, the adjusting unit **47** further comprises a support frame **474** and an adjusting spring **473**, the support frame **474** is mounted on the adjusting lever **471**, is able to slide along the adjusting lever **471**, and is fixedly connected to the change-direction wheel **43**, preferably, is fixedly connected to the rotating axle **433**. The adjusting spring **473** is mounted on the adjusting lever **471** and compressed between the support frame **474** and the inner end **4711** of the adjusting lever **471**. With the foregoing structure, when the adjusting lever **471** is positioned in a particular position, the adjusting spring **473** acts on the support frame **474** and pushes off the support frame **474** from the inner end **4711** of the adjusting lever **471** to tighten the belt **46**. The adjusting spring **473** is able to adjust the degree of tightness of the belt **46** within a predetermined range, even the belt **46** becomes loose by using.

According to another preferred embodiment of the present invention, the adjusting unit **47** comprises an adjusting spring **473** mounted between the enclosure **10** and the change-direction wheel **43**. The adjusting spring **473** is stretched from the first driving wheel **41** to the change-direction wheel **43** along the belt **46**, and creates a force to pull the change-direction wheel **43** away from the first driving wheel **41** and the second driving wheel **42** to tighten the belt **46**. The enclosure **10** has two sliding grooves **12** provided along a stretching direction of the adjusting spring **473**, the two ends of the rotating axle **433** are respectively received in the two sliding grooves **12** to move along the two sliding grooves **12** when adjusting the belt **46** to increase a stability of the adjusting unit **47**.

To the persons skilled in the art, it's easy to think of that the adjusting spring **473** adopts a similar structure with the support frame **474**, without using the adjusting lever **471**, the effect of adjusting the belt **46** can also be achieved by compressing the adjusting spring **473** instead of stretching the adjusting spring **473**.

It will thus be seen that the objects of the present invention have been fully and effectively accomplished. Its embodiments have been shown and described for the purposes of illustrating the functional and structural principles of the present invention and is subject to change without departure from such principles. Therefore, this invention includes all modifications encompassed within the spirit and scope of the following claims.

What is claimed is:

1. A counter-rotating polisher, comprising:

an enclosure;

an electric motor, fixed inside said enclosure, and comprising a driving axle;

a polishing arrangement, driven by said electric motor, comprising a first polishing device, comprising a first fixed tray perpendicular to said driving axle and a first polishing material fixedly connected to an outer wall of said first fixed tray, and a second polishing device, comprising a second fixed tray perpendicular to said driving axle and a second polishing material fixedly connected to an outer wall of said second fixed tray, wherein a polishing surface of said first polishing material and a polishing surface of second polishing material are on a same plane and rotate coaxially and oppositely; and

a counter-rotating arrangement, comprising a first driving wheel connected to said driving axle and driven by said driving axle, a second driving wheel fixedly connected to said second fixed tray, and a change-direction wheel connected to said first driving wheel and said second driving wheel, wherein said first fixed tray is connected to said driving axle and driven by said driving axle to rotate said first polishing material positively, said change-direction wheel reversely transmits a rotation of said first driving wheel to said second driving wheel to rotate said second polishing material oppositely,

wherein said first polishing material and said second polishing material have predetermined sizes to produce approximately equal but opposite reacting forces on a polished object to be counteracted to stabilize said counter-rotating polisher;

wherein said counter-rotating arrangement further comprises a bearing, said first fixed tray is fixed directly to said driving axle, said bearing is sleeved on said driving axle, said second driving wheel is connected to said bearing, in such a manner that said second driving wheel does not rotate along with said driving axle directly to make said first fixed tray and said second fixed tray rotate coaxially and oppositely;

wherein said counter-rotating arrangement further comprises a reinforced bearing, which is mounted between said second driving wheel and said enclosure to make said second driving wheel run smoothly and increase a rigidity of said driving axle of said electric motor;

wherein said first driving wheel and said second driving wheel are set in parallel and perpendicular to said change-direction wheel, said change-direction wheel is rotatably mounted on said enclosure, said first driving wheel and said second driving wheel are respectively mounted on an upper end and a lower end of said change-direction wheel to connect to said change-direction wheel by wheel teeth, wherein a rotation of said first driving wheel is reversely transmitted to said second

driving wheel because the running directions of an upper side and a lower side of said change-direction wheel are opposite; and

wherein said electric motor is aligned coaxially with said first driving wheel and said second driving wheel.

* * * * *