W. L. McFARLAND.

CONCRETE MIXER AND SPREADER.

APPLICATION FILED JUNE 1, 1912.

1,070,156.

Patented Aug. 12, 1913.

4 SHEETS—SHEET 1.

Fig. 1

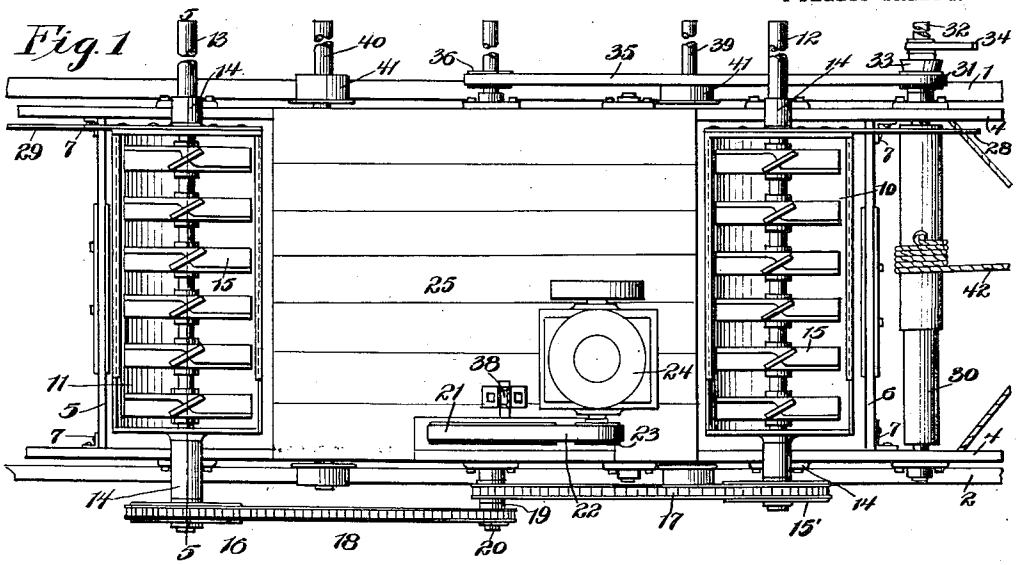

Fig. 2

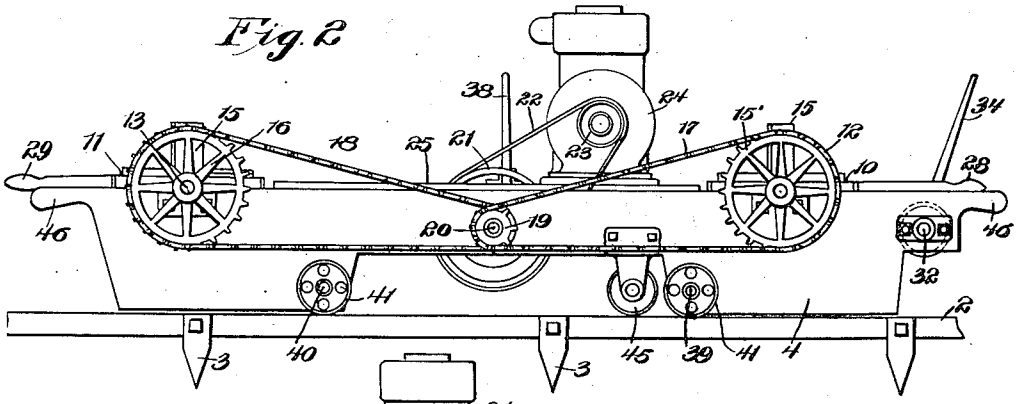

Fig. 3

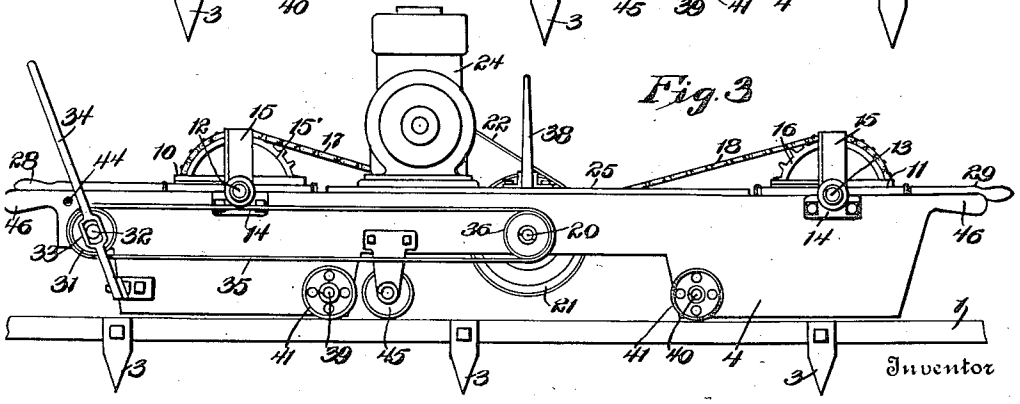

Witnesses

Wm. H. Mulligan.

R. M. Smith.

Inventor

William L. McFarland.

By Victor J. Evans

Attorney

W. L. McFARLAND.

CONCRETE MIXER AND SPREADER.

APPLICATION FILED JUNE 1, 1912.

1,070,156. Patented Aug. 12, 1913.

4 SHEETS—SHEET 2.

Fig. 4.

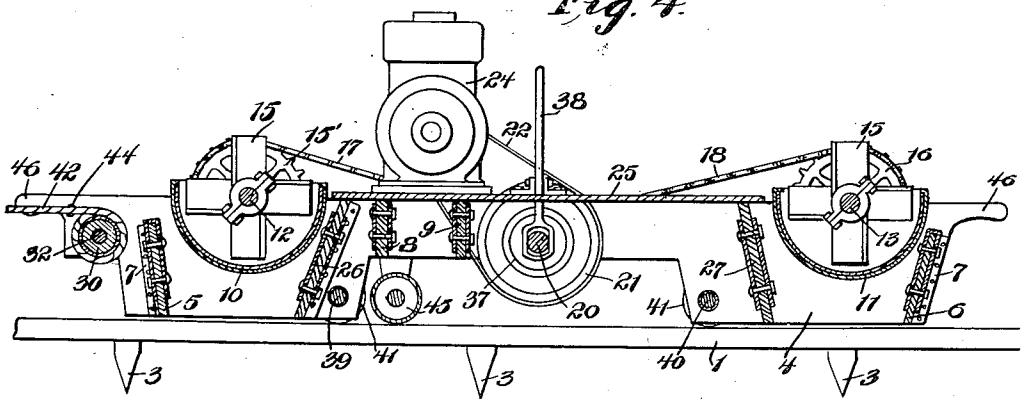

Fig. 5.

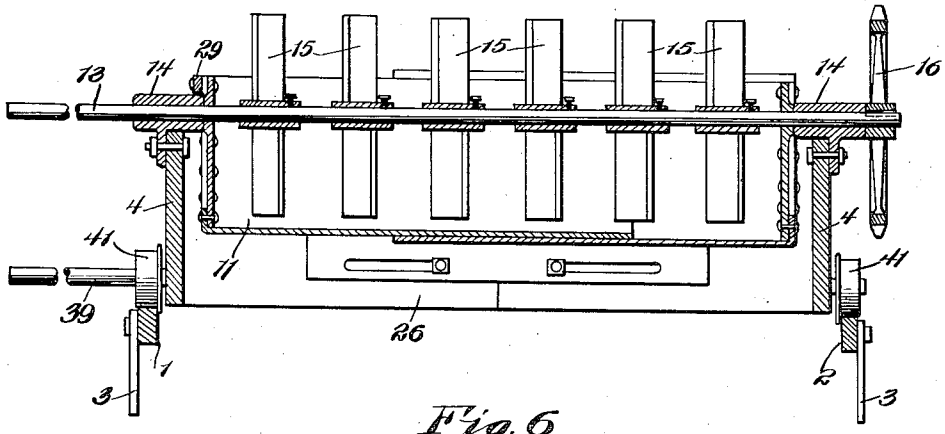

Fig. 6.

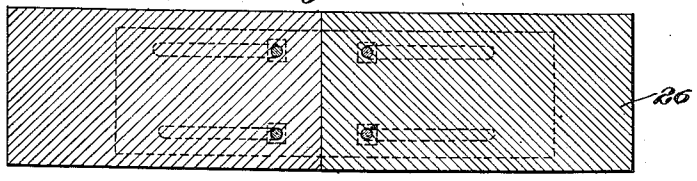

Witnesses

Wm. F. Mulligan.

R. M. Smith.

Inventor

William L. McFarland

By Victor J. Evans.

Attorney

W. L. McFARLAND.

CONCRETE MIXER AND SPREADER.

APPLICATION FILED JUNE 1, 1912.

1,070,156.

Patented Aug. 12, 1913.

4 SHEETS—SHEET 3.

Fig. 7.

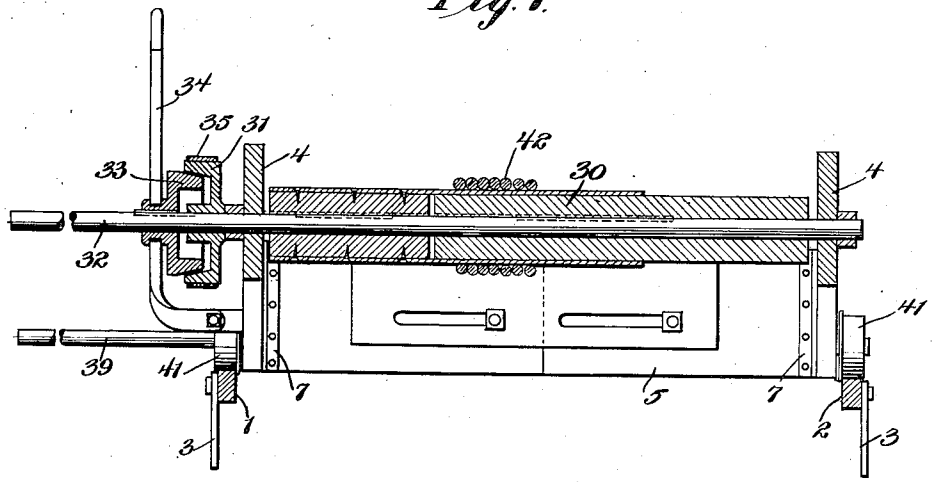

Fig. 8.

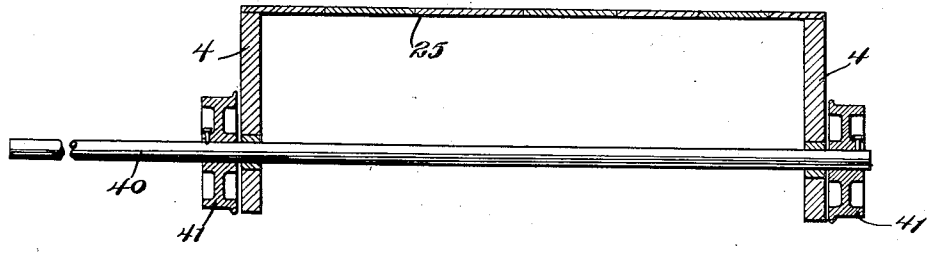

Fig. 9

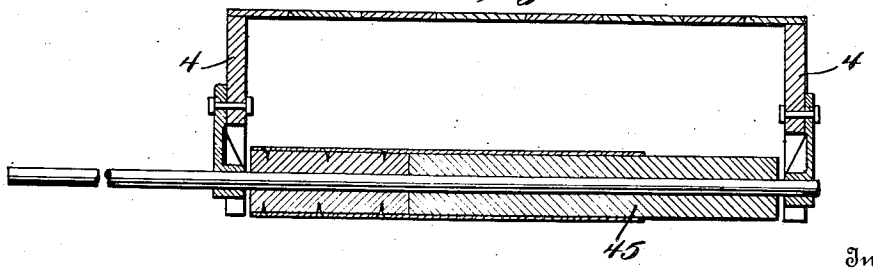

Witnesses

Wm. A. Mulligan.

R. M. Smith.

Inventor

William L. McFarland.

By Victor J. Evans.

Attorney

W. L. McFARLAND.

CONCRETE MIXER AND SPREADER.

APPLICATION FILED JUNE 1, 1912.

1,070,156. Patented Aug. 12, 1913.

4 SHEETS—SHEET 4.

Fig. 10

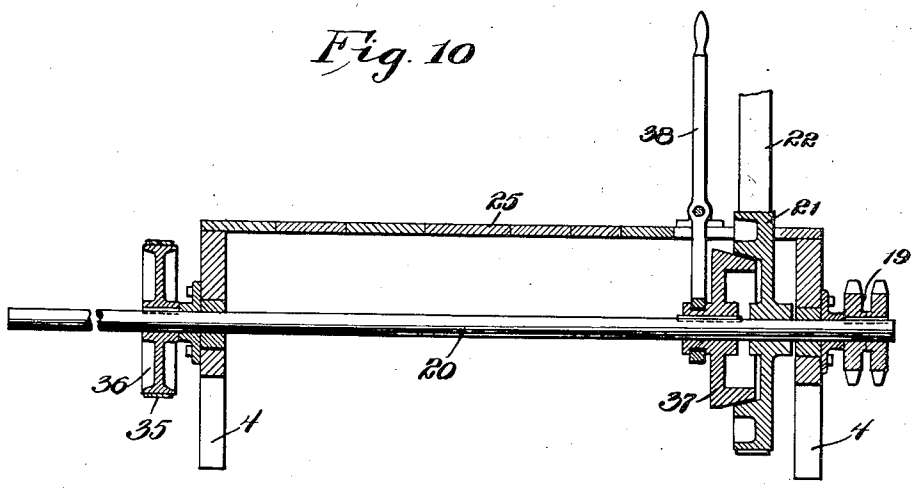

Fig. 11

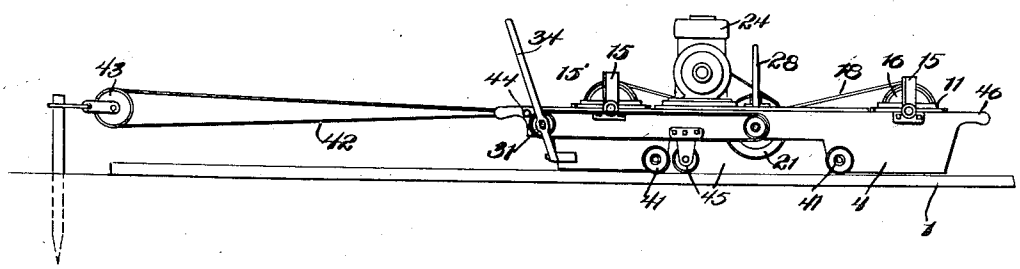

Witnesses

Wm. H. Mulligan.

P. M. Smith.

Inventor

William L. McFarland.

By Victor J. Evans

Attorney

UNITED STATES PATENT OFFICE.

WILLIAM L. McFARLAND, OF FAIRFIELD, ILLINOIS.

CONCRETE MIXER AND SPREADER.

1,070,156. Specification of Letters Patent. Patented Aug. 12, 1913.

Application filed June 1, 1912. Serial No. 700,990.

To all whom it may concern:

Be it known that I, WILLIAM L. McFARLAND, a citizen of the United States, residing at Fairfield, in the county of Wayne and State of Illinois, have invented new and useful Improvements in Concrete Mixers and Spreaders, of which the following is a specification.

This invention relates to concrete mixing and spreading machines, the object in view being to provide a machine in which the ingredients of the concrete are mixed in a thorough and expeditious manner, and by means of which the concrete, while in a plastic condition, may be laid and spread by the machine, as it is moved along, the machine embodying a motor which actuates the mixing elements and also propels the machine periodically under the manual control of the operator.

A further object of the invention is to provide a machine of such construction that it may be laterally expanded and contracted in accordance with the width of the walk being laid.

By means of the construction hereinafter described, a large amount of labor and time, as well as material is saved.

With the above and other objects in view, the invention consists in the construction, combination and arrangement of parts, as will be hereinafter more fully described, illustrated in the accompanying drawings, and pointed out in the claims hereunto appended.

In the drawings: Figure 1 is a plan view of the machine. Fig. 2 is a side elevation of the same, looking toward the chain side. Fig. 3 is a side elevation taken from the opposite side. Fig. 4 is a vertical longitudinal section through the machine. Fig. 5 is a cross section on the line 5—5 of Fig. 1. Fig. 6 is a longitudinal section of one of the cross bars. Fig. 7 is a longitudinal section of the winding drum and clutch. Fig. 8 is a longitudinal section of one of the truck axles. Fig. 9 is a longitudinal section through the compressing roller. Fig. 10 is a detail section of the clutch of the counter shaft. Fig. 11 is a reduced side elevation of the machine, showing the arrangement of the draft cable.

The machine, as a whole, is supported upon and adapted to move lengthwise of a pair of parallel guide rails 1 and 2, each of which is supported and held fixed by means of a plurality of legs 3, pointed as shown and adapted to be driven into the ground at opposite sides of the walk or other surface to be laid in concrete.

The rails are, of course, located at a distance apart equal to the width of the machine and the walk to be laid, and in addition to their function as guide rails for the truck, they serve as lateral gages for the concrete, as it is dumped from the machine and spread, and also as depth gages for regulating the depth or thickness of the concrete, and the height of the top surface thereof from the foundation.

The machine comprises main longitudinal side bars 4, connected by the front and rear end cross bars 5 and 6, respectively, the said cross bars being connected to the side bars by angle corner braces 7. Additional cross bars 8 and 9 connect the side bars 4, at points intermediate the end cross bars 5 and 6, the latter being slanted in a forward direction, and the bottom edges thereof acting as scrapers or spreaders, by being located directly in rear of the dumping troughs, hereinafter particularly described.

In order to provide for the lateral expansion and contraction of the frame of the machine, and in order to adapt the machine to work of different widths, all of the cross bars are made telescopic, or in other words, each of said bars consists of overlapping and relatively slidable sections, together with clamping means, such as bolts, for holding the same at the desired adjustment, as illustrated in the drawings.

Arranged near the front of the machine is a semi-cylindrical trough 10, while another similar trough 11 is arranged near the rear of the machine. These troughs are journaled upon shafts 12 and 13, extending transversely of the machine and journaled in suitable bearings 14. Each of said shafts carries a plurality of mixing blades 15, which revolve continuously in the composition contained in the troughs and thoroughly mix the same, preparatory to the dumping of said material from the machine. Any desired number of these rotating blades may be employed, and any suitable speed may be imparted thereto.

On one end of the shaft 12 is mounted a sprocket wheel 15′, while on the shaft 13 is mounted a sprocket wheel 16. From these sprocket wheels inwardly extending chains 17 and 18 pass around a centrally

located sprocket wheel 19 on the projecting end of a counter shaft 20, whereby motion is imparted to both of the shafts 12 and 13, when the counter shaft 20 is revolved.

Mounted loosely on the counter shaft 20 is a belt wheel 21, from which a belt 22 extends around a pulley 23 on the shaft of a motor 24 mounted on the deck 25 covering the frame of the machine, and extending from a cross bar 26 to another cross bar 27 arranged just in front of the rear trough 11. This motor may be of the gasolene or electric or other type, as may be found most expedient.

Connected to the forward trough 10 is a hand lever 28, by means of which said trough may be turned over for dumping the contents thereof through the bottom of the machine. The rear trough 11 is equipped with a corresponding hand lever 29, to be used for the same purpose, namely, to dump the rear trough 11.

Arranged in front of the forward trough 10 is a cable drum 30 journaled in suitable bearings on the side bars 4 of the frame, and provided at one end with a pulley wheel 31 normally loose thereon, but adapted to be thrown into engagement with the shaft 32 of the drum 30 by means of a clutch 33, shifted by means of a hand lever 34.

From the wheel 31 a belt 35 passes rearward around a pulley 36 on the projecting end of the counter shaft 20. Another clutch 37 is employed to throw the belt wheel 21 into and out of engagement with the shaft 20, said clutch being controlled by a hand lever 38. The machine is provided with a pair of axles 39 and 40, upon which are mounted truck wheels 41 which travel on the rails 1 and 2, hereinabove referred to. A draft cable 42 winds upon the drum 30 at one end, and extends forward around a pulley 43 mounted at a suitable point in advance of the machine, the cable passing from said pulley 43 back to the truck to which it is connected, at the points 44.

It will be understood from the foregoing, that the motor drives the counter shaft 20, which in turn drives the shaft 32 of the drum, when the clutch 33 is thrown in, and in this way the machine, as a whole, is propelled or drawn along the ground, as the concrete is dumped from the troughs, thereby permitting the cross bars 26 and 6 to spread the concrete evenly and uniformly upon the ground, and level up the top surface thereof.

45 designates a compressing roller which is journaled in bearings in the side bars 4 of the machine frame, and arranged at a suitable elevation to roll down the surface of the concrete compactly, after it has been acted upon by the spreader bars, said roller being arranged between the front and rear troughs, as shown. To facilitate the lifting and handling of the machine, the side bars 4 terminate in suitable handles 46.

By further reference to the drawings, it will now be seen that all of the cross bars of the frame, as well as the several cross shafts, axles, troughs, and cable drum are made telescopic, or in other words, each of said parts comprises overlapping and relatively slidable members or sections, as clearly shown in the drawings, this being done to enable the machine, as a whole, to be expanded and contracted laterally in accordance with the width of the work to be performed by the machine.

Cement, sand and gravel, or any other suitable ingredients are dumped into the troughs and subjected to the action of the mixing mechanism, first in a dry state, water being subsequently added in the proper quantity, to bring the mixture to a plastic or proper condition. The mixing troughs are then reversed or dumped one at a time, by means of the dumping levers described, after which the troughs are returned to their receiving positions for other batches of material. The clutch 33 is then thrown in, which causes the motor to take up and actuate the drum 30, thereby feeding the machine forward along the guide rails 1 and 2, spreading, leveling and rolling down the material, and it will be noted that the rails also form fenders or level gages for the concrete, as it is laid and rolled, and also serve as depth gages, by reason of the wheels 41 traveling upon said rails. The operation, above referred to, is continued and repeated until the concrete walk is laid, thereby saving a large amount of labor and time, and effecting the utmost economy in the material used.

What is claimed is:

1. In a concrete mixing and spreading machine, a truck, a motor mounted thereon, a rotary mixer embodying a horizontal shaft extending transversely of the truck and geared to the motor, a semi-cylindrical mixing trough journaled on the shaft of the rotary mixer, means for turning and dumping said trough, and concrete spreading means.

2. In a concrete mixing and spreading machine, a truck, a motor mounted thereon, a rotary mixer embodying a horizontal shaft extending transversely of the truck and geared to the motor, a semi-cylindrical mixing trough journaled on the shaft of the rotary mixer, means for turning and dumping the trough, concrete spreading means, and a manually controlled clutch for throwing the mixer into and out of operative connection with the motor.

3. In a concrete mixing and spreading machine, a truck embodying a laterally expansible frame, a motor mounted thereon, a rotary mixer embodying a horizontal shaft extending transversely of the truck frame

and geared to the motor, a longitudinally extensible semi-cylindrical dumping mixing trough journaled on said shaft, and concrete spreading means.

4. In a concrete mixing and spreading machine, a truck embodying a laterally expansible frame, a motor mounted thereon, a rotary mixer embodying a horizontal shaft extending transversely of the truck frame and geared to the motor, a longitudinally extensible semi-cylindrical dumping mixing trough journaled on said shaft, and a longitudinally extensible spreader.

5. In a concrete mixing and spreading machine, a truck embodying a laterally expansible frame, a motor mounted thereon, a rotary mixer embodying a horizontal shaft extending transversely of the truck frame and geared to the motor, a longitudinally extensible semi-cylindrical dumping mixing trough journaled on said shaft, concrete spreading means, and a longitudinally extensible roller.

In testimony whereof I affix my signature in presence of two witnesses.

WILLIAM L. McFARLAND.

Witnesses:
B. F. Thomas,
Thos. H. Creighton.