(12) INTERNATIONAL APPLICATION PUBLISHED UNDER THE PATENT COOPERATION TREATY (PCT)

(19) World Intellectual Property Organization
International Bureau

(43) International Publication Date
2 October 2014 (02.10.2014)

WIPO | PCT

(10) International Publication Number
WO 2014/160845 A1

(51) International Patent Classification:
A23L 3/32 (2006.01) *C25B 11/10* (2006.01)
C25B 11/08 (2006.01)

(21) International Application Number:
PCT/US2014/031986

(22) International Filing Date:
27 March 2014 (27.03.2014)

(25) Filing Language: English

(26) Publication Language: English

(30) Priority Data:
61/805,650 27 March 2013 (27.03.2013) US

(71) Applicant: **BNR TECHNOLOGY DEVELOPMENT, LLC** [US/US]; 13843 Hwy 105, Suite 209, Conroe, TX 77304 (US).

(72) Inventor: **NORRIS, Jeffrey, B.**; 3035 Fitzgerald, Montgomery, TX 77356 (US).

(74) Agent: **LOCKLAR, Michael**; Adolph Locklar, 4615 SW Freeway, Suite 630, Houston, TX 77027 (US).

(81) Designated States *(unless otherwise indicated, for every kind of national protection available)*: AE, AG, AL, AM, AO, AT, AU, AZ, BA, BB, BG, BH, BN, BR, BW, BY, BZ, CA, CH, CL, CN, CO, CR, CU, CZ, DE, DK, DM, DO, DZ, EC, EE, EG, ES, FI, GB, GD, GE, GH, GM, GT, HN, HR, HU, ID, IL, IN, IR, IS, JP, KE, KG, KN, KP, KR, KZ, LA, LC, LK, LR, LS, LT, LU, LY, MA, MD, ME, MG, MK, MN, MW, MX, MY, MZ, NA, NG, NI, NO, NZ, OM, PA, PE, PG, PH, PL, PT, QA, RO, RS, RU, RW, SA, SC, SD, SE, SG, SK, SL, SM, ST, SV, SY, TH, TJ, TM, TN, TR, TT, TZ, UA, UG, US, UZ, VC, VN, ZA, ZM, ZW.

(84) Designated States *(unless otherwise indicated, for every kind of regional protection available)*: ARIPO (BW, GH, GM, KE, LR, LS, MW, MZ, NA, RW, SD, SL, SZ, TZ, UG, ZM, ZW), Eurasian (AM, AZ, BY, KG, KZ, RU, TJ, TM), European (AL, AT, BE, BG, CH, CY, CZ, DE, DK, EE, ES, FI, FR, GB, GR, HR, HU, IE, IS, IT, LT, LU, LV, MC, MK, MT, NL, NO, PL, PT, RO, RS, SE, SI, SK, SM, TR), OAPI (BF, BJ, CF, CG, CI, CM, GA, GN, GQ, GW, KM, ML, MR, NE, SN, TD, TG).

Published:

— *with international search report (Art. 21(3))*

— *before the expiration of the time limit for amending the claims and to be republished in the event of receipt of amendments (Rule 48.2(h))*

(54) Title: EXTENDING THE SHELF LIFE OF LIQUID COMESTIBLES

FIG. 1

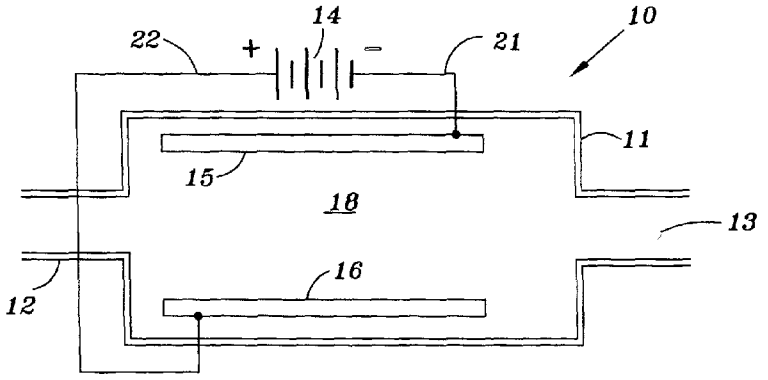

(57) Abstract: The shelf life of a comestible liquid is prolonged by passing the liquid through an electrolytic cell. Electric current travels from one electrode to the other through the liquid. The electric current destroys bacteria present in the liquid. The current causes the osmotic balance of the bacteria cells to be disrupted causing the cell to either implode or explode.

WO 2014/160845 A1

EXTENDING THE SHELF LIFE OF LIQUID COMESTIBLES

INVENTOR: JEFFREY B. NORRIS

This application claims the priority of U.S. provisional application serial number 61/805,650 filed March 27, 2013.

BACKGROUND OF INVENTION

1. Field of the Invention

[0001] This invention relates to a method of treating liquid comestibles, for example, fruit juices, in order to improve their shelf life.

2. Description of Related Art

[0002] It is well know that fruit juices such as orange juice prepared for retail sales have a limited shelf life. The juice becomes darker in color and loses flavor due to, for example, oxide deterioration. So called "fresh orange juice" is prepared by extracting juice from oranges at harvest time and storing it in large vats. Typically, free oxygen in the juice is removed and the juice is pasteurized at temperatures about 185-201 degrees Fahrenheit. These treatments result in flavor loss such that flavoring is added to the juice after pasteurization. Different manufacturers prepare different "flavor packs" so that the flavor varies from brand to brand. One prior art solution to this problem is to deoxidize the comestible by generating hydrogen in an electrolytic cell that has a permeable membrane separating the anode and cathode sections from each other. The anode compartment contains a highly dissociatable, non-oxidizable inorganic acid electrolyte. When the cell is connected to a suitable source of electric power, hydrogen is formed at the cathode to remove the oxygen from the juice. See U.S. Patent No. 4,374,714 to Hebral, granted February 22, 1983, the entire contents of which is incorporated herein by reference.

[0003] Another approach is taught by the U.S. Patent No. 4,857,343 to Herbral issued August 15, 1989. This patent teaches the concept of lowering the pasteurization temperature required for orange juice by lowering the pH of the fruit juice. The high temperature of pasteurization causes carmelization or darkening of the juice which is undesirable.

[0004] Pasteurization destroys bacteria and bacterial enzymes which promote bacterial growth. Bacteria and bacterial enzymes are believed to contribute to the

discoloring of the liquid and the sour taste associated with aging liquid comestibles such as milk and fruit juices. Pasteurization also inactivates certain enzymes which causes the pulp to separate from the juice. This process has also been found to deter the tendency of pulp in orange juice from increasing in density as it ages.

BRIEF SUMMARY OF THE INVENTION

[0005] The present invention prolongs the shelf life of fruit juices such as orange juice by destroying bacteria and possibly the bacterial enzymes by subjecting the juice to an electrical current.

[0006] Electrical current has been found to be effective in killing bacteria. See for example, U.S. Patent No. 5,922,209 to Yoshida et al granted July 13, 1999 and U.S. Patent No. 5,948,273 to Yoshida et al granted September 7, 1999. The phenomenon is also discussed in "Effects of Micro Amperage, Medium and Bacterial Concentration on Ionlophoretic Killing of Bacteria in Fluid," CP Davis et al, Department of Microbiology, University of Texas, Medical Branch, Galveston, Antimicrobial Agent and Chemotherapy, April 1989, pages 442 – 447.

[0007] The juice to be treated is introduced into an electrolytic cell where electrical current within the cell destroys the bacteria in the juice.

BRIEF DESCRIPTION OF THE SEVERAL VIEWS OF THE DRAWING(S)

[0008] FIG. 1 illustrates an embodiment of a fluid processing system suitable for carrying out an embodiment of the method according to the invention.

DETAILED DESCRIPTION OF THE INVENTION

[0009] Referring to FIG. 1, the method according to an embodiment of the invention can be practiced as follows. The comestible fluid to be treated is introduced through an inlet 12 into an electrolytic cell 10 which includes a housing 11 which has an interior chamber 18. A pair of electrodes 15 and 16 are located within the housing and are connected to a source of power 14 via wires 21 and 22 or the like. Power source 14 is preferable a direct current power source.

[0010] In order to prevent damage to the good components of the juice, the current should be kept to the minimum amount necessary to kill the bacteria without adversely affecting the other components. It is also desirable to use noble electrodes to avoid releasing metallic ions into the juices. The use of inert electrodes made of a thin titanium plate coated with a ruthenium coating performed extremely well. They

stopped the release of ions in the juice while allowing sufficient current to only destroy the bacteria.

[0011] Treated juice is removed from the cell via outlet 13 for further handling. Inlet 12 and outlet 13 may contain valves so that the liquid is either batch treated or treated as a continuous flow passing through the cell.

[0012] The size of the inlet, outlet and reservoir 18 is chosen so as to allow a sufficient residence time to destroy the bacteria and enzymes.

[0013] Direct current is utilized providing between .01 amps and .5 amps per square inch through the juice.

[0014] A test using fresh squeezed orange juice was conducted using an electrolytic cell with 2 titanium electrodes with a ruthenium coating spaced ¼" apart. The electrodes were 4 inches wide and 6 inches long. The total volume of the cell was approximately one quart. The test protocol was to test different batches of juice utilizing different current densities and varied residence times. The purpose of the test is to do a visual examination of the samples at 90 day intervals looking for color changes, signs of bacteria growth or a difference in the volume of pulp settling on the bottom of the sample container. Since color is one of the primary indicators that the orange juice has lost its freshness and therefore not marketable, color changes were the primary indicator for freshness for this testing. The current densities and residence times for the samples are listed below along with the observed color changes at 90 day intervals. Current density is defined as amperage per square inch of the electrode area.

		DAYS	
		90	**180**
Sample 1: current density - .01	Residence time: 10 seconds *	Good	Poor
Sample 2: current density - .03	Residence time: 10 seconds *	Good	Good
Sample 3: current density - .05	Residence time: 10 seconds *	Poor	Poor
Sample 4: current density - .07	Residence time: 10 seconds *	Poor	Poor
Sample 5: current density - .01	Residence time: 30 seconds *	Good	Poor
Sample 6: current density - .04	Residence time: 30 seconds *	Good	Good
Sample 7: current density -	Residence time: 30 seconds *	Poor	Poor

.06			
Sample 8: current density - .08	Residence time: 30 seconds *	Poor	Poor

[0015] Definition good: Shows no significant color change, no bacterial growth, pulp maintains volume.

[0016] Definition poor: Shows visible color change, usually darker color. May or may not show some bacterial growth and usually shows a change in volume of pulp settling on bottom of sample container.

[0017] Test results proved that using the correct current density and the correct residence time can result in the juice maintaining color and pulp density.

[0018] Although the present invention has been described with respect to specific details, it is not intended that such details should be regarded as limitations on the scope of the invention, except to the extent that they are included in the accompanying claims.

CLAIM(S)

I claim:

1. A method of prolonging the shelf life of a comestible liquid comprising:

providing an electrolytic cell having a pair of electrodes, an inlet for the liquid, an outlet for the liquid and a power source;

introducing the liquid to be treated into cell via the inlet;

energizing the pair of electrodes so as to cause current to pass from a first electrode to a second electrode; and

removing the liquid to be treated from the cell via the outlet.

2. The method of claim 1 wherein the electrolytic cell includes a plurality of pairs of electrodes.

3. The method of claim 1 wherein the comestible liquid is continuously introduced to and withdrawn from the electrolytic cell.

4. The method of claim 1 wherein the comestible liquid is held in the electrolytic cell for a given period of time and then removed.

5. The method of claim 1 wherein the liquid to be treated is orange juice, grape and other fruit juices.

6. The method of claim 1 wherein the electrodes are a titanium plate with a ruthenium coating or other similar noble coatings.

7. The method of claim 1 wherein a direct current power source is utilized to energize the electrodes which provides a current density between .01 amps and .5 amps per square inch depending on the type of juice treated.

8. The method of claim 1 wherein the comestible liquid resides in the electrolytic cell for 5 to 60 seconds.

FIG. 1

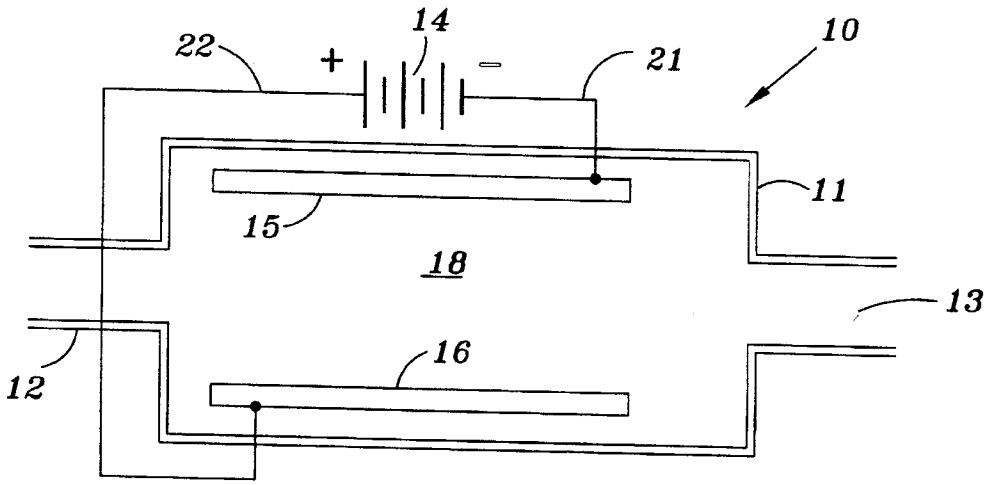

INTERNATIONAL SEARCH REPORT

International application No.
PCT/US14/31986

A. CLASSIFICATION OF SUBJECT MATTER
IPC(8) - A23L 3/32; C25B 11/08, 11/10 (2014.01)
USPC - 204/275.1, 290.12, 290.14
According to International Patent Classification (IPC) or to both national classification and IPC

B. FIELDS SEARCHED

Minimum documentation searched (classification system followed by classification symbols)
IPC(8): A23C 3/00, 3/027; A23L 2/42, 2/50, 3/00; 3/32; C25B 9/04, 11/08, 11/10 (2014.01)
USPC: 204/275.1, 290.12, 290.14; 422/22; 426/244, 599

Documentation searched other than minimum documentation to the extent that such documents are included in the fields searched

Electronic data base consulted during the international search (name of data base and, where practicable, search terms used)
MicroPatent (US-G, US-A, EP-A, EP-B, WO, JP-bib, DE-C,B, DE-A, DE-T, DE-U, GB-A, FR-A); Google Scholar; Google; ProQuest; passing, permitting, allowing, enabling, facilitating, introducing, comestible, drinkable, palatable, consumable, liquids, solvent, fluid, drink, grape juice, orange juice, electrolytic cell, electrical current, direct current, power source, energizing, prolonging, shelf life, titanium, noble

C. DOCUMENTS CONSIDERED TO BE RELEVANT

Category*	Citation of document, with indication, where appropriate, of the relevant passages	Relevant to claim No.
X	US 4,374,714 A (HEKAL, IM) 22 February 1983; abstract; column 2, lines 3-60; column 3, lines 7-47; column 4, lines 2-5; column 5, lines 15-47; column 9, lines 36-37; claims 1-3, 7-9	1, 3-8
X	US 4,695,472 A (DUNN, JE et al.) 22 September 1987; abstract; column 2, lines 62-65; column 4, lines 8-11; column 5, lines 11-12; column 6, lines 17-27; column 7, lines 6-8; column 8, lines 25-68; column 9, lines 1-17; column 13, lines 8-58; column 14, lines 15-67; claims 1, 3-4	1-2
A	US 6,534,107 B1 (MA, SX et al.) 18 March 2003; entire document	1-8
A	US 4,534,991 A (KRYGER, AC) 13 August 1985; entire document	1-8
A	US 6,020,018 A (TONG, CBS et al.) 01 February 2000; entire document	1-8
A	US 4,116,802 A (SMITH, F) 26 September 1978; entire document	1-8
A	US 5,048,404 A (BUSHNELL, AH et al.) 17 September 1991; entire document	1-8
A	US 5,393,541 A (BUSHNELL, AH et al.) 28 February 1995; entire document	1-8

☐ Further documents are listed in the continuation of Box C. ☐

* Special categories of cited documents:
"A" document defining the general state of the art which is not considered to be of particular relevance
"E" earlier application or patent but published on or after the international filing date
"L" document which may throw doubts on priority claim(s) or which is cited to establish the publication date of another citation or other special reason (as specified)
"O" document referring to an oral disclosure, use, exhibition or other means
"P" document published prior to the international filing date but later than the priority date claimed
"T" later document published after the international filing date or priority date and not in conflict with the application but cited to understand the principle or theory underlying the invention
"X" document of particular relevance; the claimed invention cannot be considered novel or cannot be considered to involve an inventive step when the document is taken alone
"Y" document of particular relevance; the claimed invention cannot be considered to involve an inventive step when the document is combined with one or more other such documents, such combination being obvious to a person skilled in the art
"&" document member of the same patent family

Date of the actual completion of the international search
16 July 2014 (16.07.2014)

Date of mailing of the international search report
05 AUG 2014

Name and mailing address of the ISA/US
Mail Stop PCT, Attn: ISA/US, Commissioner for Patents
P.O. Box 1450, Alexandria, Virginia 22313-1450
Facsimile No. 571-273-3201

Authorized officer:
Shane Thomas
PCT Helpdesk: 571-272-4300
PCT OSP: 571-272-7774