March 31, 1970 M. I. PORT ET AL 3,503,106

CONTINUOUS TECHNIQUES FOR MAKING FLAT WOVEN SYNTHETIC FABRICS

Filed June 27, 1968

Fig. 1.

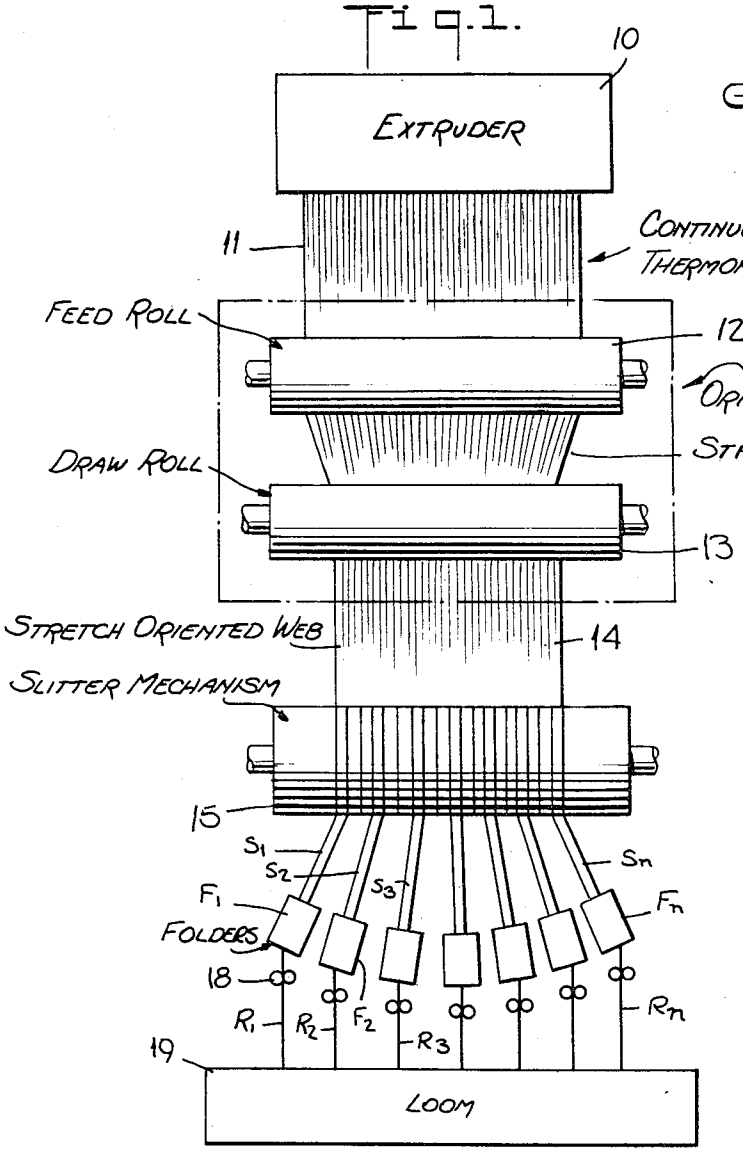

Fig. 4.

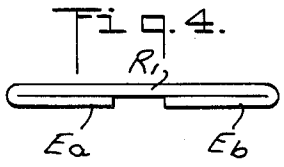

Fig. 2.

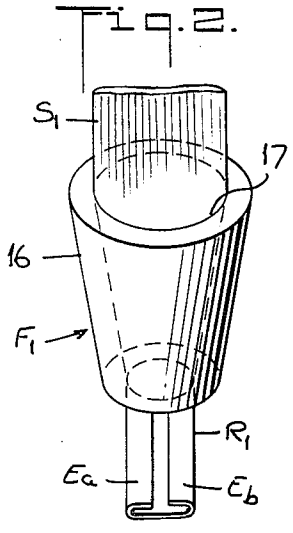

Fig. 3.

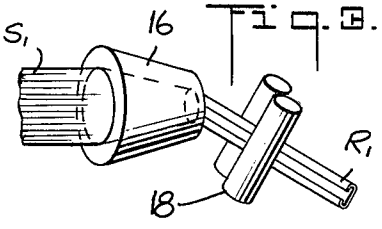

Fig. 5.

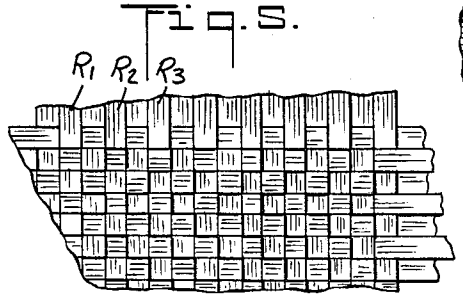

INVENTORS
MORTON I. PORT
BY BERNARD L. SCHWARTZ
ATTORNEY

United States Patent Office 3,503,106
Patented Mar. 31, 1970

3,503,106

CONTINUOUS TECHNIQUES FOR MAKING FLAT WOVEN SYNTHETIC FABRICS

Morton I. Port, West End, N.J., and Bernard L. Schwartz, Scarsdale, N.Y., assignors to Patchogue Plymouth Company, a division of Avisun Corporation, New York, N.Y., a corporation of Delaware

Continuation-in-part of application Ser. No. 378,179, June 26, 1964. This application June 27, 1968, Ser. No. 740,627
Int. Cl. D03d *15/00;* B29h *7/18*
U.S. Cl. 28—72 3 Claims

ABSTRACT OF THE DISCLOSURE

A continuous technique for manufacturing flat woven fabrics wherein thermoplastic material is extruded into a web which is stretch-oriented to increase its tensile strength, the web being slit before or after orientation to produce individual strips that are folded into narrow ribbons in which the cut edges of the strips are concealed, the ribbons being directly supplied into a loom where they are woven into a flat fabric.

RELATED APPLICATION

This application is a continuation-in-part of our application Ser. No. 378,179, filed June 26, 1964, now Patent 3,398,220.

This invention relates generally to a technique for making a flat fabric, and more particularly to a continuous process wherein a web of synthetic material is converted into ribbon-like yarns which are supplied directly into a weaving loom to produce a flat fabric.

Many uses exist for flat fabrics formed by interwoven ribbons of synthetic plastic material, such as polypropylene. Such woven flat fabrics serve, for example, as primary backings for tufted rugs in which pile yarns are needled into the backing. These sheet-like fabrics are also widely used for plastic bags and bales. When laminated to a thin film, a reinforced light-weight material is produced having exceptionally high tensile and tear strength, this material being useful for tarpaulins and for many other purposes.

The conventional technique for producing ribbon-like, synthetic yarns to be woven into a flat fabric involves extruding the synthetic material into a web which is oriented and slit into individual ribbons. These ribbons are then wound on a beam for use as warp yarns or onto suitable packages for use as filling yarns. In weaving operations, the ribbon yarns are thereafter unwound from the beam and the packages. Hence existing techniques involve discontinuous winding and unwinding operations, as well as transfer operations which add materially to the over-all cost of production.

Another drawback to existing techniques is that in slitting an oriented web to produce ribbons of yarn size, the slitting action tends to roughen or fibrillate the edges of the ribbon, as a consequence of which the edges are not smooth but exhibit fine fibrils. In weaving, such fibrils tend to interfere with the proper functioning of the loom and may result in a break-down, particularly in high speed weaving operations.

Accordingly, it is the main object of this invention to provide a novel technique for continuously producing flat fabric by converting a web of synthetic material into strips which are folded into narrow ribbons, the ribbons being directly woven into a flat fabric.

A significant feature of the invention is that it eliminates such conventional operations as packaging and

beaming, thereby effecting significant production economies.

Another object of the invention is to provide a continuous technique of the above type in which the folding serves to conceal the cut edges of the strips, thereby facilitating proper weaving operations, the folding serving to improve the edge tear-strength and hence the tear values of the resultant fabric.

Also an object of the invention is to provide a low-cost, sheet-like woven fabric whose structural characteristics are superior to those heretofore produced at higher cost.

Briefly stated, these objects are attained in a technique wherein molten thermoplastic material, such as polypropylene, is continuously extruded into a film-like web which is stretch-oriented to increase its tensile strength, the web being slit before or after orientation to produce individual strips which are then folded with the cut edges thereof turned inwardly to provide relatively narrow ribbons having smooth folded edges, which ribbons are fed directly into a loom where they are interwoven to form a flat fabric. Thus the process in accordance with the invention transforms molten raw material into a woven fabric in a rapid, uninterrupted, sequential operation.

For a better undestanding of the invention, as well as other objects and further features thereof, reference is made to the following detailed description to be read in conjunction with the accompanying drawing, wherein:

FIG. 1 schematically shows a system for carrying out a continuous technique for producing a sheet-like woven fabric in accordance with the invention;

FIG. 2 is a perspective view of one of the folding units;

FIG. 3 is a side view of the folding unit and of the associated calender rolls.

FIG. 4 is a transverse section taken through a ribbon produced by folding a strip; and

FIG. 5 is a plan view of the sheet-like fabric produced by the weaving operation.

The raw material used to make fabric in accordance with the invention may be any known form of molecularly orientatable, thermoplastic polymeric material such as polyethylene, polypropylene, polyamide, polyester. Polymers are synthetic substances composed of large molecules that have been formed by the union of a group of single molecules with one another.

As shown in FIG. 1, the selected raw material is rendered molten and extruded through a suitable extruder assembly **10** to form a film-like web **11**. The manner in which the raw material is converted into web-form is entirely conventional, and any standard equipment may be used for this purpose.

Web **11** is pulled from extruder **10** by feed rolls **12**, the web being cooled before it reaches these rolls, so that it is below its softening point. Longitudinal orientation is then effected by the process of drawing to irreversibly stretch the web and thereby increase its tensile strength considerably. This is accomplished by cooled draw rolls **13**, the peripheral speed of which is greater than that of heated feed rolls **12**, the ratio between the two rolls being termed the "draw ratio."

The stretch-oriented web **14** emerging from draw rolls **13** is conveyed into a slitter mechanism **15** where it is divided by rotary blades or equivalent means into a multiplicity of individual flat strips S_1 to S_n. Alternatively, slitting may be effected prior to orientation. Because orientation imparts to the material a tendency to fibrillate at the edges when subjected to stresses, strips S_1 to S_n emerging from the slitter have somewhat rough edges containing fine fibrils.

Each strip is conveyed through a folding unit (F_1 to F_n) which, as shown separately in FIG. 2, may take the form of a conical sleeve **16** having a tapered bore **17**

therein with an oblong cross-section of progressively diminishing dimensions. Thus the edges E_a and E_b of strip S_1, entering the input side of the folding unit at which the bore has its largest dimension, engage the wall of the bore and are caused thereby to fold over as the bore dimensions become smaller, so that the strip emerges from the output side of the bore with the edges E_a and E_b folded over, as shown in FIG. 4.

The folded-over edges are pressed down by calender rolls **18**, as shown separately in FIG. 3, to form flat and relatively narrow ribbons R_1 and R_n, the creased edges of the ribbons being the folded-over edges of the strip. Hence the creased edges of the ribbon present a smooth surface. The width of the strip is such that when folded over as described above, the resultant ribbon constitutes a yarn of the desired denier.

Ribbons R_1 to R_n are then fed into a standard loom **19** for weaving man-made yarns, such a a Draper loom, the ribbons being interwoven to form a fabric having a flat surface, as shown in FIG. 5. In practice, where it is desired that the flat yarn have, say, a two-mil thickness, the strips are made in a one-mil thickness to produce folded-over ribbons or flat yarn of two-mil thickness.

It is also possible to carry out the process in accordance with the invention by commencing with a commercial roll of oriented or unoriented synthetic thermoplastic material. Where the roll is formed of oriented film, the web thereof, as it is unwound from the roll, is fed into the slitter, the resultant strips being first folded and then fed directly into the loom in the manner previously described. But should the web be of unoriented film, the orientation may be effected in the course of feeding the folded ribbons into the loom by means of stretch rolls. In either case, the strips are so folded as to present smooth edges to facilitate weaving.

While there has been described and shown preferred techniques in accordance with the invention, it will be appreciated that many changes and modifications may be made therein without, however, departing from the essential spirit of the invention as defined in the annexed claims.

What we claim is:

1. A continuous technique for producing a flat fabric, comprising the steps of:

(a) extruding raw material formed of an orientatable synthetic thermoplastic material selected from the class consisting of polypropylene and polyethylene into a film-like web,

(b) orienting the web to increase the tensile strength of the material to a point at which fibrils are formed at the edges of individual strips subsequently derived from the web by slitting,

(c) slitting the web into individual strips,

(d) folding each strip with its fibrillated edges folded in to produce relatively narrow ribbons and then calendering the ribbons to press in the folds thereof to produce yarn-like ribbons having smooth creased edges; and

(e) interweaving said yarn-like ribbons directly into a flat fabric.

2. A technique as set forth in claim **1**, wherein said slitting is effected before orientation.

3. A technique as set forth in claim **1**, wherein said slitting is effected after orientation.

References Cited

UNITED STATES PATENTS

2,960,725	11/1960	Lefevre.	
2,985,503	5/1961	Becker	264—147 X
3,110,905	11/1963	Rhodes	139—420 X
3,193,904	7/1965	Evans et al.	57—31 X
3,253,072	5/1966	Scragg et al.	264—147
3,327,468	6/1967	Page	57—140
3,336,645	8/1967	Mirsky	139—11 X
3,398,220	8/1968	Port et al.	264—147
3,439,865	4/1969	Port et al.	139—389 X

FOREIGN PATENTS

180,540	12/1954	Austria.
702,381	1/1965	Canada.
12,462	of 1913	Great Britain.
1,035,227	7/1966	Great Britain.
98,780	10/1961	Norway.

JAMES KEE CHI, Primary Examiner

U.S. Cl. X.R.

57—140; 139—11, 420; 264—103, 147