United States Patent

[11] **3,568,599**

[72] Inventor **David Dardick**
Palos Verdes Peninsula, Calif.

[21] Appl. No. **665,160**
[22] Filed **Sept. 1, 1967**
[45] Patented **Mar. 9, 1971**
[73] Assignee **TRW Inc.**
Redondo Beach, Calif.

[54] **AMMUNITION IMPROVEMENTS TO PERMIT FIRING OF A CONVENTIONAL CLOSED CHAMBER CARTRIDGE IN AN OPEN CHAMBER BREECH MECHANISM**
2 Claims, 11 Drawing Figs.

[52] **U.S. Cl.** **102/38,** 102/43
[51] **Int. Cl.** **F42b 9/00,** F42b 5/26
[50] **Field of Search** ..... 102/38, 43, 43 (P), 93, 94, 92.1, 92.2; 89/33 (MC), 1.706

[56] **References Cited**

UNITED STATES PATENTS

702,208	6/1902	Hayner	102/38
2,423,453	7/1947	Howe	102/38
2,987,965	6/1961	Musser	89/1.706
2,996,988	8/1961	Kunz	102/38
3,212,440	10/1965	Quinlan et al.	102/38
3,311,061	3/1967	Roehrdanz	102/93

FOREIGN PATENTS

471,995	11/1914	France	89/33(MC)

Primary Examiner—Robert F. Stahl
Attorneys—Daniel T. Anderson, Gerald Singer and Alfons Valukonis

ABSTRACT: Ammunition for open chamber guns having a yieldable noncombustible jacket of generally triangular round shape in transverse cross section containing a conventional closed chamber cartridge frictionally fitted within a central bore within the jacket in such a way as to permit the cartridge to be fired in an open chamber gun.

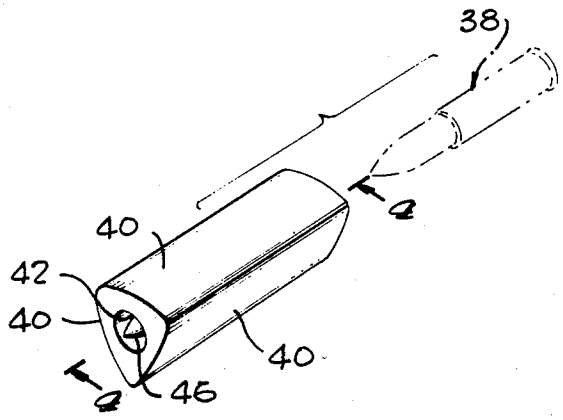

Fig. 1

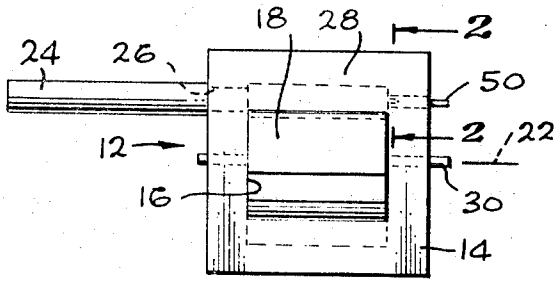

Fig. 2

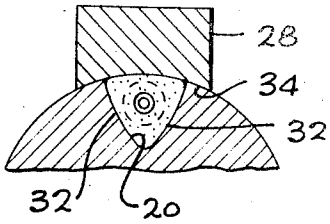

Fig. 3

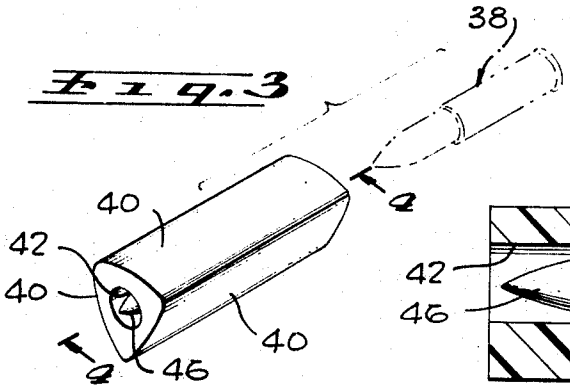

Fig. 4

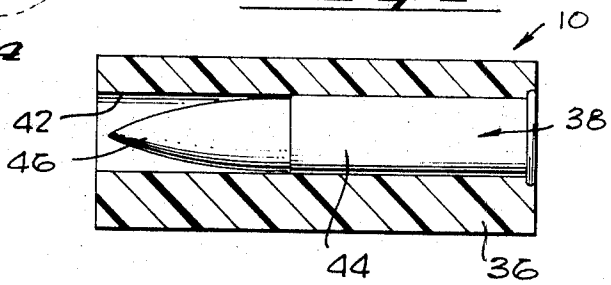

Fig. 5

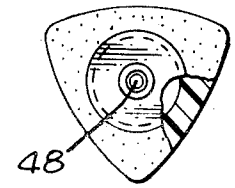

Fig. 7

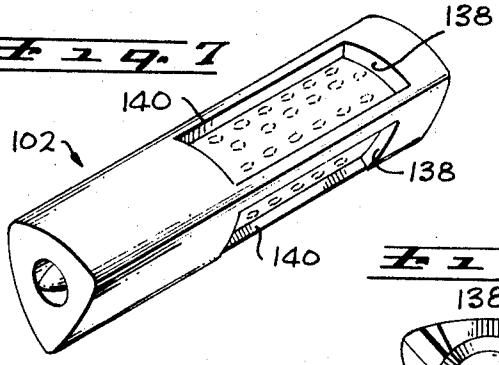

Fig. 9

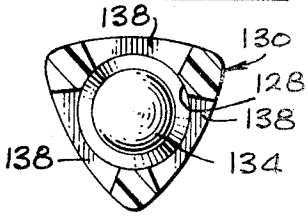

Fig. 8

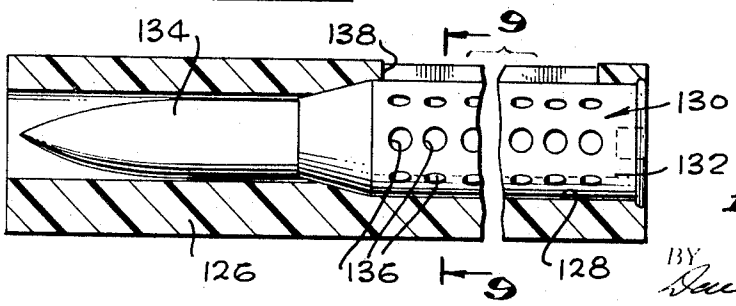

INVENTOR
DAVID DARDICK

BY Donald R. Nyhagen

ATTORNEY

Fig. 6

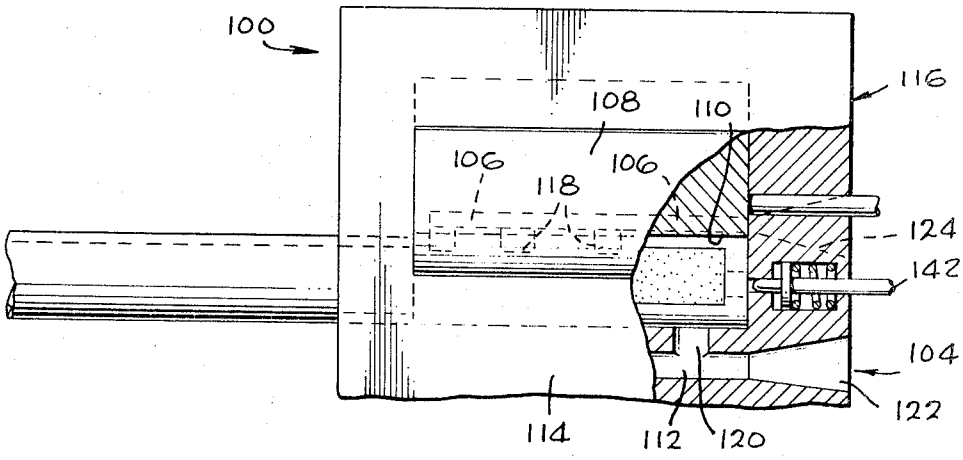

Fig. 10

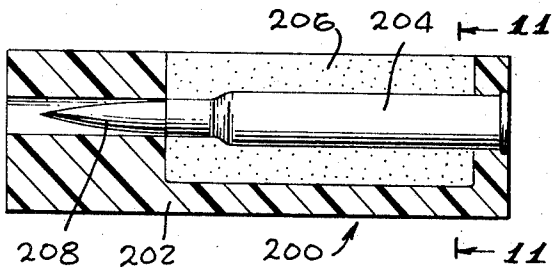

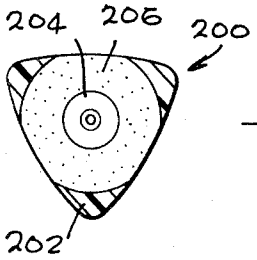

Fig. 11

DAVID DARDICK
INVENTOR.

BY Donald R. Nyboer

ATTORNEY

AMMUNITION IMPROVEMENTS TO PERMIT FIRING OF A CONVENTIONAL CLOSED CHAMBER CARTRIDGE IN AN OPEN CHAMBER BREECH MECHANISM

REFERENCE TO COPENDING APPLICATIONS

Reference is made herein to copending applications Ser. No. 671,910, filed Sept. 1, 1967, entitled, "Sealed Open Chamber Breech Mechanism and Caseless Ammunition Therefor," and Ser. No. 664,979, filed Sept. 1, 1967, entitled, "Recoilless Open Chamber Gun."

BACKGROUND OF THE INVENTION

1. Field of the Invention

This invention relates generally to ammunition for open chamber guns. More particularly, the invention relates to such ammunition embodying a conventional closed chamber cartridge and a yieldaBle noncombustible jacket of generally triangular cross section containing the cartridge in such manner as to permit the latter to be fired in an open chamber gun.

2. Prior Art

An automatic weapon equipped with a conventional closed chamber breech mechanism is characterized by a four-step firing cycle. This firing cycle involves initial lateral infeed movement of each round into the breech, axial insertion or ramming of the round into the firing chamber, axial extraction of the spent cartridge case from the chamber after firing, and finally lateral ejection of the spent case. This necessity of axially ramming each round into and axially extracting each spent cartridge case from the firing chamber of a closed chamber breech mechanism imposes a severe limitation on the firing rate as well as on the ammunition size which may be successfully fired in conventional automatic weapons.

Prior art U.S. Pat. Nos.: 2,983,223; 3,041,939; 2,831,140; 2,847,784; 3,046,890 disclose improved breech mechanisms, referred to as open chamber breech mechanisms, which avoid the above-noted and other disadvantages of conventional closed chamber breech mechanisms. Thus, an open chamber breech mechanism has a simplified two-step firing cycle which involves, merely, initial lateral infeed movement of each round to firing position and final lateral ejection of each spent cartridge case from firing position. The open chamber breech action, then, eliminates the necessity of axially ramming each round into and axially extracting each spent cartridge case from the firing chamber. An open chamber breech mechanism is thus uniquely adapted to high-rate automatic firing of ammunition of virtually any caliber.

Generally speaking, an open chamber breech mechanism is characterized by a breech frame having a chamber containing a rotary carrier or cylinder with one or more firing chambers which open laterally through the circumference of the cylinder and longitudinally through the front end of the cylinder. The cylinder is driven in rotation or oscillation in such manner as to sequentially locate each firing chamber in an ammunition infeed position, a firing position, and an ejection position. The open side of each firing chamber, when in infeed position, registers with an ammunition infeed opening in the breech frame to permit lateral infeed movement of an ammunition round into the chamber. When in firing position, the open side of each firing chamber is closed by the breech frame and the chamber opens forwardly to the gun bore to condition the breech mechanism for firing the round in the chamber. Rotation of each firing chamber to its ejection position aligns the open side of the chamber with an ejection opening in the breech frame to permit lateral ejection of the spent cartridge case from the chamber after firing.

Proper operation of an open chamber gun requires unrestricted lateral infeed movement of each round and lateral ejection of each spent cartridge case from the breech firing chamber or chambers, and sealing of the breech interfaces against propellant gas leakage during firing. Satisfaction of these two operating requirements lead to the development of unique firing chamber and ammunition configuration which characterizes open chamber guns. Thus, each firing chamber of an open chamber breech mechanism, when in firing position, is closed by the breech frame. More specifically, when a firing chamber occupies its firing position, the open side of the chamber is closed by the inner wall of the breech frame firing strap and the open front end of the chamber, about the gun bore, is closed by the front wall of the breech chamber. These walls and the confronting surfaces of the open chamber carrier or cylinder define therebetween leakage interfaces which must be sealed during firing to prevent propellant gas leakage therethrough. The aforementioned prior art patents and copending application Ser. No. 671,910, entitled, "Sealed Open Chamber Breech Mechanism and Caseless Ammunition Therefor," disclose two different techniques for effecting this breech-sealing function. The sealing technique disclosed in the copending application is employed when firing caseless ammunition. The sealing technique disclosed in the prior art patents, on the other hand, is employed when firing cased ammunition. The present invention utilizes the latter sealing technique. According to this technique, the breech interfaces are sealed during firing by the cartridge case of the fired round. To this end, each round is equipped with a yieldable, noncombustible cartridge case which is preferably constructed of plastic and contains the propellant charge and projectile of the round. During firing, the case is expanded by internal propellant gas pressure laterally and longitudinally against the walls of the firing chamber and breech frame in such a way that the case seals the breech interfaces against gas leakage.

Utilization of a cartridge case to effect breech interface sealing in this way presents certain problems which are well understood by those versed in the art and hence need not be explained in detail. Suffice to say that the problems referred to involve the task of shaping the firing chamber and ammunition cartridge case in such a way as to permit unrestricted lateral infeed movement of each round into and lateral ejection of the spent cartridge case from the chamber and yet provide adequate support for the cartridge case to prevent its rupture during firing. In the open chamber principle, these operating parameters are satisfied by providing each firing chamber and cartridge case with complementary, generally triangular round shapes in transverse cross section as described and illustrated in the patents referred to earlier. As noted in these patents, the preferred firing chamber and cartridge case cross section is a generally triangular round shape, wherein the cartridge case has three rounded sides which are cylindrically curved to the same radius as the circumference of the open chamber carrier or cylinder. The two tapered sides of each firing chamber and the inner wall of the breech frame firing strap are cylindrically curved to the same radius. As a consequence, when a round of ammunition is positioned within a firing chamber and the latter is rotated to firing position, the side of the ammunition cartridge case which is exposed at the open side of the chamber is flush with the circumference of the cylinder and is supported by the inner wall of the breech frame firing strap. The remaining two sides and ends of the cartridge case are supported by the two walls of the firing chamber and the end walls of the breech chamber, respectively. The cartridge case is thus firmly supported on all sides during firing in such a way that the case can expand without rupturing to seal the breech interfaces. Moreover, the triangular shapes of the firing chamber and cartridge case permit initial unrestricted lateral infeed movement of the round into the chamber and subsequent unrestricted lateral ejection of the spent case from the chamber.

The aforementioned prior art patents disclose various types of cased ammunition for open chamber breech mechanism. This ammunition, however, is particularly designed for use in open chamber guns.

SUMMARY OF THE INVENTION

The present invention provides ammunition improvements for open chamber guns which permit conventional ammuni-

tion to be fired in such gun. To this end, the invention provides ammunition including a conventional closed chamber cartridge encased within a plastic adapter sleeve or jacket. This jacket has the same external, generally triangular round configuration as the cartridge case of conventional open chamber ammunition and is sized to complement the firing chambers of the open chambers of the open chamber gun in which the ammunition is to be fired. During firing of a present ammunition round in an open chamber gun, the jacket is expanded by propellant gas pressure against the walls of the firing chamber and breech frame to seal the breech interfaces against propellant gas leakage in the same manner as the plastic cartridge case of conventional open chamber ammunition.

Another important aspect of the invention is concerned with composite ammunition of the general character described which is adapted to be fired in a recoilless open chamber gun of the kind disclosed in the aforementioned copending application Ser. No. 664,979, entitled, "Recoilless Open Chamber Gun." According to this aspect, the invention provides ammunition including an outer generally triangular plastic adapter sleeve or jacket containing a conventional recoilless round. The jacket has openings through which a portion of the propellant gas may flow to the rearwardly opening venturis in the gun to produce a counterrecoil force equal and opposite to the recoil force exerted on the gun during firing.

BRIEF DESCRIPTION OF THE DRAWINGS

FIG. 1 is a side elevation of a conventional open chamber gun in which the present ammunition is adapted to be fired;

FIG. 2 is an enlarged section taken on line 2–2 in FIG. 1 showing a present ammunition round in firing position in the gun;

FIG. 3 is a perspective view of a present ammunition round;

FIG. 4 is an enlarged section taken on line 4–4 in FIG. 3;

FIG. 5 is an enlarged rear end view, partly in section, of the ammunition round;

FIG. 6 is a side elevation, partly in section, of a recoilless open chamber gun of the type disclosed in the aforementioned copending application Ser. No. 664,979, entitled, "Recoilless Open Chamber Gun;"

FIG. 7 is an enlarged perspective view of a present recoilless ammunition round to be fired in the gun of FIG. 6;

FIG. 8 is a longitudinal section through the recoilless ammunition round;

FIG. 9 is a section taken on line 9–9 in FIG. 8;

FIG. 10 is a section through a modified round; and

FIG. 11 is a section on line 11–11 in FIG. 10.

Turning now to these drawings, and particularly to FIGS. 1—5 thereof, there is illustrated a composite ammunition round 10 according to the invention, which is adapted to be fired in a conventional open chamber gun, such as that illustrated at 12. Since the gun 12 is conventional and forms no part of the present invention, a detailed description of the same is unnecessary. Suffice it to say that the gun includes a generally flat rectangular breech frame 14 having a breech chamber 16 opening through opposite sides of the frame. Rotatably mounted in the breech chamber 16 is an open chamber carrier or cylinder 18 containing a firing chamber 20. Firing chamber 20 extends longitudinally of the cylinder and opens laterally through the circumference of the cylinder and longitudinally through the front end of the cylinder. Extending forwardly from the front end of the breech frame 14, in spaced parallel relation to the rotation axis 22 of the cylinder 18, is a barrel 24. Barrel 24 contains a bore 26 which opens at its rear end to the front end of the breech chamber 16 in confronting relation to the forward end of the cylinder 18. Breech cylinder 18 is rotatable in the breech chamber 16 to sequentially locate the firing chamber 20 in ammunition infeed, firing, and cartridge case ejection position. The firing chamber, when in infeed position, registers with an ammunition infeed opening in the breech frame 14 to permit lateral infeed movement into the chamber of a composite ammunition round 10 to be fired. In this instance, the infeed opening is furnished by one open side of the breech chamber 16. When the firing chamber 20 occupies its firing position, the open side of the chamber is closed by the inner wall of the breech frame firing strap 28 and the open front end of the chamber, about the gun bore 26, is closed by the front wall of the breech chamber 16. The firing chamber, when in ejection position, registers with a cartridge case ejection opening in the breech frame to permit lateral ejection of a spent cartridge case from the chamber. In this instance, the ejection opening, like the ammunition infeed opening, is furnished by one open side of the breech chamber 16. Extending coaxially from the rear end of the breech cylinder 18 and rotatable through the rear end of the breech frame 14 is a shaft 30 by which the cylinder may be rotated or oscillated between infeed, firing and ejection positions.

As noted earlier, a characteristic feature of open chamber breech mechanisms of the kind illustrated resides in the generally triangular round cross section of the cylinder firing chamber 20. In this regard, it will be observed that the firing chamber has two sidewalls 32 which are cylindrically curved to the same radius as the circumference of the cylinder 18 and converge in the direction of the cylinder axis 22 at an included angle of approximately 60°. The inner wall 34 of the breech frame firing strap 28 is also cylindrically curved to the same radius as is disposed in sliding contact with the circumference of the cylinder 18. Thus, the firing chamber 20, when in firing position, has a generally triangular round shape in transverse cross section and is bounded on two sides by the cylinder walls 32 and on its remaining side by the inner firing strap wall 34. In this firing position, the central axis of the firing chamber coincides with the central axis of the gun bore 26.

As noted earlier, the present invention is concerned primarily with the composite ammunition round 10. Referring to FIGS. 3—5, it will be observed that round 10 comprises an outer jacket 36 containing a conventional ammunition cartridge 38. Jacket 26 has the same generally triangular round shape in transverse cross section as the firing chamber 20 of the open chamber gun 12 and is sized to complement the chamber. Thus, the jacket has three substantially equal sides 40 which are cylindrically curved to the same radius as the circumference of the breech cylinder 18. Accordingly, when the round 10 is positioned in the firing chamber, two sides of the jacket seat flush against the two sidewalls 32 of the firing chamber and the third side of the jacket, which is exposed in the open side of the chamber, is substantially flush with the circumference of the cylinder. The three longitudinal apex edges of the jacket are rounded to a relative small radius so as to merge tangentially with the respective adjacent curved jacket sides 40. The length of the ammunition jacket 36 is substantially equal to the length of the cylinder firing chamber 20, whereby the front end face of the jacket is substantially flush with the front end face of the breech cylinder 18 and the rear end face of the jacket is substantially flush with the rear end face of the cylinder. The jacket may be constructed of any one of the yieldable, noncombustible materials or plastics disclosed in the aforementioned prior art patents. It will be recognized at this point, therefore, that the present ammunition jacket 36 has the same external configuration as the conventional open chamber ammunition disclosed in the prior art patents.

Extending axially through the jacket 36 is a bore 42 which receives the standard ammunition cartridge 38. Since the cartridge is conventional, it need not be explained in detail. Suffice to say, that the cartridge includes a cylindrical cartridge case 44 containing a propellant charge (not shown) and a projectile 46 which is fixed within and extends forwardly from the front end of the cartridge case. The rear end of the cartridge case contains a primer 48. The central bore 42 in the ammunition jacket 36 is dimensioned to receive the ammunition cartridge 38 with a friction fit, such that the cartridge and jacket are retained in assembled relation during handling and feeding. According to the present invention, the length of the

jacket 36 is substantially equal to or slightly greater than the overall length of the cartridge 38. Accordingly, the nose of the cartridge projectile 46 is situated adjacent the open front end of the jacket bore 42, and the cartridge primer 48 is situated adjacent and exposed through the open rear end of the bore.

The present composite ammunition round 10 is fired in the open chamber gun 12 in the same manner as a round of conventional open chamber ammunition. Thus, the breech cylinder 18 is initially rotated to locate its firing chamber 20 in infeed position, and the round is introduced laterally into the firing chamber. The cylinder is then rotated to locate the firing chamber in firing position, and the firing means 50 of the gun is actuated to fire the ammunition cartridge 38. The cartridge projectile 46 is thereby propelled forwardly from the ammunition jacket 36 through the gun bore 26 by the propellant gas generated by the burning propellant within the cartridge 38. The present ammunition jacket 36 radially supports the cartridge case 44 against rupture during firing. The jacket, in turn, is expanded by the propellant gas pressure laterally against the walls 32 of the firing chamber 20 and the wall 34 of the firing strap wall 28, and longitudinally against the front and rear walls of the breech chamber 16 to seal the breech interfaces against propellant gas leakage in the same way as the plastic cartridge case of conventional open chamber ammunition. After firing, the breech cylinder 18 is rotated to locate the firing chamber 20 in its ejection position for lateral ejection of the spent ammunition jacket 36 and metallic cartridge case 44 of the fired cartridge 38 from the firing chamber.

Reference is now made to FIGS. 6—9 which illustrate a recoilless open chamber gun 100 and a composite round 102 of recoilless ammunition according to the invention to be fired in the gun. The illustrated gun is of the type disclosed in the aforementioned copending application Ser. No. 664,979, entitled, "Recoilless Open Chamber Gun," and forms no part of the present invention. Accordingly, the gun will not be described in detail. Suffice to say that the gun 100 is identical to the open chamber gun 12 described earlier except for counterrecoil means 104 embodied in the gun 100. Counterrecoil means 104 comprises a pair of propellant gas plenums 106 extending longitudinally through the breech cylinder 108 at opposite sides of the firing chamber 110 and a third propellant gas plenum 112 which extends longitudinally through the firing strap 114 of the breech frame 116. The cylinder plenums 106 communicate laterally with the firing chamber 110 through a number of ports 118 which open through the firing chamber sidewalls. Extending through the inner wall of the firing strap 114 are a number of ports 120 which communicate the firing strap plenum 112 to the firing chamber 110 when the latter occupies its firing position. The rear end of the firing strap plenum 112 terminates in a venturi 122, opening through the rear end of the breech frame 116. Also, opening through the rear end of the breech frame area are a pair of venturis 124 which communicate with the rear ends of the cylinder plenums 106 when the firing chamber occupies its firing position. As in the earlier described open chamber gun 12, the breech cylinder 108 of the recoilless gun 100 is rotatable to locate the firing chamber in ammunition infeed, firing, and ejection positions.

The illustrated, composite recoilless ammunition round 102 is basically similar to the earlier described composite ammunition round 10 of the invention. Thus, the ammunition round 102 comprises an outer yieldable, noncombustible jacket 126 having a generally equilateral triangular round shape in transverse cross section which complements the breech cylinder firing chamber 110. Frictionally fitted within a central bore 128 in the jacket is a standard recoilless ammunition cartridge 130. Cartridge 130 has a cartridge case 132 containing a propellant charge (not shown) and a projectile 134 which is secured to and extends forwardly from the front end of the cartridge case. The cartridge case 132 is perforated to provide that case with a multiplicity of propellant gas ports 136. As is well known to those skilled in the art, a recoilless cartridge of the type illustrated contains a somewhat greater mass of propellant than a standard closed breech cartridge, and the cartridge case ports 136 are sized to vent from the cartridge case a portion of the propellant gas generated within the case during firing.

According to the present invention, the three sidewalls of the jacket 126 of the composite, recoilless ammunition round 102 are formed with openings 138 which uncover or expose a large number of the propellant gas vent ports 136 in the recoilless cartridge case 132. In this instance, the jacket openings 138 are rectangular in shape and define longitudinal ribs 140 along the three longitudinal apex edges of the jacket. When the round 102 is positioned in the cylinder firing chamber 110 of the open chamber gun 100, and the chamber is rotated to firing position, the jacket openings 138 communicate the cartridge case ports 136 and the plenum ports 106, 112 in the gun.

The ammunition round 102 is fired in the recoilless open chamber gun 100 in the same manner as described earlier in connection with the ammunition round 10 of the invention. Thus, the breech cylinder 108 is rotated to infeed position and the round 102 is inserted laterally into the cylinder firing chamber 110. The firing chamber is then rotated to firing position, and the recoilless cartridge 130 is fired by actuation of the breech mechanism firing means 142. A major portion of the propellent gas generated during firing propels the cartridge projectile 134 forwardly from the ammunition jacket 126 and through the gun bore. The remainder of the propellant gas flows through the cartridge case ports 136, the jacket sidewall openings 138, and the plenum ports 118, 120 in the gun 100 into the cylinder and firing strap plenums 106, 112. The propellant gas then flows rearwardly through these plenums and finally exits at high velocity through the rearwardly opening breech frame venturis 122, 124 to produce on the gun a counterrecoil force approximately equal and opposite to the recoil force exerted on the gun. As in the earlier embodiment of the invention, the ammunition jacket 126 is expanded by propellant gas pressure laterally against the sidewalls of the firing chamber 110 and the inner wall of the breech frame firing strap 114, and longitudinally against the front and rear walls of the breech chamber to seal the breech interfaces against propellant gas leakage. Obviously, the same jacket configuration may be employed to fire in an open chamber gun a conventional recoilless ammunition cartridge with a frangible rather than a perforated cartridge case.

Referring now to FIGS. 10 and 11, there is illustrated a composite open chamber ammunition round 200 according to the invention which may be fired in a conventional open chamber gun, such as that of FIGS. 1 and 2. Round 200 includes a yieldable, noncombustible jacket 202 similar to that utilized in the recoilless open chamber ammunition of FIGS. 7—9 an a conventional closed chamber, nonrecoilless ammunition cartridge 204. Depending upon the relative sizes of the jacket and cartridge, the latter may fit snugly within the jacket in somewhat the same fashion as does the conventional ammunition cartridge 38 in the composite open chamber round 10 of FIGS. 3—5, or with substantial clearance between the cartridge and jacket, as shown in FIGS. 10 and 11. In this regard, it is significant to note that it is immaterial whether or not the case of the cartridge 204 ruptures, or is frangible so that it fragments, when fired, since breech interface sealing is accomplished, not by the cartridge case, but by the adapter jacket 202. In either case, the main advantage of the illustrated open jacket configuration is that it minimizes the noncombustible mass of the jacket which must be disposed of after firing and the weight and cost of the jacket, and hence the ammunition round.

The open chamber ammunition of FIGS. 10 and 11 offers an additional unique and highly important advantage, particularly when the inner cartridge 204 is relatively small in diameter as compared to the transverse dimensions of the jacket 202, as shown, such that substantial clearance exists between the cartridge and jacket. This additional advantage resides in the fact that the space between the cartridge and jacket may

be filled with additional propellant **206** for increasing the velocity of the projectile **208** fired from the cartridge. In other words, the ammunition configuration of FIGS. **10** and **11** permits a relatively small caliber and low muzzle velocity cartridge to be fired with a substantially higher muzzle velocity in an open chamber gun. It will be understood, of course, that the additional or booster propellant **206** is ignited by the hot propellant gas generated within the cartridge **204** when the latter is fired. The booster propellant may be either a molded propellant or a loose grain propellant. When a loose grain booster propellant is used, the side openings in the open chamber adapter jacket **202** will be sealed by combustible covers or the like to prevent loss of the loose propellant grains through the openings. In either case, the side openings in the jacket not only minimize the noncombustible mass of the jacket but also maximize the booster propellant space.

While the invention has been disclosed in what is presently conceived to be its preferred and most practical embodiments, it will be understood that various modification of the invention are possible within the spirit and scope of the foregoing claims.

I claim:

1. Ammunition for a recoilless open chamber gun comprising:

a yieldable, noncombustible one-piece plastic jacket of generally triangular round shape in transverse cross section containing a bore extending through said jacket on the central longitudinal axis thereof and opening through the front and rear ends of said jacket;

a totally self-contained recoilless ammunition cartridge within said bore including a cylindrical perforate metallic cartridge case, a projectile secured to and extending forwardly from the front end of said cartridge case, a propellant charge totally contained within said cartridge case, and a primer at the rear end of said cartridge case;

said jacket having an overall length at least equal to the overall length of said cartridge and the rear end of said cartridge being substantially flush with the rear end of said jacket, whereby said jacket contains the full length of said cartridge to permit lateral infeed movement of said ammunition into a firing chamber of an open chamber gun;

said bore having a diameter in any given cross-sectional plane which is at least equal to the diameter of said cartridge in said given plane and in every cross-sectional plane forwardly of said given plane, and the front end portion of said bore containing said projectile and having a uniform diameter approximating the caliber of said projectile; and

the sidewalls of said jacket having openings located between the apices of said jacket and registering with the openings in said cartridge case for venting a portion of the high-pressure gas generated during firing of said cartridge.

2. Ammunition for an open chamber gun comprising:

a yieldable noncombustible one-piece plastic jacket of generally triangular round shape in transverse cross section containing a bore extending through said jacket on the central longitudinal axis thereof and opening through the front and rear ends of said jacket;

a totally self-contained closed chamber ammunition cartridge within said bore including a generally cylindrical cartridge case, a projectile secure to and extending forwardly from said case, a propellant charge totally contained within said cartridge case, and a primer at the rear end of said cartridge case;

said jacket having an overall length at least equal to the overall length of said cartridge and the rear end of said cartridge being substantially flush with the rear end of said jacket, whereby said jacket contains the full length of said cartridge to permit lateral infeed movement of said ammunition into a firing chamber of an open chamber gun;

said bore having a diameter in any given cross-sectional plane which is at least equal to the diameter of said cartridge in said given plane and in every cross-sectional plane forwardly of said given plane, and the front end portion of said bore containing said projectile and having a uniform diameter approximating the caliber of said projectile;

there being a clearance about said cartridge case between the latter and said jacket, and a booster propellant filling said space;

said jacket having openings in its sides between the apices of said jacket; and

said booster propellant filling said openings, thereby to maximize the booster propellant mass.