June 10, 1941. F. B. ALLEN 2,245,549

METHOD OF QUENCHING FLUID COKED PETROLEUM RESIDUE AND APPARATUS FOR CARRYING OUT THE METHOD

Filed May 17, 1938 2 Sheets-Sheet 1

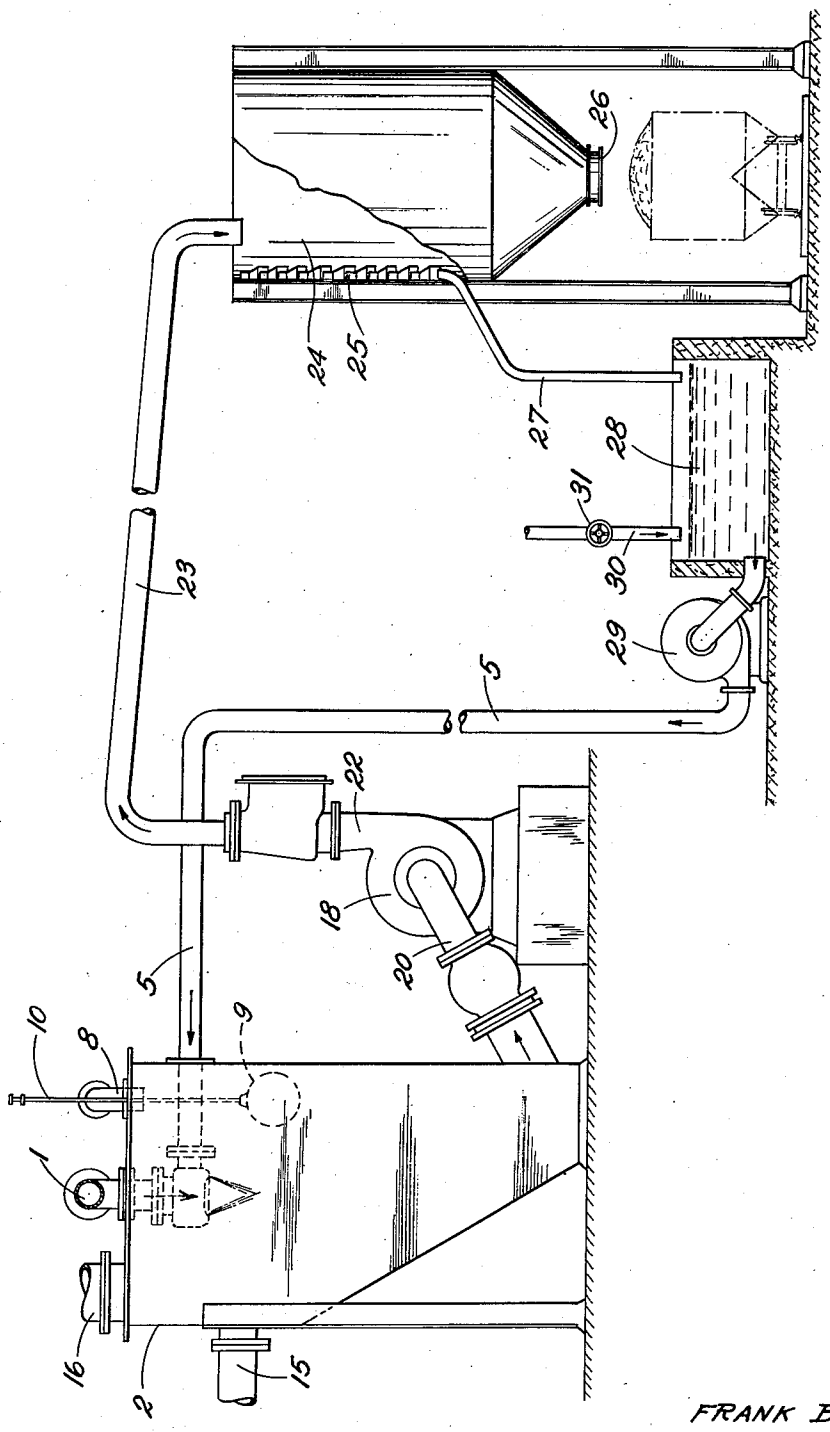

Fig. 1

INVENTOR.
FRANK B. ALLEN
Richey & Watts
ATTORNEYS

BY

June 10, 1941. F. B. ALLEN 2,245,549

METHOD OF QUENCHING FLUID COKED PETROLEUM RESIDUE AND APPARATUS FOR CARRYING OUT THE METHOD

Filed May 17, 1938 2 Sheets-Sheet 2

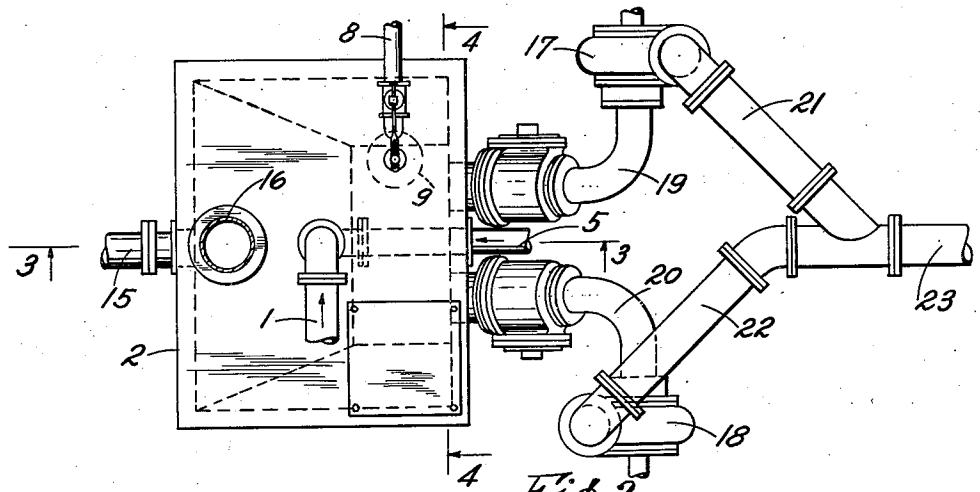

Fig. 2

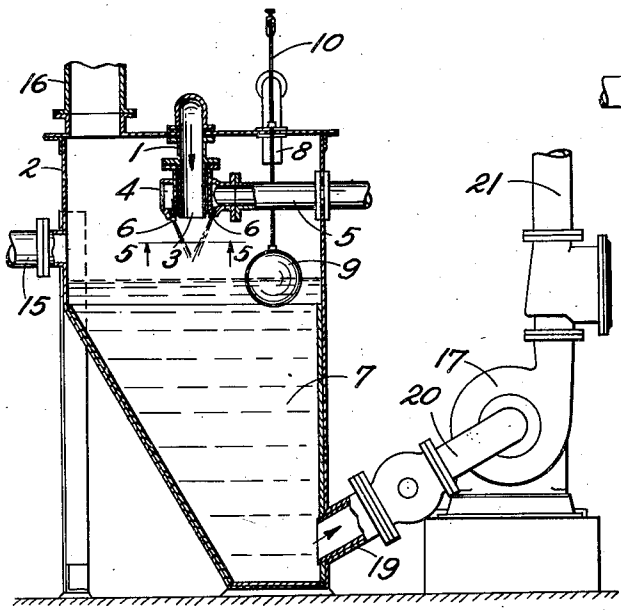

Fig. 3

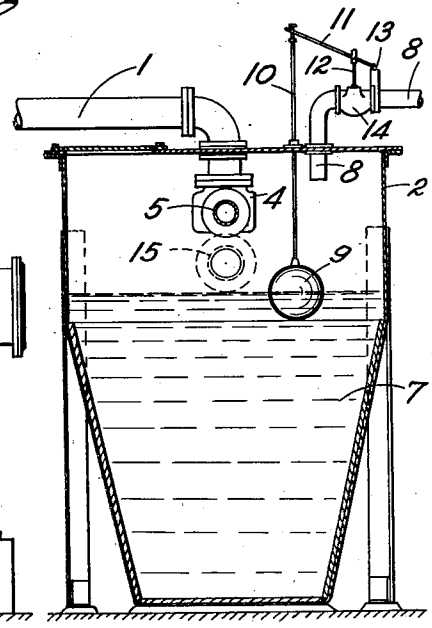

Fig. 4

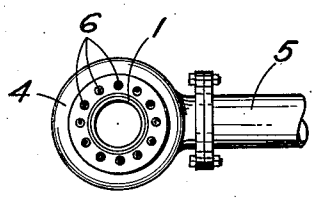

Fig. 5

INVENTOR.
FRANK B. ALLEN

BY Richey & Watts
ATTORNEYS

Patented June 10, 1941 2,245,549

UNITED STATES PATENT OFFICE

2,245,549

METHOD OF QUENCHING FLUID COKED PETROLEUM RESIDUE AND APPARATUS FOR CARRYING OUT THE METHOD

Frank B. Allen, Lower Merion Township, Montgomery County, Pa., assignor to The Allen-Sherman-Hoff Company, Philadelphia, Pa., a corporation of Pennsylvania

Application May 17, 1938, Serial No. 208,405

9 Claims. (Cl. 202—37)

This invention relates to an improved material disintegrating and handling method and apparatus therefor, and more particularly to an improved method and apparatus for disintegrating, cooling and congealing hot liquid materials, such as petroleum coke or the like, and conveying the disintegrated and congealed material to a place of storage or disposal.

Petroleum coke is a product of the refining of petroleum oils and may be withdrawn from the refining stills in liquid form at approximately 750° F. In order conveniently to handle this material it is necessary to cool, congeal and break it up into relatively small particles. It is among the objects of the present invention to provide an improved method of and a continuously operating apparatus for disintegrating hot liquid petroleum coke or the like and at the same time cooling and congealing it in small particles. A further object of the invention is the provision of apparatus for cooling, disintegrating and congealing liquid petroleum coke or the like and removing the congealed particles to a place of disposal which apparatus is substantially automatic in operation and very economical of cooling water.

The above and other objects of my invention will appear from the following description of my preferred procedure and of apparatus adapted to carry out the steps of my process, reference being had to the accompanying drawings, in which—

Figure 1 is a diagrammatic side elevational view of my improved disintegrator together with means for conveying the broken up material to a separating tank or hopper and returning the water used in the conveying conduit to the disintegrating jets.

Figure 2 is a plan view of the cooling and disintegrating unit shown in Figure 1.

Figure 3 is a vertical cross-sectional view taken substantially on line 3—3 of Figure 2.

Figure 4 is a vertical cross-sectional view taken substantially on line 4—4 of Figure 2.

Figure 5 is a fragmentary view taken on line 5—5 of Figure 3 illustrating the arrangement of disintegrating jets.

Referring now to the drawings, the hot liquid coke, or other material which is to be disintegrated and cooled such as slag for example, is conveyed from any suitable source through the pipe 1 to the tank 2 of the cooling and disintegrating unit. As is best seen in Figure 3, the pipe 1 discharges the hot fluid in a solid stream downwardly into the tank 2. Surrounding the outlet 3 of the pipe 1 is an annular chamber 4 which is connected to the water jet supply pipe 5. A plurality of nozzles 6 (see Figs. 3 and 5) are disposed around the outlet 3 of the pipe 1 and are adapted to direct jets of water under high pressure in inwardly converging streams into the mass of hot fluid material being discharged from the pipe 1. These high pressure jets from the nozzles 6 break up the discharged liquid coke into small particles and at the same time cool it so that it is at least partially congealed.

The bottom portion of the tank 2 is preferably made in the form of a hopper as indicated at 7. This is maintained full of water by means of an automatic float valve which controls the supply of make-up water which enters the tank through the pipe 8. The automatic float valve may be of any suitable form and is diagrammatically illustrated as including a float 9 secured at the lower end of an operating rod 10 which is connected at its upper end to a link 11. The valve stem 12 is connected to the link 11 which has one end pivotally supported at 13. The valve which shuts off the supply of make-up water is shown at 14.

In operation, when the level of the water in the tank 2 falls the float 9 will drop and the resulting downward movement of the lever 11 will open the valve 14 permitting water to be discharged into the tank through the pipe 8. As the level rises the float 9 lifts and, when the predetermined proper level is reached, the valve 14 will be closed. An emergency or safety overflow pipe 15 is provided which extends out of the tank 2 preferably somewhat above the normal water level therein and a vapor outlet pipe 16 is adapted to carry away steam and gases created by the contact of the hot liquid with the water disintegrating and cooling jets.

The jets of water from the nozzles 6 will drip the congealed coke particles into the body of water in the hopper portion 7 of the tank 2 where the particles will be further cooled and congealed if they have not already been completely congealed by the action of the water jets. A pair of pumps 17 and 18, driven by any suitable means, not shown, are adapted to withdraw the mixture of water and particles of coke from the bottom of the hopper 7 through the pipes 19 and 20. The pumps 17 and 18 discharge through outlet pipes 21 and 22 into a common mixture conveying conduit 23 which, as seen in Figure 1, carries the mixture to the collecting and separating tank 24. This tank 24 may be of any suit-

able type and, as illustrated, has a plurality of louvres 25 along one side which permit water to drain out of the tank but prevent the outflow of solid material. A bottom discharge opening 26 permits the periodical removal of accumulated solids from the tank. The water which is separated from the solids in the tank 24 passes out through a pipe 27 into a sump 28. From this sump 28 a pump 29 forces the water through the pipe 5 into the annular chamber 4 around the pipe 1 and through the nozzles 6 forming jets which impinge upon and disintegrate and cool the hot fluid coke as it is discharged from the outlet 3 of the pipe 1. A make-up water supply pipe 30, controlled by a valve 31, may be provided to add water to the sump 28 when necessary. The supply of make-up water brought to the tank 2 through the pipe 8 and the float controlled valve 14 may come from any suitable source (not shown).

From the above description of a preferred arrangement of my improved apparatus for disintegrating and handling fluid material such as hot liquid coke or the like, it will be seen that the consumption of water used in disintegrating, cooling and conveying is reduced to a minimum. The water which is forced through the nozzles 6 serves to disintegrate and at least partially cool the material being handled as it is discharged from the pipe 1. This same water serves to assist in maintaining the water level in the hopper portion 7 of the tank 2 and thus maintain the proper pool or body of water into which the disintegrated material falls and by which it is completely cooled and congealed. This same water also serves as a conveying agent for carrying the congealed material to a place of disposal such as the tank 24 and is then separated from the solids and returned to the system through the nozzles 6. Of course, it will be necessary to add make-up water to the system due to unavoidable losses from the separating tank, etc. If desired the mixture of solids and water conveyed by the pipe 23 may be discharged upon a pile and the drained off water collected and returned to the system in a manner similar to that illustrated and described in my co-pending U. S. patent application, Serial No. 199,371, filed April 1, 1938. By arranging the nozzles 6 so that their streams all converge into the hot fluid being discharged from the pipe 1 a thorough disintegrating and cooling action is obtained and my system, in addition to being exceedingly economical of water, most effectively breaks up and solidifies the liquid coke or the like and then deposits the particles in a relatively large body of water from which the mixture of water and congealed material may readily be removed by suitable pumps.

Where the term "solid" is used in describing the stream of fluid which is discharged from the outlet 3 of the pipe 1 it is intended to be descriptive of the state of the fluid stream when discharged from a single outlet opening and to distinguish from fluid discharged in a spray or mist.

Although I have described the illustrated embodiment of my apparatus in considerable detail and described my method as applied to handling liquid petroleum coke, it will be understood that variations and modifications may be made in the apparatus employed and in the procedure used in carrying out my method and that my invention may be applied to other materials. I do not, therefore, wish to be limited to the specific form of my invention herein described but claim as my invention all embodiments coming within the scope of the appended claims.

I claim:

1. The method of handling hot fluid viscous petroleum coke or like material which includes the steps of flowing said material through a conduit, discharging the hot fluid material from said conduit in a solid stream, discharging a plurality of disintegrating jets of water under pressure downwardly and radially inwardly into said solid stream material at a plurality of points spaced around and adjacent the point of discharge of said solid stream of material from the conduit, breaking and tearing said hot fluid material into small particles by said jets of water, and collecting the disintegrated material in a body of water disposed below the disintegrating jets of water.

2. The method of handling hot fluid viscous petroleum coke or like material which includes the steps of flowing said material through a conduit, discharging the hot fluid material from said conduit in a solid stream, discharging a plurality of disintegrating jets of water under pressure into said solid stream of hot fluid material adjacent the point of discharge of said material from the conduit, breaking and tearing said hot fluid into small particles by said jets of water, collecting the water from the jets and the disintegrated material in a body of water disposed below the disintegrating jets of water, withdrawing the mixture of disintegrated material and water, separating the water from the solids therein, and returning the separated water to the system in the disintegrating jets.

3. The method of handling hot fluid viscous petroleum coke or like material which includes the steps of flowing said material through a conduit, discharging the hot fluid material from the conduit in a solid stream, discharging a plurality of disintegrating jets of water under pressure into said solid stream of hot fluid material adjacent the point of discharge of said material from the conduit, breaking and tearing said hot fluid into small particles by said jets of water, collecting the water from the jets and the disintegrated material in a body of water disposed below the disintegrating jets of water, withdrawing the mixture of disintegrated material and water, separating the water from the solids therein, returning the separated water to the system in the disintegrating jets, and maintaining a predetermined water level in said body of water.

4. The method of handling hot viscous liquid petroleum coke which includes the steps of flowing said liquid coke through a pipe, discharging the hot fluid material from the pipe in a solid stream, discharging a disintegrating stream of water under pressure into the hot liquid as it is discharged in a solid stream from said conduit, breaking and tearing said hot liquid coke into small particles by said jets of water, permitting the water from said disintegrating stream and the broken up coke to drop into a body of water, maintaining the level of said body of water within predetermined high and low limits, and withdrawing disintegrated and congealed coke and water from said body.

5. In apparatus of the type described, a tank, a material conveying conduit having a single outlet above said tank, a plurality of nozzles disposed adjacent to and symmetrically around said single outlet, means for directing water under pressure into and through said nozzles, said nozzles being arranged to direct sharply converging streams or jets of water directly into a solid

stream of material discharged from said outlet, means for removing a mixture of solids and liquid from said tank, means for adding make-up water when required to maintain the level of water in said tank above a predetermined low limit, and an overflow outlet for regulating the upper limit of the level of water in said tank.

6. In apparatus of the type described, a tank, a pipe extending into said tank and having a single outlet adapted to discharge a solid stream of liquid thereinto, a nozzle disposed adjacent said outlet and positioned to direct a solid jet of water at a point adjacent said outlet into liquid discharged from said outlet, means for maintaining a body of water in said tank below said outlet, and means for withdrawing from said tank water and disintegrated and congealed material discharged into said tank through said pipe outlet.

7. In apparatus of the type described, a tank, a pipe extending into said tank and having a single outlet adapted to discharge a solid stream of liquid thereinto, a nozzle disposed adjacent said outlet and positioned to direct a solid jet of water at a point adjacent said outlet into liquid discharged from said outlet, means for maintaining a body of water in said tank below said outlet, and means for withdrawing from said tank water and disintegrated and congealed material discharged into said tank through said pipe outlet, said tank being provided with means for permitting the escape of vapors and gases therefrom.

8. In apparatus of the type described, a tank, a pipe extending into said tank and having a single outlet adapted to discharge a solid stream of liquid thereinto, a nozzle disposed adjacent said outlet and positioned to direct a solid jet of water directly into liquid discharged from said outlet at a point adjacent said outlet, means for maintaining a body of water in said tank below said outlet, means for withdrawing from said tank water and disintegrated and congealed material discharged into said tank through said pipe outlet, means for separating said withdrawn water from said withdrawn congealed material, and means, including a pump, for returning said separated water to said nozzle.

9. In apparatus of the type described, a tank, a pipe extending into said tank and having a single outlet adapted to discharge a solid stream of liquid thereinto, a nozzle disposed adjacent said outlet and positioned to direct a solid jet of water directly into liquid discharged from said outlet at a point adjacent said outlet, means for maintaining a body of water in said tank below said outlet, means for withdrawing from said tank water and disintegrated and congealed material discharged into said tank through said pipe outlet, means for separating said withdrawn water from said withdrawn congealed material, means, including a pump, for returning said separated water to said nozzle, and means for adding make-up water to said separated water.

FRANK B. ALLEN.