June 13, 1967

J. R. TUCKER, JR

3,325,774

TERMINAL BOARD DESIGN

Filed May 7, 1965

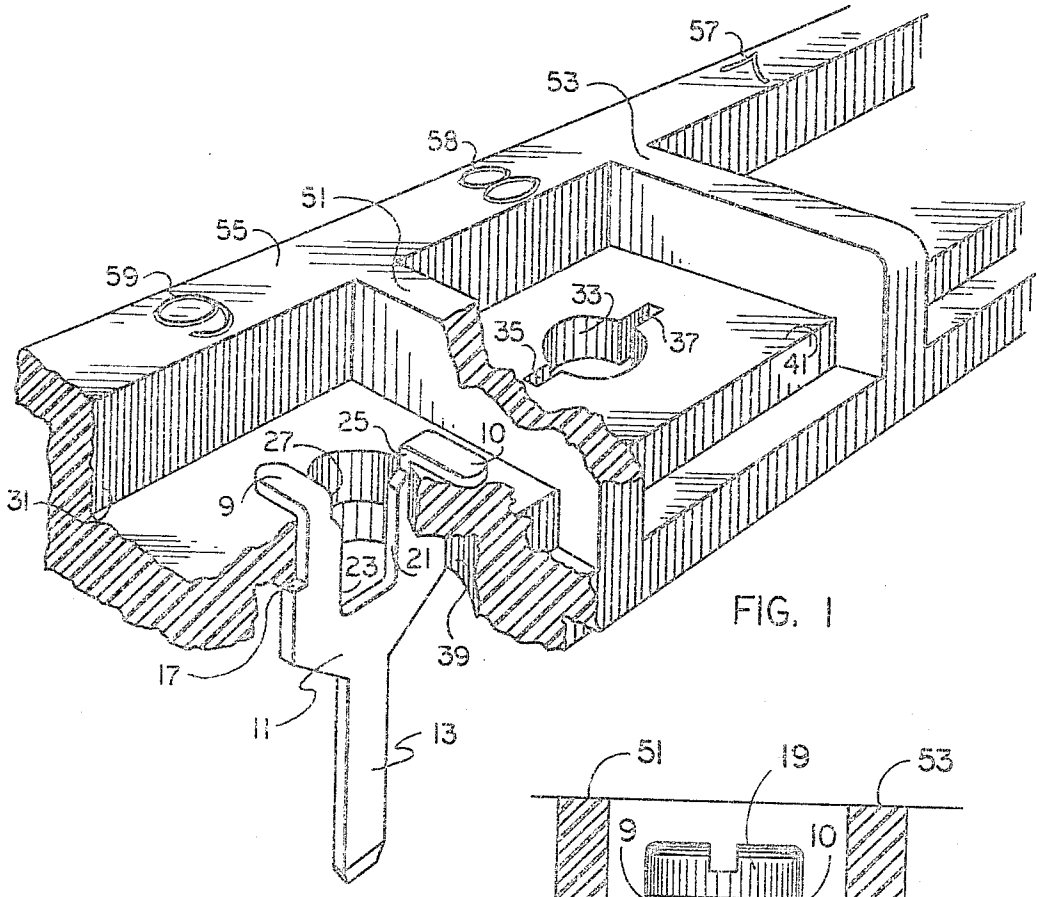

FIG. 1

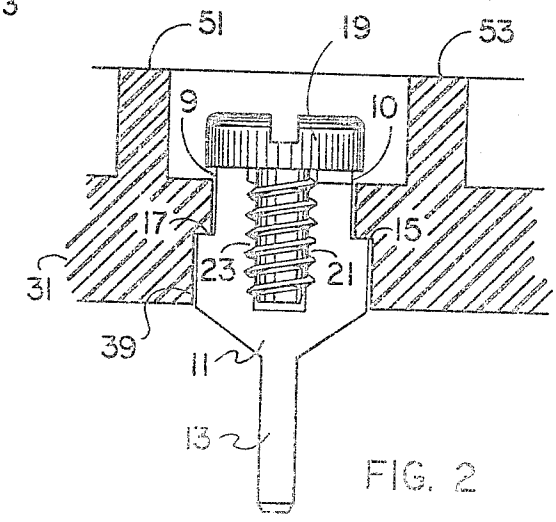

FIG. 2

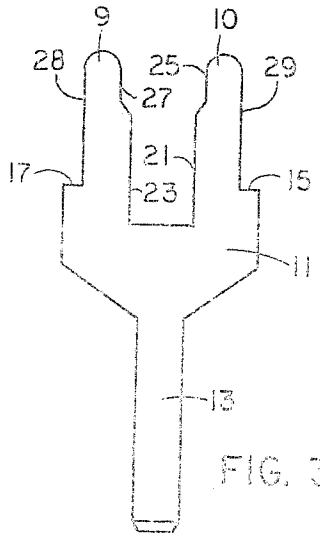

FIG. 3

INVENTOR.
JOHN R. TUCKER, JR.

BY

J. T. Comfort

United States Patent Office 3,325,774 Patented June 13, 1967

3,325,774

TERMINAL BOARD DESIGN

John R. Tucker, Jr., Roanoke, Va., assignor to General Electric Company, a corporation of New York

Filed May 7, 1965, Ser. No. 454,051
2 Claims. (Cl. 339—220)

ABSTRACT OF THE DISCLOSURE

The invention relates to means for securing a terminal to a board. Counterbored openings are provided in the board, diametrically opposed slots being provided in the smaller diameter portion of each opening. A U-shaped terminal having a wiring tail parallel to the fingers, shoulders on the outer edges of the fingers adjacent the bight portion and a stepped portion on the inner edges thereof spaced above said shoulders thereby reducing the width of said fingers, is disposed in each opening, the outer shoulders abutting the annular shoulder in the opening formed by the counterbore, the intermediate finger portions being disposed in the opposed slots and the free ends of the finger portions extending beyond the opening. A self-tapping screw is threaded into the inner edges of the fingers and the head thereof bends said free ends against the surface of the board surrounding the opening.

This invention is directed to an electrical connector and is specifically adapted for use on a terminal block.

A terminal block normally provides an interconnection between two terminating wires. One wire is normally permanently attached to the terminal block by welding, wire wrap, soldering, or the like. The other wire is semi-permanently attached to the terminal block by a screw. Such terminal blocks usually consist of a plurality of pieces which are relatively expensive and difficult to assemble. It is therefore an object of this invention to provide a terminal block to provide an interconnection between two terminating wires. The terminal block according to this invention was designed with the object of easy assembly. It was a specific object of this invention to provide a new and improved terminal block having a small number of relatively inexpensive pieces.

A terminal block constructed according to this invention has a piece of plastic material with a hole in the face of the plastic piece. A terminal piece having a shank and a plurality of separated fingers is inserted into the hole in the plastic piece so that the tips of the separated fingers of the terminal piece extend beyond the face of the plastic piece. A screw is adapted to screw into the hole in the plastic piece so that the head of the screw bends the tips of the separated fingers of the terminal piece toward the face of the plastic piece. The screw may then be backed off to connect a wire terminal between the screw and the tips of the terminal piece. Another wire terminal may be connected to the shank of the terminal piece.

The invention is set forth with particularity in the appended claims. The principles and characteristics of the invention, as well as other objects and advantages are revealed and discussed through the medium of the illustrative embodiments appearing in the specification and drawing which follow.

In the drawing:

FIGURE 1 shows a portion of the terminal board and the terminal support.

FIGURE 2 shows a cross-sectional view of the assembly of one of the terminal points.

FIGURE 3 is a side view of the terminal.

Terminal **11** shown in FIGURE 3 is made of 0.03 inch thick brass, electroplated with a thin layer of tin-nickel

plate to provide corrosion resistance. The terminal is Y-shaped with the tail portion **13** designed to accept the usual wire connections by such means as wire-wrap, crimping, sleeves, solder, and the like.

The body of the terminal **11** is generally U-shaped with two fingers **9** and **10**. The outside of each finger has a shoulder **15** and **17** so that the lower portion of the terminal body is wider than the upper portion. The inside of fingers **9** and **10** start at the top with an opening width equal to the major thread diameter of self-threading screw **19** in FIGURE 2 so that the screw passes freely between tips **25** and **27** of fingers **9** and **10**.

The inner portions **21** and **23** of fingers **9** and **10** narrows down to the minor thread diameter of terminal screw **19**. During assembly the screw cuts its thread into the inner portion **21** and **23** of the fingers **9** and **10**.

In FIGURE 1 there are a plurality of holes **33** in the insulating terminal support member **31**. Insulating terminal support **31** is of a plastic material. The number of holes **33** is determined by the desired number of terminal points. Each hole **33** has two radially oriented slots **35** and **37**.

The terminal board is recessed from the bottom by counter bore opening **39** with the center of opening **39** coinciding with the center of hole **33**. The diameter of the counter bore **39** is slightly larger than the greatest width of terminal **11**. The overall dimension of the two slots **35** and **37** across the center of hole **33** is equal to the width of terminal fingers **9** and **10**, so that during assembly sides **28** and **29** of terminal **11** make contact with the ends of the slots.

To assemble the terminal, terminal **11** is inserted from the bottom of terminal support **31**; fingers **9** and **10** are inserted into slots **35** and **37** so that the lower portion of terminal **11** enters into the counter bore **39**. Shoulders **15** and **17** of terminal **11** engage the upper side of counter bore **39**. At this point, fingers **9** and **10** protrude beyond the top of slots **35** and **37**.

The self-threading screw **19** is then inserted between fingers **9** and **10** to pass freely between sides **25** and **27**. The screw then engages the sides of hole **33** and the sides **21** and **23** of terminal **11**. The diameter of hole **33** is the same width as the distance between the sides **21** and **23** of terminal **11**.

Screw **19** cuts thread in both fingers **9** and **10** of terminal **11** and in hole **33** as it is screwed into hole **33**. The head of screw **19** engages the tips of fingers **9** and **10** as it is screwed into hole **33**. Slots **35** and **37** retain the lower portion of the fingers **9** and **10** in position to prevent them from spreading under the forcing action of screw **19**. Terminal **11** is pulled upward as screw **19** tightens, forcing the shoulders **15** and **17** against the upper surface of counter bore **39** and bending fingers **9** and **10** against the top-face **41** of terminal support **31** to lock terminal **11** permanently into place.

The screw **19** may be backed off to attach a terminal lug under the screw and then the screw may be tightened against the lug. The upper tips **9** and **10** of terminal **11** make the electrical connection with the lug or wire. Wires may be connected to the tail of terminal **11** by wire wrapping, soldering, welding, or other known means of connection.

Terminal support **31** has barriers **51** and **52** between adjacent terminals. A barrier **55** is located along the back of the terminal support to provide "flashover" protection between the terminals and the metal supporting the terminal board. Barrier **55** also provides space for numeral imprintings **57–59** to designate the terminal point number.

While the invention has been explained and described with the aid of particular embodiments thereof, it will

be understood that the invention is not limited thereby and that many modifications retaining and utilizing the spirit thereof without departing essentially therefrom will occur to those skilled in the art in applying the invention to specific operating environments and conditions. It is therefore contemplated by the appended claims to cover all such modifications as fall within the scope and spirit of the invention.

What is claimed is:

1. A terminal block comprising, a block of plastic material having a first hole in a first face of said block of a first predetermined diameter and a second hole in the opposing face of said block concentric with the first hole of a second predetermined diameter larger than the diameter of the first hole, a terminal piece having a shank and a plurality of separated fingers, said terminal piece having shoulders on said shank wider than the diameter of the first hole of said block, said terminal piece inserted through said second hole of said block so that the shoulders of said terminal abut the intersection of the first and second holes of said block and the tips of the separated fingers of said terminal piece extending beyond the first face of said block, and a screw having a head adapted to screw into the first hole of said block so that the head of said screw engages and bends the tips of the separated fingers of said terminal piece toward the first face of said block.

2. A terminal block comprising, a block of plastic material having a first hole with radial slots in a first face of said block of a first predetermined diameter and a second hole in the opposing face concentric with the first hole of a second predetermined diameter larger than the diameter of the first hole, a terminal piece having a shank and a plurality of separated fingers, said terminal piece having shoulders on said shank wider than the radial slots of the first hole, said terminal piece inserted through said second hole into the radial slots of said first hole so that the shoulders of said terminal abut the intersection of the radial slots and the second hole of said block and the tips of the separated fingers of said terminal piece extend beyond the first face of said block, and a screw having a head and an inner screw diameter equal to the first hole of said block adapted to screw into the first hole of said block so that the head of said screw bends the tips of the separated fingers of said terminal toward the first face of said block.

References Cited

UNITED STATES PATENTS

1,729,740	10/1929	Gaynor	339—214
2,440,876	5/1948	Rogers	339—214 X
2,933,007	4/1960	Healy	339—220 X
3,124,408	3/1964	Oestereicher	339—220

MARVIN A. CHAMPION, *Primary Examiner.*

PATRICK A. CLIFFORD, *Examiner.*