Mar. 6, 1923.

1,447,333

W. M. BACON

PRINTING MACHINE

Filed Oct. 10, 1921

4 sheets-sheet 1

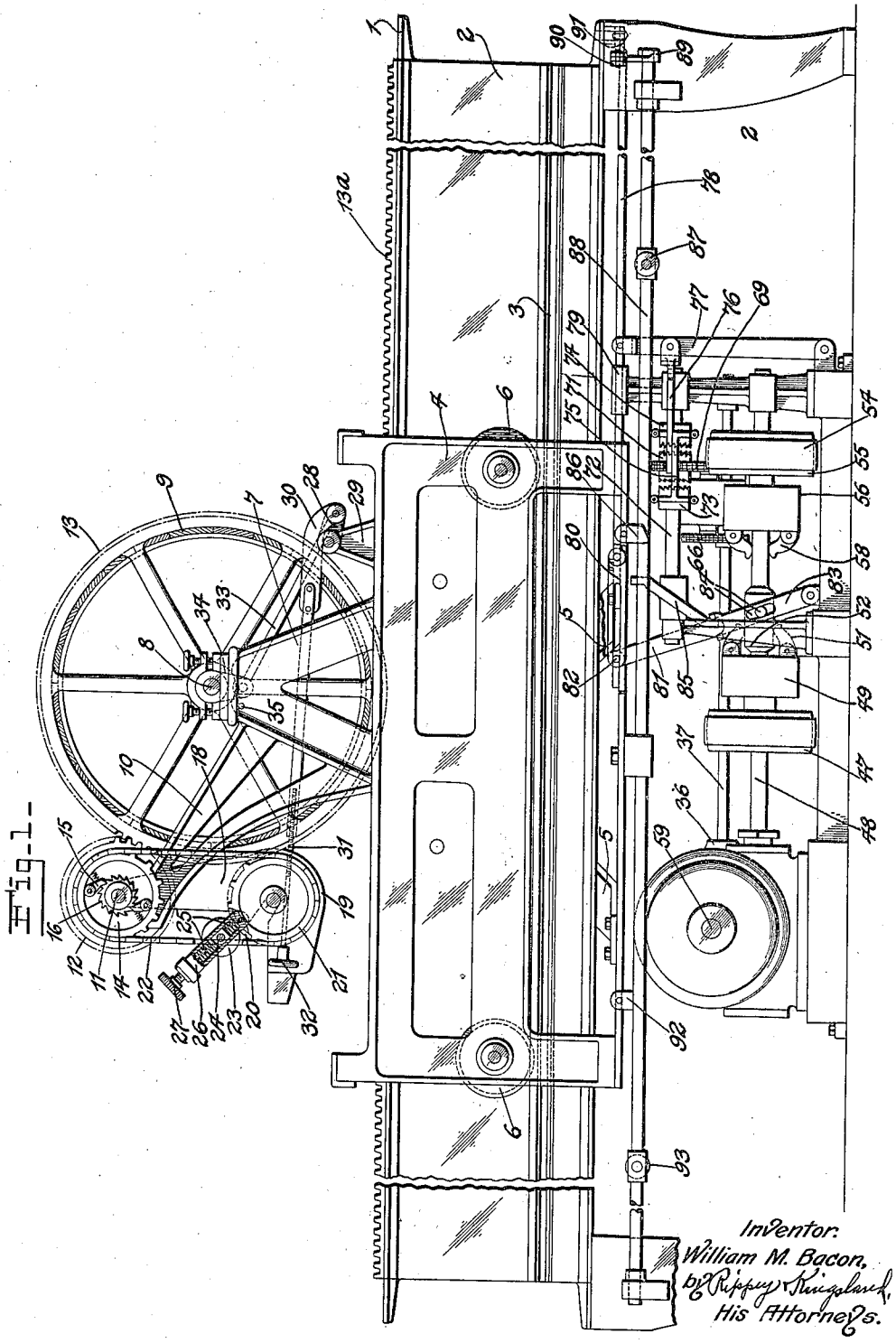

Fig. 1.

Inventor:
William M. Bacon,
by Ripley & Kingsland,
His Attorneys.

Mar. 6, 1923.

1,447,333

W. M. BACON

PRINTING MACHINE

Filed Oct. 10, 1921

4 sheets-sheet 2

Fig. 2.

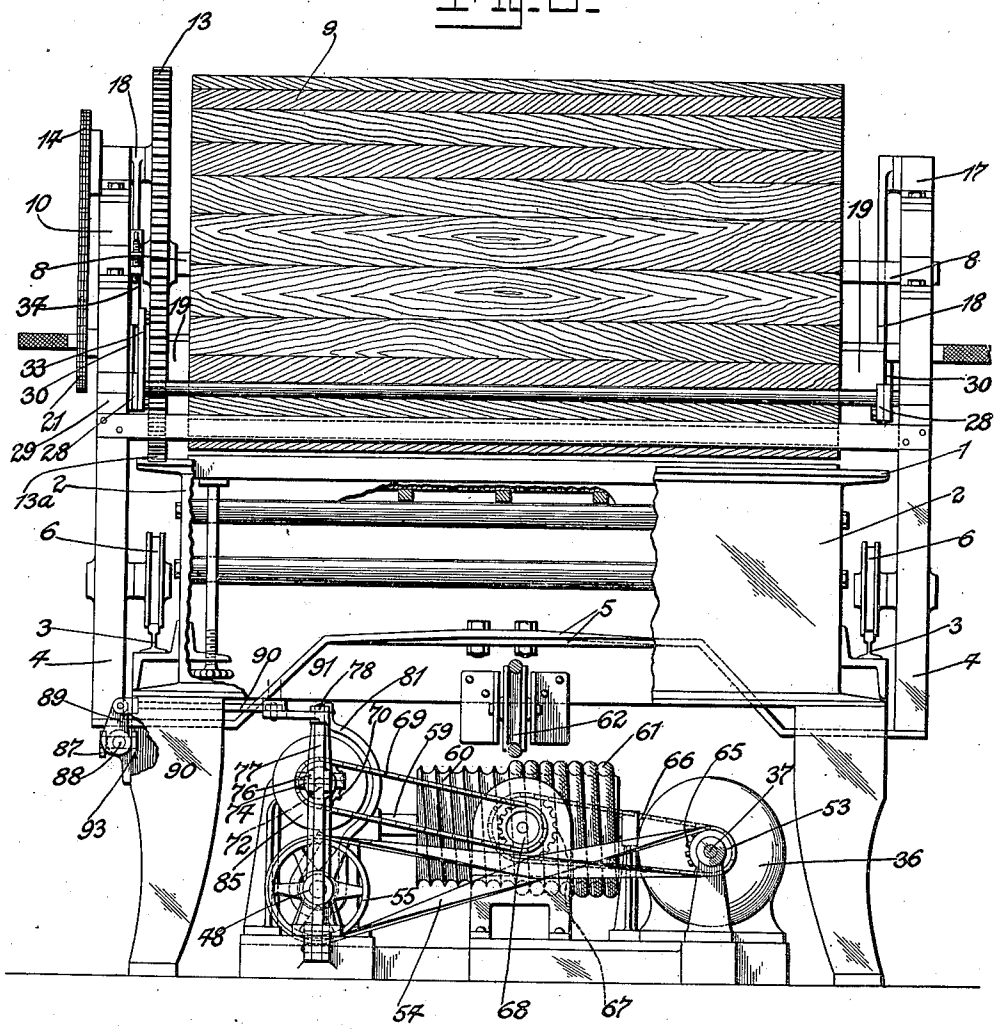

Inventor:
William M. Bacon,
by Rippey & Steigelband
His Attorneys.

Mar. 6, 1923. 1,447,333

W. M. BACON

PRINTING MACHINE

Filed Oct. 10, 1921 4 sheets-sheet 3

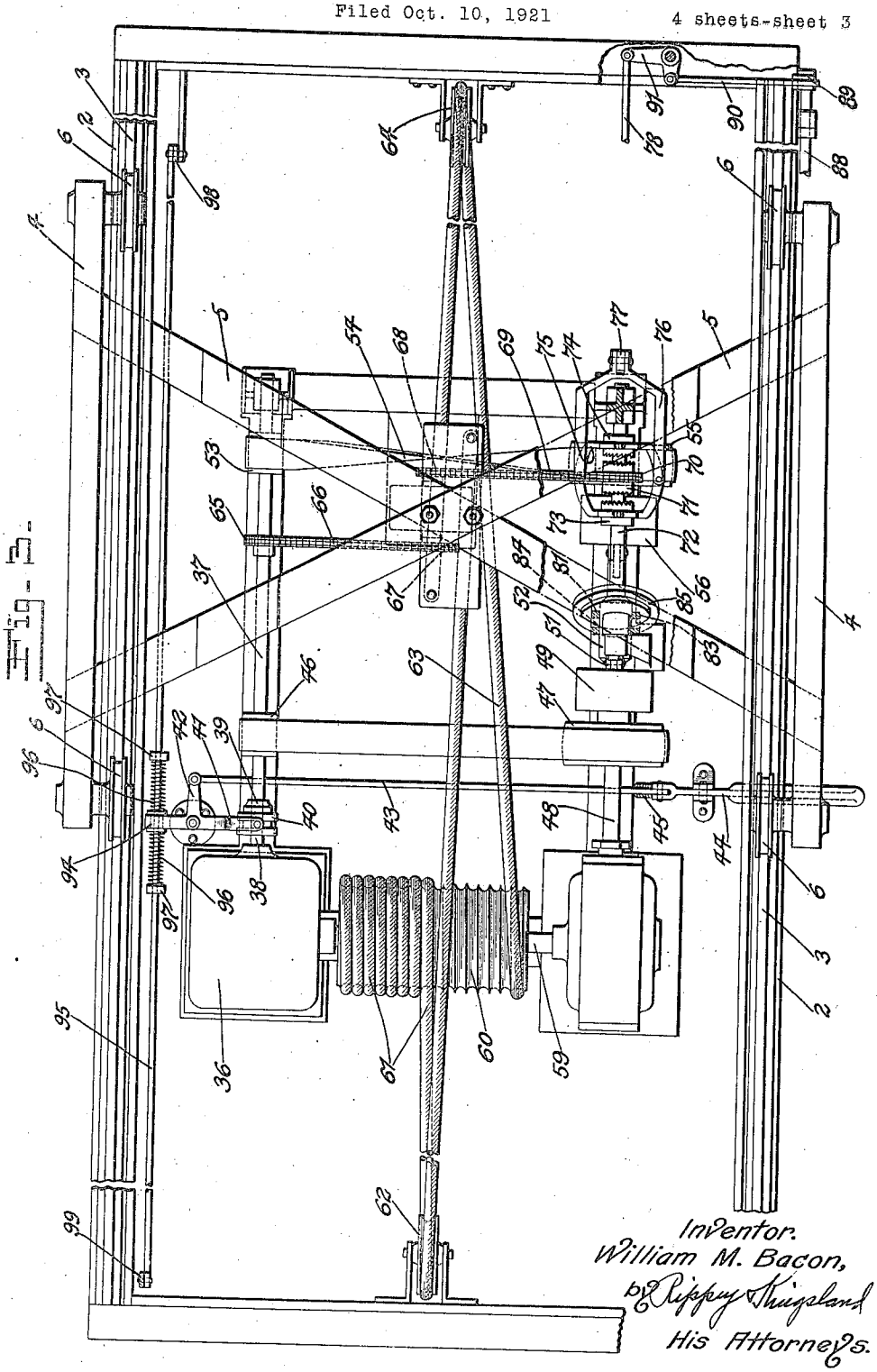

Fig. 3.

Inventor.
William M. Bacon,
by Pippey Thurgland
His Attorneys.

Mar. 6, 1923.

1,447,333

W. M. BACON

PRINTING MACHINE

Filed Oct. 10, 1921

4 sheets-sheet 4

Fig. 4.

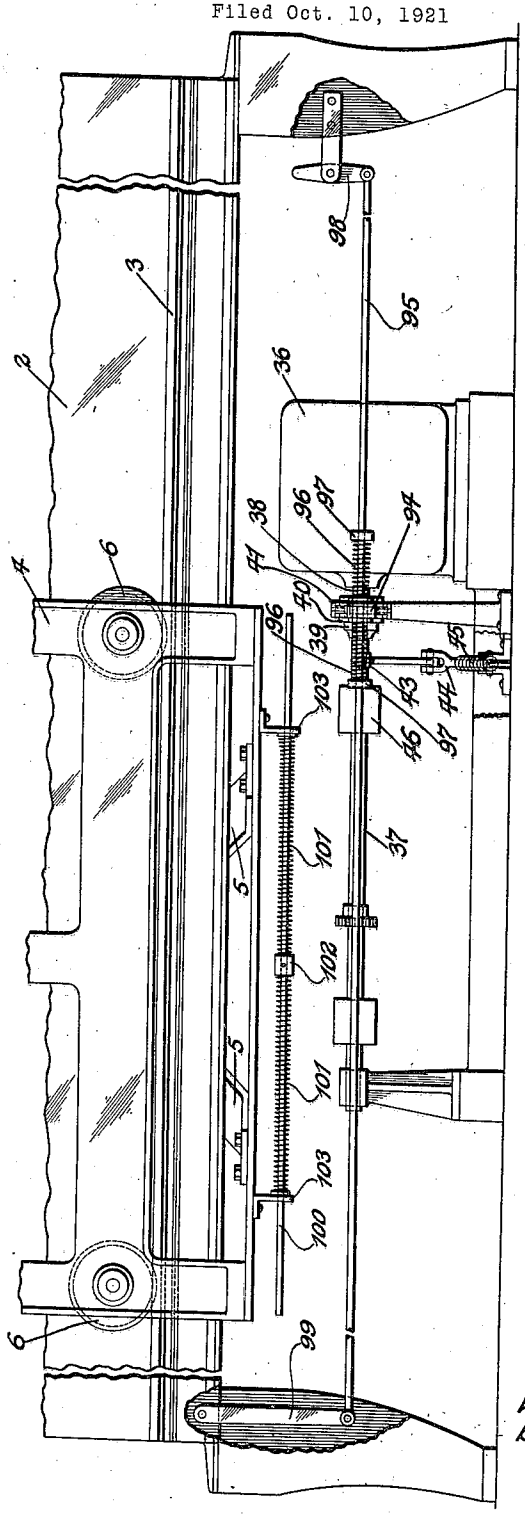

Inventor.
William M. Bacon.
by Rippey & Kingsland
His Attorneys.

Patented Mar. 6, 1923. 1,447,333

UNITED STATES PATENT OFFICE.

WILLIAM M. BACON, OF CHICAGO, ILLINOIS, ASSIGNOR TO E. S. KYLE, OF CHICAGO, ILLINOIS.

PRINTING MACHINE.

Application filed October 10, 1921. Serial No. 506,627.

To all whom it may concern:

Be it known that I, WILLIAM M. BACON, a citizen of the United States, residing at Chicago, Cook County, Illinois, have invented a new and useful Improvement in Printing Machines, of which the following is a specification.

This invention relates to printing machines of the type adapted to print upon large flat or plane surfaces such as mat board, or other fabricated materials.

An object of the invention is to provide an improved printing machine of the type mentioned, including a novel mechanism for operating and controlling the form or type cylinder which is arranged in a carriage and operates upon the material to make the desired impressions.

Another object of the invention is to provide a printing machine of the character mentioned, comprising novel mechanism for operating the carriage and thereby the impression cylinder in opposite directions adjacent to the work.

Another object of the invention is to provide novel means for reversing the direction of travel of the carriage and impression cylinder.

Another object of the invention is to provide a novel system of operating mechanism for the carriage.

Other objects will appear from the following description, reference being made to the drawing in which—

Fig. 1 is a side elevation of the machine embodying the present invention.

Fig. 2 is an end elevation.

Fig. 3 is a plan view of the operating mechanism.

Fig. 4 is a view showing the mechanism for automatically disconnecting parts of the train of carriage operating devices when the carriage has moved in either direction as far as it should move in the operation of the machine.

In the embodiment of the invention shown the table 1 for supporting the work is supported above a frame 2 having rails 3 at opposite sides thereof, preferably below the plane of the table.

A carriage, conprising side members 4 and connections 5, is provided with rollers or wheels 6 arranged to operate upon the rails 3. The carriage supports brackets or standards 7 having journal bearings at their upper ends in which the axial member 8 of the form impression cylinder 9 is journaled. In this way the impression cylinder is supported above the table 1 upon which the work is placed when the machine is in use. After the work is placed upon the table 1 the carriage is operated in alternately opposite directions, the construction, arrangement and mode of operation being such that the work is primed during the travel of the cylinder in one direction and the printing is completed during the travel of the cylinder in the opposite direction.

The paint or other substance by which the desired impressions are created upon the paper may be applied to the cylinder 9 by the form of mechanism shown. As shown, one of the standards or brackets 7 is provided with an extension 10 (Fig. 1) at one end of the cylinder 9. A shaft 11 is journaled for rotation in bearings supported by the extension 10 and supports a gear wheel 12 meshing with a large gear wheel 13 rigid with the axis 8 of the form impression cylinder. The gear wheel 13 meshes with a rack 13^a rigid with the machine frame. The shaft 11 also supports a sprocket wheel 14 which is loose on the shaft, leaving the shaft free to turn in one direction while the sprocket wheel remains stationary. The sprocket wheel 14 supports a pawl 15 arranged to engage a ratchet wheel 16 rigid with the shaft 11 so that when the shaft 11 is turned in a counter-clockwise direction for instance (Fig. 1) the sprocket wheel 14 will be rotated in the same direction, because of the engagement of the ratchet wheel with the pawl 15. But, if the shaft 11 be rotated in a clock-wise direction, for instance, the teeth of the ratchet wheel 16 will escape under the pawl 15, leaving the sprocket wheel 14 stationary while the shaft 11 continues to rotate.

The standard or bracket 7 at the opposite end of the cylinder from the bracket extension 10 supports an extension 17 (Fig. 2). A swinging arm or link 18 is pivoted to each of the extensions 10 and 17 and support a trough or basin 19 arranged to receive the paint or other material applied to the cylinder 9 by the applicator device. As shown,

the paint applicator comprises a cylinder 20 having axial members journaled for rotation in the links 18. The cylinder 20 operates within the basin 19 taking the material therefrom and applying it to the cylinder 9. A rotary motion is imparted to the cylinder 20 during travel of the carriage and the impression cylinder 9 in one direction; but during travel of the carriage and the cylinder 9 in the opposite direction the paint applicator remains idle.

A sprocket wheel 21 is rigid with the cylinder 20 or the axial member thereof and is entrained with the sprocket wheel 14 by a chain 22. Thus it will be seen that the paint applicator will operate only when the sprocket wheel 14 rotates. Looking at Fig. 1 it will be observed that the sprocket wheel 14 will be rotated only when the impression cylinder 9 rotates in a clockwise direction; that is, when the carriage supporting the cylinder moves toward the right in the construction shown in Fig. 1. When the carriage and the impression cylinder move toward the left and the impression cylinder rotates in a counter-clockwise direction, the ratchet wheel 16 escapes under the pawl 15 and does not operate the connections for operating the paint applicator. Obviously, however, this arrangement and order of operation may be varied as desired, and it is immaterial to the principle of the invention whether the paint applicator be operated in the specific manner shown or otherwise.

The paint applicator also comprises a roller 23 arranged to operate against the cylinder 20. The bearings 24 for the roller 23 are supported between springs 25. The pressure of the roller 23 against the cylinder 20 may be varied by increasing the power or tension of the springs 25 that actuate the roller 23 toward the cylinder 20. As shown, the springs 25 are enclosed within housings 26 in the outer ends of which threaded members 27 are supported for increasing or reducing the tension of the outer springs 25 in the usual manner.

Two arms 28 are supported by supports 29 and each of said arms is pivotally connected to one end of a link 30. The links 30 extend toward the paint fountain or basin and have threaded connection with stems 31 rotatively supported by the basin 19 and equipped with hand wheels 32 for manual operation. Links 33 are pivoted to the arms 28 and to collars 34 frictionally supported upon the axial member 8 of the cylinder 9. The frictional engagement of the collars 34 with the shaft 8 is sufficient to impart necessary movements to the collars 34 but to leave said collars stationary without resulting injury when the collars have been turned the desired extent by such frictional engagement. For instance, as shown in Fig. 1, the collar 34 is at the limit of its counter-clockwise turning movement, due to the fact that the link 33 is on dead center as to its lower end. This holds the paint applicator cylinder 20 close against the forms on the impression cylinder 9. The collars 34 are capable of a slight clockwise turning movement from the position shown in Fig. 1 until the extensions of the collars to which the links 33 are pivoted contact with projections 35 on the adjacent standards 7. Such clockwise movements of the collars 34 actuate the links 30 toward the left, as viewed in Fig. 1, thereby moving the paint applicator device away from the cylinder 9.

The carriage may be operated by the form of mechanism shown. The motor 36 is preferably located under the supporting frame of the machine. A shaft 37 (Figs. 2 and 3) is in axial alinement with the motor shaft 38. A clutch member 39 is attached to the shaft 37. A clutch member 40 is keyed to the motor shaft 38 and is movable thereon into and out of engagement with the clutch member 39 so that the shaft 37 may be driven from the motor shaft 38, or not, as desired. A clutch shift lever 41 is provided for shifting the clutch member 40 into and out of engagement with the clutch member 39. An arm 42 in connection with the clutch shift lever 41 has a link 43 pivoted thereto, said link leading to one arm of an angular foot lever or treadle 44. A spring 45 in connection with the treadle is arranged to operate the connections therefrom as required to shift the clutch member 40 into engagement with the clutch member 39, but the power of the spring may be overcome by positive operation of the treadle in opposition to the spring.

A pulley 46 on the shaft 37 is belted to a pulley 47 loose upon a shaft 48. The pulley 47 is in connection with one member 49 of a well-known form of clutch device, in which the clutch levers 51, pivotally supported by said member 49, are movable to and from clutching position in order to rotate the shaft 48 from the pulley 47, or not, as desired. A sleeve 52 on the shaft 48 is movable to and from position to operate the levers 51 and, as shown in Fig. 1, the sleeve 52 is between the ends of the levers 51 thereby holding said levers in clutching position with the result that the shaft 48 is rotated by the pulley 47.

A pulley 53 (Fig. 3) on the shaft 37 is similar to the pulley 46 and is belted by a twisted belt 54 to a pulley 55 similar to the pulley 47 and loosely supported upon the shaft 48.

The pulley 55 is in connection with one member 56 of a clutch device similar to the clutch member 49. Clutch levers 58 pivotally supported by the clutch member 56 are movable to and from clutching position like the clutch levers 51, in order to rotate the

shaft 48 from the pulley 55, or not, as desired. The sleeve 52 on the shaft 48 is movable to and from position to operate the levers 51 and, as shown in Fig. 1, the sleeve 52 is away from the levers 58 thereby leaving the shaft 48 driven by the pulley 47 and not by the pulley 55. However, by sliding the sleeve 52 out of engagement with the levers 51 and between the ends of the levers 58, the clutch 49 will be released leaving the pulley 47 loose upon the shaft 48 and setting the clutch 56, with the result that the shaft 48 will be rotated by the pulley 55 in a direction opposite from that in which said shaft was rotated by the pulley 47. Thus it is only necessary to shift the sleeve 52 from one clutch device to another to reverse the direction of rotation of the shaft 48.

One end of the shaft 48 is geared to a shaft 59 having a drum 60 attached thereto. One end of a rope or cable 61 is attached to the drum 60 and passes around a pulley 62 and has its opposite end secured to the frame 5 of the carriage that supports the impression cylinder. Consequently rotation of the drum 60 in one direction will wind the cable 61 thereon and move the carriage and the impression cylinder in one direction. Another cable 63 has one end attached to the drum 60 and passes around a pulley 64 and has its opposite end connected to the frame of the impression cylinder carriage. This construction permits the carriage to be moved by either of the cables 61 or 63, in opposite directions, the actuating cable winds on the drum while the other cable unwinds from the drum.

As stated, it is necessary to slide the shaft or sleeve 52 from one clutch member to another in order to reverse the direction of rotation of the shaft 48 and I will now proceed to a description of the mechanism for obtaining this result. A sprocket wheel 65 on the shaft 37 is engaged by a chain 66 which also engages a sprocket wheel 67. The sprocket wheel 67 is entrained by a well known form of speed reducing gearing (not shown) with the sprocket wheel 68. A chain 69 engages the sprocket wheel 68 and also engages a sprocket wheel 70 on a clutch member 71 supported for rotary but not axial movements upon a shaft 72. A clutch member 73 is connected to the shaft 72 for axial movements thereon into and out of engagement with one end of the clutch member 71, and a similar clutch member 74 is similarly connected with the shaft 72 at the opposite end of the clutch member 71. The two clutch members 73 and 74 are united by connections 75 so that when one of them is moved into engagement with the clutch member 71 the other is moved out of engagement therewith, and so that both of the clutch members 73 and 74 may be held disengaged from the clutch member 71 at the same time. A link 76 from the connections 75 leads to a shift lever 77 (Figs. 1 and 3) so that the operation of the lever 77 will shift the clutch members 73 and 74 as stated. The lower end of the lever 77 is pivoted to a stationary support, while the upper end is pivoted to a rod 78 supported for axial movements in a support 79. A link or slotted plate 80 is pivoted to one end of the rod 78. A lever 81 has its lower end pivoted to a stationary support and has a pin 82 on its upper end extending into the slot in the link or plate 80. An arm 83 in connection with the lever 81 has pin and slot connection 84 with the sleeve 52. As a result of this arrangement swinging movement of the lever 81—83 will shift the sleeve 52 from one clutch device to the other. A cam wheel 85 rigid on the shaft 72 engages between rollers on the arms of the bifurcated upper end of the arm 83 (Fig. 1) and is effective to operate said arm 83 as required to shift the sleeve 52 from one clutch device to the other.

Normally the clutch members 73 and 74 are out of engagement with the clutch member 71. As the carriage for the impression cylinder approaches either limit of its travel the clutch members 73 and 74 are shifted to place one or the other thereof in engagement with the clutch member 71. Such clutching engagement is maintained only until the shaft 72 is turned one-half of a revolution, as required to cause the cam 85 to shift the sleeve 52 from one clutch to the other. At the instant that the shaft 72 completes one-half of a revolution, the clutch members 73 and 74 are shifted axially to disengage the one that had been in clutching engagement with the clutch member 71.

Referring now to Fig. 1 of the drawing and assuming that the carriage for the impression cylinder is moving toward the right it will be seen that a swinging member 86 supported by the carriage will eventually engage the roller on an arm 87 projecting laterally from a rock shaft 88 and will impart a slight turning movement to said shaft. The swinging member 86 is pivoted by a familiar knuckle construction, permitting the same to assume the vertical position as shown, or to swing toward the right, but preventing leftward swinging movement thereof. The rock shaft 88 has an arm 89 rigid therewith from which a link 90 leads to the inwardly extended arm of a bell crank lever 91. The opposite arm of the bell crank lever 91 is pivoted to the rod 78. By this construction a quick axial movement is imparted to the rod 78 when the swinging member 86 turns the shaft 88. This axial movement of the rod 78 operates the lever 77 toward the left as seen in Fig. 1, thereby shifting the clutch member 74 into engagement with the clutch member 71, and caus-

ing the shaft 72 to be rotated one-half of a revolution. As stated before, this half of a revolution of the shaft 72 causes the cam 85 to shift the sleeve 52 from the clutch levers 51 to the clutch members 58 and to hold said sleeve in such position. As the lever 81 swings over toward the right the pin 82 strikes the end wall of the slot in the link or plate 80, thereby moving the rod 78 in the opposite direction from which it was moved by the rocking of the shaft 88 and thereby restoring the rod 78 to its initial and normal position. This shifting of the sleeve 52 releases the pulley 47 and clutches the pulley 55 to the shaft 48, causing the drum 60 to rotate in the opposite direction from that in which it had been rotating, and reversing the direction of travel of the carriage that carries the impression cylinder.

Still looking at Fig. 1, as the carriage moves toward the left, the swinging member 86 escapes over the roller on the arm 87 without rocking the shaft 88. As the carriage approaches the leftward extent of its movement a swinging member 92 on the carriage operates against the roller on an arm 93 extending from the rock shaft 88 on the opposite side from the arm 87. The swinging member 92 is like the swinging member 86 having a familiar knuckle pivot connection, permitting said member to gravitate to a vertical position and permitting lateral swinging movement in one direction but preventing lateral swinging movement in the opposite direction. This causes said member 92 to turn the shaft 88 in the opposite direction from that in which said shaft 88 had previously been turned, with the result that the rod 78 is moved axially and swings the upper end of the lever 77 toward the right. This raises the clutch member 73 into engagement with the clutch member 71, causing the shaft 72 to be rotated one-half of a revolution. The rotation of the shaft 72 one-half of a revolution restores it to the position shown in Fig. 1, and shifts the sleeve 52 from the clutch levers 58 into engagement with the clutch levers 51, causing the pulley 47 to rotate the shaft 48 in the opposite direction from that in which the shaft 48 had been rotated by the pulley 55. This reverses the direction of rotation of the drum 60, and thereby reverses the direction of travel of the carriage. The swinging over of the lever 81 causes the pin 82 to strike the end of the slot in the link or plate 80, as shown in Fig. 1, thereby imparting a quick axial movement to the rod 78 and restoring it to its initial or normal position. This occurs just as the swinging member 92 leaves the roller on the arm 93. Thus the clutch member 73 is quickly disengaged from the clutch member 71 and the carriage continues to move until the direction of travel is reversed as before described.

Automatic mechanism is provided for stopping the machine, except the motor thereof, in case of emergency. As shown (Fig. 3) the lever 41 has one end connected to a collar 94 on a rod 95. The collar 94 is loose on the rod 95 and is between the adjacent ends of expansion springs 96 encircling said rod. Rigid abutments 97 are on the rod 95 for the opposite ends of the springs 96. One end of the rod 95 is supported by the lower end of a lever 98, while the opposite end of said rod 95 is supported by the lower end of a link 99. The carriage that supports the impression cylinder supports a rod or abutment device 100 capable of axial movements. A pair of springs 101 encircle the rod 100 having their adjacent ends on opposite sides of a collar 102 rigid on the rod, and their opposite ends abutting against brackets 103 by which the rod is supported. The rod 100 is in alinement with the lever 98 and the link 99. Looking at Fig. 4 it will be seen that as the carriage for the impression cylinder travels to the left, the end of the rod 100 will eventually strike against the link 99. The result will be that the rod 95 will be shifted toward the left (toward the right in Fig. 3) disengaging the clutch member 40 from the clutch member 39 and permitting the machine, except the motor thereof, to stop. Similarly, as the carriage moves toward the right in Fig. 4 (toward the left in Fig. 3) the end of the rod 100 will eventually strike against the upper end of the lever 98 with the same result that the rod 95 will be shifted in a direction to disengage the clutch member 40 from the clutch member 39.

From the foregoing it will be seen that my invention is a complete machine for obtaining all of its intended results in a highly efficient and practically automatic manner. By this machine paints may be applied to mat boards or other flat surfaces, producing highly artistic effects.

I do not restrict myself to the exact construction and arrangement shown and described, nor do I restrict myself unessentially in any particulars. What I claim and desire to secure by Letters Patent, is:—

1. A machine of the character described, comprising a table for supporting the work, a carriage supported adjacent to the table, an impression cylinder supported by the carriage, a motor, mechanism driven by the motor for operating the carriage, gear devices for rotating the impression cylinder as an incident to the movement of the carriage, mechanism operated by part of said gear devices to apply paint to the impression cylinder, and means driven by the motor for reversing the direction of travel of the carriage.

2. A machine of the character described, comprising a table for supporting the work,

a carriage supported adjacent to the table, an impression cylinder supported by the carriage, a device for applying paint to the forms on the impression cylinder, mechanism for controlling said device to apply paint to the forms on the impression cylinder during movement of the carriage in one direction and for preventing said device from applying paint to the forms on the impression cylinder during movement of the carriage in the opposite direction, a motor, mechanism driven by the motor for operating the carriage, means driven by the motor for operating the carriage in opposite directions, and means controlled by the carriage for causing said operating means to reverse the direction of travel of the carriage.

3. In a machine of the character described, a supporting frame, a table in the frame for supporting the work, a carriage supported by the frame, an impression cylinder supported by the carriage for operating on the work, a drum, connections from the drum for operating the carriage in opposite directions, a shaft, racks rigid on the frame, gear wheels rigid with the impression cylinder meshing with said racks to rotate the cylinder when the carriage is moved, mechanism operated by said gear wheels to apply paint to said impression cylinder, gearing from the shaft for rotating the drum, driving mechanism for rotating said shaft, clutch devices controlling the direction of rotation of said shaft, and means controlled by the carriage for controlling said clutch devices to determine the direction of rotation of said shaft by said driving mechanism.

4. A machine of the character described, comprising a table for supporting the work, an impression cylinder for operating upon the work, a carriage supporting the impression mechanism, two rigid racks, gear wheels rigid with the impression cylinder meshing with said racks to rotate the cylinder when the carriage is moved, mechanism operated by said gear wheels to apply paint to said impression cylinder, driving mechanism for operating the carriage in opposite directions, clutch devices controlling said driving mechanism, a member for controlling said clutch devices, a lever for moving said member as required to control the clutch devices respectively, and means controlled by the carriage for operating said lever.

5. In a machine of the character described, a frame, a table in the frame for supporting the work in a stationary position, a carriage supported by the frame, a form impression cylinder supported by the carriage, mechanism for operating the carriage and thereby the form impression cylinder back and forth, a device for applying paint to the forms on the form impression cylinder, and means controlled by said cylinder for causing said device to apply paint to the forms on said cylinder during movement of the carriage in one direction and for preventing said device from applying paint to the forms on the impression cylinder during movement of the carriage in the opposite direction.

6. In a machine of the character described, a frame, a table in the frame for supporting the work in a stationary position, a carriage supported by the frame, a form impression cylinder supported by the carriage, mechanism for operating the carriage and thereby the form impression cylinder back and forth, a device for applying paint to the forms on the form impression cylinder, means controlled by said cylinder for causing said device to apply paint to the forms on the said cylinder during movement of the carriage in one direction and for preventing said device from applying paint to the forms on the impression cylinder during movement of the carriage in the opposite direction, and mechanism for operating the carriage alternately in opposite directions.

7. In a machine of the character described, a frame, a table in the frame for supporting the work, a carriage, a form impression cylinder supported by the carriage above the table, mechanism controlled by the form impression cylinder for applying paint to the forms on said cylinder during movement of the carriage in one direction, and permitting the carriage to move in the opposite direction without applying paint to the forms on the cylinder, and mechanism for operating the carriage alternately in opposite directions.

8. In a machine of the character described, a frame, a table in the frame for supporting the work, a carriage, a form impression cylinder supported by the carriage above the table, mechanism for moving the carriage back and forth, a device for applying paint to the form impression cylinder, means operated by the cylinder for operating said device, and means controlled by the cylinder for moving said device to position to apply paint to the cylinder during movement of the carriage in one direction and arranged to move said device out of position to apply paint to the cylinder during movement of the carriage in the opposite direction.

9. In a machine of the character described, a table for supporting the work, a carriage, a form impression cylinder supported by the carriage above the table, a device for applying paint to the form impression cylinder, means controlled by the cylinder for moving said device to position to apply paint to the cylinder during movement of the carriage in one direction and for moving said device out of position to apply paint to

the cylinder during movement of the carriage in the opposite direction, and mechanism for moving the carriage back and forth as required to move the impression cylinder in opposite directions above the table.

10. In a machine of the character described, a table for supporting the work, a carriage, a form impression cylinder supported by the carriage above the table, a device for applying paint to the form impression cylinder, means controlled by the cylinder for moving said device to position to apply paint to the cylinder during movement of the carriage in one direction and for moving said device out of position to apply paint to the cylinder during movement of the carriage in the opposite direction, mechanism for moving the carriage back and forth as required to move the impression cylinder in opposite directions above the table, and means operated by the carriage for causing said mechanism to reverse the direction of movement of the carriage.

11. In a machine of the character described, a table for supporting the work, a rack rigid at each side of the table, a carriage, an impression cylinder supported by the carriage above the table, a pair of gear wheels rigid with the impression cylinder meshing with said racks to rotate the impression cylinder when the carriage is moved, mechanism operated by said gear wheels to apply paint to said impression cylinder, a fountain supported by said carriage for supplying paint to said mechanism, means for moving the carriage back and forth, and devices controlled by said gear wheels for moving said mechanism to position in which it will not only apply paint to said impression cylinder during movement of the impression cylinder in one direction.

12. In a machine of the character described, a stationary table for supporting the work, a form impression cylinder supported above the table, mechanism for operating the form impression cylinder back and forth, a device for applying paint to the form impression cylinder, and means controlled by the cylinder for moving said device to position to apply paint to the cylinder during movement of the cylinder in one direction and out of position to apply paint to the cylinder during movement of the cylinder in the opposite direction.

13. In a machine of the character described, a carriage, a form impression cylinder supported by the carriage, mechanism for moving the carriage back and forth, a paint fountain, a roller operatively supported in the paint fountain for applying paint to the form impression cylinder, means operated by the cylinder for moving said fountain and said roller to position to apply paint to the cylinder, and means for varying the pressure of the roller against the cylinder.

14. In a machine of the character described, a table for supporting the work, a carriage, a form impression cylinder supported by the carriage, a paint fountain supported by the carriage, driving mechanism for operating the carriage to move the form impression cylinder back and forth upon the work, means supported by the carriage for delivering paint from the paint fountain to the form impression cylinder during movement of the carriage in one direction, devices for preventing said means from applying paint to the form impression cylinder during movement of the carriage in the other direction, and means controlled by the carriage for causing the driving mechanism to reverse the direction of movement of the carriage.

15. In a machine of the character described, a table for supporting the work, a carriage, a form impression cylinder supported by the carriage for operating on the work, a paint fountain supported by the carriage, connections for moving the carriage alternately in opposite directions, a shaft for operating said connections, means supported by the carriage for delivering paint from the paint fountain to the form impression cylinder during movement of the carriage in one direction, devices for preventing said means from applying paint to the form impression cylinder during movement of the carriage in the other direction, driving mechanism for rotating the shaft, and means controlled by the carriage for causing the driving mechanism to rotate said shaft alternately in opposite directions.

16. In a machine of the character described, a table for supporting the work, mechanism for producing impressions on the work on the table, connections for moving said mechanism alternately in opposite directions, a paint fountain, a roller operating in said fountain for applying paint to said mechanism for producing impressions, means for moving said fountain and said roller to position to apply paint to said mechanism during movement of said mechanism in one direction and out of position to apply paint thereto during movement of said mechanism in the opposite direction, a shaft for operating said connections, a wheel loose on said shaft for rotating said shaft in one direction, a clutch device operable to clutch and to release said wheel relative to the shaft, and means controlled by the carriage for controlling said clutch device.

17. In a machine of the character described, a table for supporting the work, a carriage, a form impression cylinder supported by the carriage, connections for moving said carriage alternately in opposite di-

rections, gearing for rotating said form impression cylinder when the carriage is moved, a paint fountain supported by the carriage, a roller operating in said fountain, means for causing said roller to apply paint to said form impression cylinder during movement of the carriage in one direction and not to apply paint thereto during movement of the carriage in the opposite direction, a shaft for operating said connections, a wheel for turning said shaft in one direction, an additional wheel for rotating said shaft in the opposite direction, a device movable to and from position to cause first one and then the other of said wheels to rotate said shaft, a lever for shifting said device, and means controlled by the carriage for operating said lever to shift said device from one position to another.

18. In a machine of the character described, a table for supporting the work, a carriage, a form impression cylinder supported by the carriage, connections for moving the carriage alternately in opposite directions, gearing for rotating said form impression cylinder when the carriage is moved, a paint fountain supported by the carriage, a roller operating in said fountain, means for causing said roller to apply paint to said form impression cylinder during movement of the carriage in one direction and not to apply paint thereto during movement of the carriage in the opposite direction, a shaft for operating said connection, a motor, a drive shaft rotated continuously in one direction by the motor, mechanism for rotating said first-named shaft alternately in opposite directions by the continuous rotation of said drive shaft in one direction, and means controlled by the carriage for causing said mechanism to reverse the direction of rotation of said first-named shaft while said drive shaft continues to rotate in one direction.

19. In a machine of the character described, a table for supporting the work, a carriage, a form impression cylinder supported by the carriage, connections for moving said carriage alternately in opposite directions, gearing for rotating said form impression cylinder when the carriage is moved, a paint fountain supported by the carriage, a roller operating in said fountain, means for causing said roller to apply paint to said form impression cylinder during movement of the carriage in one direction and not to apply paint thereto during movement of the carriage in the opposite direction, a shaft for operating said connections, to move the carriage alternately in opposite directions, a motor, a continuously rotating shaft driven by the motor, mechanism operated by said second-named shaft for rotating said first-named shaft alternately in opposite directions, a lever controlling said mechanism, and means operated by the carriage for operating said lever.

20. In a machine of the character described, a table for supporting the work, a carriage, a form impression cylinder supported by the carriage, connection for moving said carriage alternately in opposite directions, a shaft for operating said connections to move the carriage alternately in opposite directions, a motor, a continuously rotating shaft driven by the motor, mechanism operated, by said second-named shaft for rotating said first-named shaft alternately in opposite directions, devices controlling the direction of rotation of said first-named shaft by said mechanism, a lever for controlling said devices, a cam for operating said lever, and mechanism operated by said second-named shaft and controlled by said carriage for operating said cam.

21. In a machine of the character described, a table for supporting the work, a carriage, a form impression cylinder supported by the carriage, connections for moving said carriage alternately in opposite directions, a shaft for operating said connections to move the carriage alternately in opposite directions, a motor, a continuously rotating shaft driven by the motor, mechanism operated by said second-named shaft for rotating said first-named shaft alternately in opposite directions, devices controlling the direction of rotation of said first-named shaft by said mechanism, a lever for controlling said devices, a cam for operating said lever, a shaft supporting said cam, mechanism operated by said second-named shaft for rotating the shaft supporting the cam, and means operated by the carriage controlling the operation of said cam supporting the shaft by said last-named mechanism.

22. In a machine of the character described, a carriage, a form impression cylinder supported by the carriage, a rotary drum, connections from the drum for moving the carriage alternately in opposite directions, gearing for rotating said form impression cylinder when the carriage is moved, a paint fountain supported by the carriage, a roller operating in said fountain, means for causing said roller to apply paint to said form impression cylinder during movement of the carriage in one direction and not to apply paint thereto during movement of the carriage in the opposite direction, a rotary shaft for rotating the drum, a motor, a continuously rotating shaft driven by the motor, mechanism operated by said second-named shaft for rotating said first-named shaft alternately in opposite directions, and mechanism operated by said second-named shaft controlling the direction of rotation of said first-named shaft by the second shaft.

23. In a machine of the character described, a carriage, a form impression cylinder supported by the carriage, a drum, connections from the drum to the carriage for moving the carriage alternately in opposite directions, a shaft for rotating said drum, a motor, a continuously rotating drive shaft operated by the motor, mechanism operated by the drive shaft for rotating said first-named shaft alternately in opposite directions, and means operated by the drive shaft and controlled by the carriage for controlling said first-named mechanism to reverse the direction of rotation of said first-named shaft.

24. In a machine of the character described, a carriage, a form impression cylinder supported by the carriage, a drum, connections from the drum for moving the carriage alternately in opposite directions, a shaft for operating said connections to move the carriage alternately in opposite directions, a drive shaft, mechanism operated by the drive shaft for rotating the first-named shaft alternately in opposite directions, a clutch member controlling said mechanism, a lever for operating said clutch member, a cam for operating said lever, and means driven by the drive shaft for operating said cam.

25. In a machine of the character described, a carriage, a form impression cylinder supported by the carriage, a drum, connections from the drum for moving the carriage alternately in opposite directions, a shaft for operating said connections to move the carriage alternately in opposite directions, a drive shaft, mechanism operated by the drive shaft for rotating the first-named shaft alternately in opposite directions, a clutch member controlling said mechanism, a lever for operating said clutch member, a cam for operating said lever, means driven by the drive shaft for operating said cam, and devices under control of the carriage for causing said cam to be operated by said means.

26. In a machine of the character described, a carriage, a form impression cylinder supported by the carriage, connections for moving the carriage alternately in opposite directions, a shaft for operating said connections to move the carriage alternately in opposite directions, a drive shaft, mechanism operated by the drive shaft for rotating the first-named shaft alternately in opposite directions, a clutch member controlling said mechanism, a lever for operating said clutch member, a cam for operating said lever, means driven by the drive shaft for rotating said cam, and devices under control of the carriage for causing said cam to be operated by said means, as the carriage approaches the limit of its movement in either direction.

27. In a machine of the character described, a carriage, a form impression cylinder supported by the carriage, connections for moving the carriage alternately in opposite directions, a shaft for operating said connections for moving the carriage alternately in opposite directions, a drive shaft, means for imparting a continuous rotary motion to the drive shaft, mechanism operated by the drive shaft for rotating the first-named shaft alternately in opposite directions, a clutch member supported by the first-named shaft for controlling said mechanism, a lever for operating said clutch member, a cam for operating said lever, and means driven by the drive shaft for operating said cam as the carriage approaches the limit of its movement in either direction.

28. In a machine of the character described, a carriage, a form impression cylinder supported by the carriage, connections for moving the carriage alternately in opposite directions, a shaft for operating said connections, a motor, a drive shaft, means for rotating the drive shaft by the motor, mechanism operated by the drive shaft for rotating said first-named shaft alternately in opposite directions, means operated by the drive shaft for controlling said mechanism to change the direction of rotation of the first-named shaft, and devices controlled by the carriage near each end of movement of the carriage for causing said means to change the direction of rotation of the first-named shaft by said mechanism.

29. In a machine of the character described, a carriage, a form impression cylinder supported by the carriage, a rotary shaft, means operated by the rotary shaft for moving the carriage alternately in opposite directions, a drive shaft, a motor, means for rotating the drive shaft from the motor, mechanism operated by the drive shaft for rotating the first-named shaft alternately in opposite directions, a cam controlling said mechanism, means operated by the drive shaft for operating said cam intermittently, and devices for causing said cam to be operated intermittently by said means.

30. In a machine of the character described, a carriage, a form impression cylinder supported by the carriage, a rotary shaft, means operated by said rotary shaft for moving the carriage alternately in opposite directions, driving mechanisms for rotating said shaft in opposite directions, a clutch member controlling said driving mechanisms, a cam for moving said clutch member to position to control either of said driving mechanisms, a shaft for rotating said cam, devices for turning said last-named shaft to rotate said cam, and means under control of the carriage for causing said devices to rotate said last-named shaft.

31. In a machine of the character described, a carriage, a form impression cylinder supported by the carriage, a rotary shaft, means operated by the rotary shaft for moving said carriage alternately in opposite directions, a drive shaft, mechanism operated by the drive shaft for rotating said rotary shaft in one direction, another mechanism operated by the drive shaft for rotating said rotary shaft in the other direction, a clutch member for controlling said mechanisms alternately, a rotary element, connections operated by the drive shaft for rotating said element, and means operated intermittently by said element to shift the clutch member to positions to control said mechanisms respectively.

32. In a machine of the character described, a carriage, a form impression cylinder supported by the carriage, a rotary shaft, means operated by the rotary shaft for moving said carriage alternately in opposite directions, a drive shaft, mechanism operated by the drive shaft for rotating said rotary shaft in one direction, another mechanism operated by the drive shaft for rotating said rotary shaft in the other direction, a clutch member for controlling said mechanisms alternately, a rotary element, connections operated by the drive shaft for rotating said element, means operated intermittently by said element to shift the clutch member to positions to control said mechanisms respectively, and mechanism under control of the carriage for causing said rotary element to operate said means when the carriage approaches the end of its movement in either direction.

33. In a machine of the character described, a carriage, a form impression cylinder supported by the carriage, a rotary shaft, two wheels loose on said shaft, devices for clutching said wheels to the shaft, a sleeve on the shaft for operating said devices to clutch the wheels to the shaft, a lever for operating said sleeve, mechanism for operating said lever, means under control of the carriage controlling the operation of said lever by said mechanism, connections operated by said shaft for moving the carriage, a paint fountain supported by the carriage, gear devices for rotating the form impression cylinder as an incident to movement of the carriage, mechanism operated by a part of said gear devices for taking paint from the paint fountain and applying the paint to the cylinder, and mechanism controlled by a part of said gear devices for moving said paint applying mechanism to position in which it will not apply paint to said impression cylinder during movement of the impression cylinder in one direction.

34. In a machine of the character described, a movable carriage, mechanism for moving the carriage in opposite directions, a form impression cylinder, a shaft mounted in the carriage supporting said cylinder, a rack, a gear in connection with said shaft meshing with said rack to rotate said cylinder as an incident to the movement of the carriage in either direction, a device for applying paint to the forms on the cylinder, mechanism operated by said gear for operating said device, and means operated by said shaft for moving said device to position to apply paint to the forms on the cylinder during movement of the carriage in one direction and for moving said device away from such position during movement of the carriage in the opposite direction.

35. In a machine of the character described, a carriage, mechanism for moving said carriage in opposite directions, a shaft journaled for rotation in said carriage, a form impression cylinder on said shaft, a gear wheel on said shaft, a stationary rack with which said wheel meshes to impart rotary movement to said shaft and said cylinder during movement of the carriage in either direction, a device for applying paint to the forms on the cylinder, and means operated by said shaft for moving said device to position to apply paint to the forms on the cylinder during movement of the carriage in one direction and for moving said device from such position during movement of the carriage in the opposite direction.

WILLIAM M. BACON.