Aug. 26, 1947. C. J. McWHORTER 2,426,517

GUN PERFORATOR

Filed Dec. 26, 1944 2 Sheets-Sheet 1

FIG. 1.

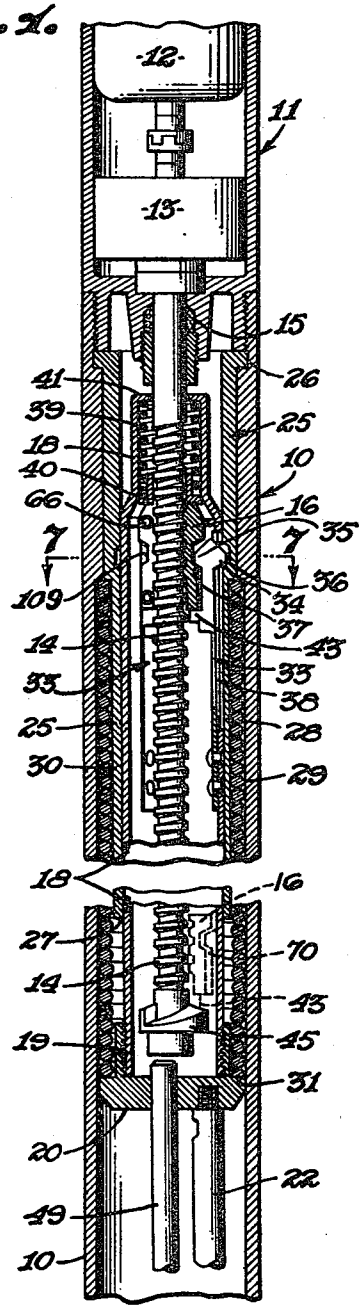

FIG. 7.

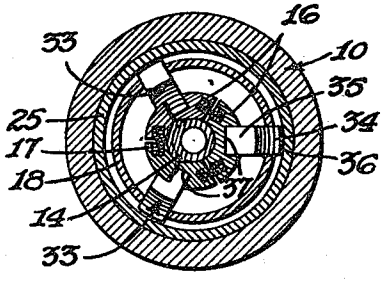

FIG. 8.

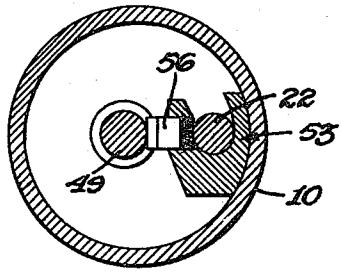

FIG. 9.

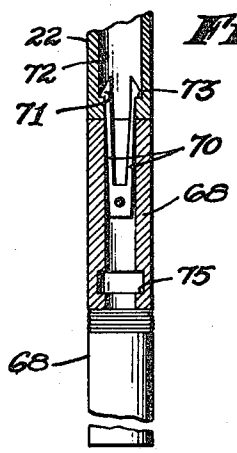

INVENTOR.
CULLEN J. McWHORTER
BY Lyle Wilson
ATTORNEY

Aug. 26, 1947. C. J. McWHORTER 2,426,517

GUN PERFORATOR

Filed Dec. 26, 1944 2 Sheets-Sheet 2

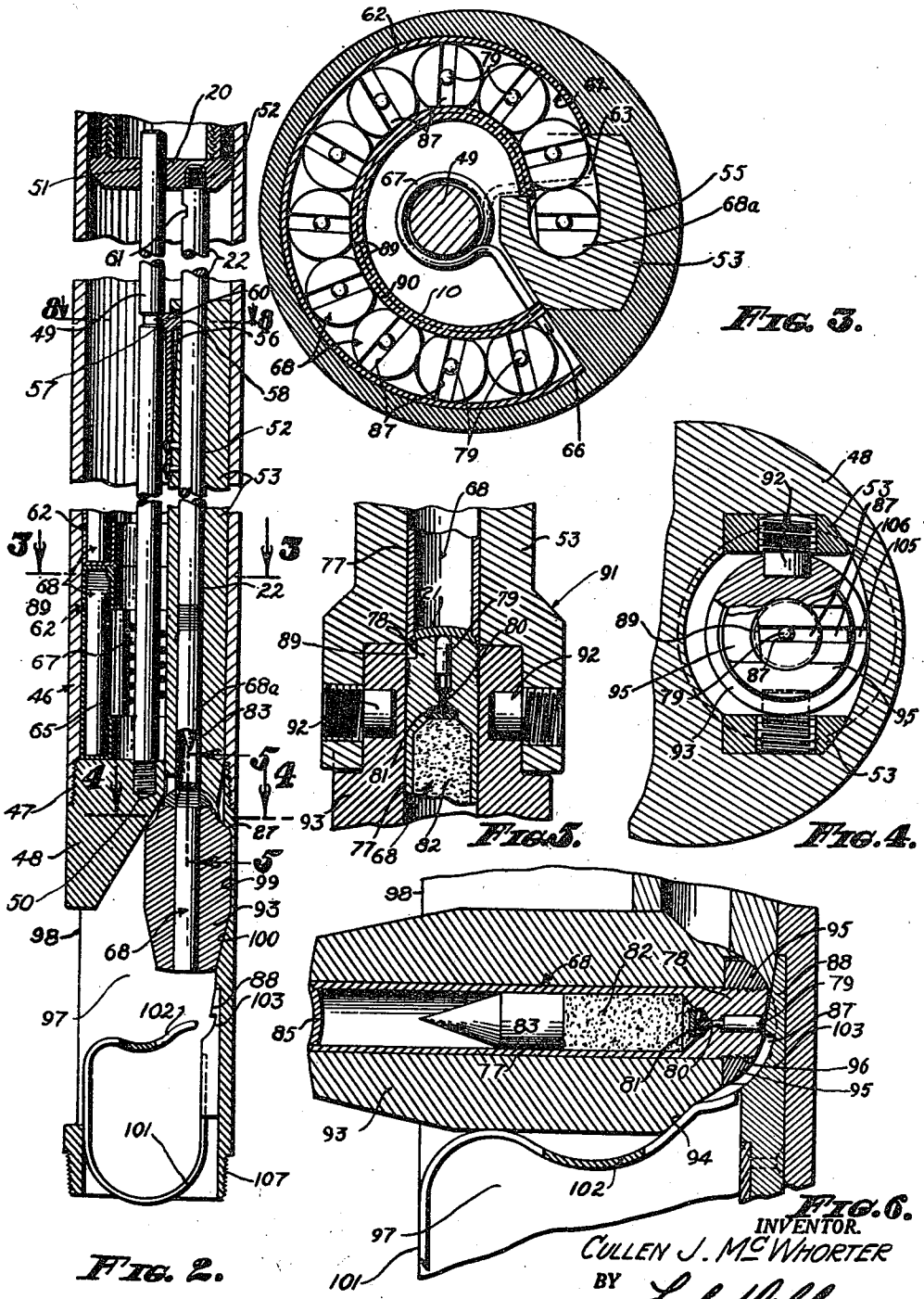

FIG. 2.

FIG. 3.

FIG. 5.

FIG. 4.

FIG. 6.

INVENTOR.
CULLEN J. McWHORTER
BY Lyle Miller
ATTORNEY

Patented Aug. 26, 1947

2,426,517

UNITED STATES PATENT OFFICE

2,426,517

GUN PERFORATOR

Cullen J. McWhorter, Odessa, Tex.

Application December 26, 1944, Serial No. 569,834

19 Claims. (Cl. 164—0.5)

1

My invention relates to gun perforators and finds its principal application in devices adapted to be lowered into a well casing for the purpose of firing bullets through the casing walls to form openings for the entrance of oil and this application is a continuation in part of my copending application, Serial No. 492,636, filed June 28, 1943. Among the objects of my invention are:

First, to provide a gun perforator wherein gun cartridges are initially stored in one or more magazines and fed into a gun barrel adapted to move from a vertically directed loading position to a laterally directed firing position;

Second, to provide a gun perforator which utilizes the elements and actuating mechanism of my "side wall sampling tool" described in the aforesaid copending application, with little change in its construction, the gun cartridges being capable of conforming substantially in size and shape to the core cup therein disclosed; and

Third, to provide a gun perforator wherein a large number of gun cartridges may be carried in a gun structure of relatively short length and light weight.

These and other objects, advantages and features of novelty will be evident hereinafter in connection with the drawings which illustrate preferred embodiments of the invention and in which the same reference characters refer to the same or similar parts throughout the several figures:

Figure 1 is a fragmentary longitudinal sectional view of the upper portion of my gun perforator;

Figure 2 is a fragmentary longitudinal sectional view of the lower position of my tool, continuing from Figure 1, showing the gun barrel in a retracted position;

Figure 3 is an enlarged transverse sectional view through 3—3 of Figure 2, illustrating one of the cartridge magazines;

Figure 4 is an enlarged fragmentary transverse sectional view through 4—4 of Figure 2, showing partially in elevation and partially in section the breech end of the gun barrel;

Figure 5 is a fragmentary longitudinal sectional view of the breech portion of the gun barrel and its connection to the elevating mechanism;

Figure 6 is an enlarged fragmentary longitudinal sectional view showing the gun barrel in its extended firing position;

Figure 7 is an enlarged transverse sectional view taken at 7—7 of Figure 1; and

Figure 8 is an enlarged transverse sectional view taken at 8—8 of Figure 2;

Figure 9 is a fragmentary longitudinal view

2

taken through one of the cartridges, the plunger and one of the plunger extension units attached to the end of the plunger.

In my previous application hereinbefore mentioned a series of sampler cups were stored in magazines and fed, one at a time, into a core barrel. In the present invention a series of gun cartridges similar in proportion to the sampler tubes are stored in magazine units and fed, one at a time, into a gun barrel. The operating mechanism, to accomplish the necessary relative movement of the parts in the present case, are essentially the same as those shown in my aforementioned application and, therefore, only one of the suitable alternative operating mechanisms is herein illustrated.

Referring now primarily to Figures 1, 2, 7 and 8, the actuating mechanism of the present invention is enclosed in a shell 10 which makes screwed coupling with a coaxial housing 11 which may in turn be connected at its upper end by suitable means to a supporting conductor cable (not shown). Within the housing 11 is an electric motor 12 and a gear reduction unit 13. The gear reduction unit 13 drives a jack screw 14 which extends downwardly coaxial with the housing 10 through a packing gland 15 provided in the lower end of the said housing 11. Mounted around the threaded portion of the jack screw 14 is a traveler 16 which is constructed in the form of a split nut, comprising two or three internally threaded segmental portions which are separable radially sufficiently to clear the jack screw threads by the force of helical springs 17 acting tangentially under compression between the traveler segments, as shown in Figure 7.

Surrounding the traveler 16 and extending downwardly therefrom is a tubular cage structure 18, the lower end of which is threadedly connected at 19 with a plunger head 20 shown at the lower end of the apparatus of Figure 1 and fragmentarily shown at the upper end of the continuation thereof in Figure 2. The plunger head 20 carries a downwardly projecting plunger rod 22 which operates in connection with apparatus of the invention, as more fully described hereinafter.

Between the tubular cage 18 and surrounding shell 10 is fitted a cylindrical latching liner 25 which extends from a supporting flange 26 seated in the upper end of the shell 10 downwardly to a point 27 located a substantial distance above the top of the beforementioned plunger head 20 when the plunger head is located in its uppermost position, as shown in Figure 1. The lower portion of

the latching liner 25, extending downward from shoulder 26, is formed with a section 28 of reduced external diameter which, together with an adjacent section 29 of reduced internal diameter in the shell 10, forms an annular cavity adapted to house a helical actuating spring 30. The actuating spring 30 is maintained under compression at all times and thus applies force downwardly upon the outer marginal portion 31 of the beforementioned plunger head 20.

The beforementioned traveler 16 is operatively connected with the cage 18 by means of flexible latching arms 33 which are rigidly attached at their lower ends to the inside of the lower enlarged portion of the cage 18, and extend upwardly with slight inward inclination to points opposite the traveler 16. Each latching arm 33 is provided with outwardly extending lugs 34 and inwardly extending lugs 35 adapted, respectively, to engage an annular groove 36 formed in the inner surface of the latching liner 25 or engage the sockets 37 formed in the outer faces of the segments comprising the traveler 16. Longitudinal slots 38 are provided through the walls of the cage 18 to accommodate the lugs 34 and the latching arms 33 when they are deflected to their maximum outward positions. The traveler 16 is urged downwardly between the latching arms 33 by means of a traveler spring 39 which, when the device is in the position shown in Figure 1, is positioned and acts under compression between the bushing 40 bearing upon the upper end of the segments of the traveler 16 and the upper inner end 41 of the cage 18.

The latching arms 33 are provided with inwardly extending shoulders 43 which, in the position shown in Figure 1, extend under and support the lower ends of the segments of the traveler 16. These shoulders 43 are adapted when the latching arms and traveler are in their lowermost position, as indicated by dotted lines in Figure 1, to rest upon the upper spiral surface of a retraction head 45 which is fixed to the lower end of the jack screw 14. In this position the outer lugs 34 of the arms 33 have been moved down to a position below the lower end 27 of the liner 25 and are thus freed to move radially outward through the slots 38 a sufficient distance to allow the segments of the traveler to open and disengage the jack screw threads.

The actuating mechanism hereinbefore described is adapted to cause controlled reciprocation of the plunger head 20, as will be described hereinafter.

Located below the plunger head 20, in the lower end of the shell 10, is a magazine container-section shown at 46. The lower end of the magazine shell section 46 is screw-threaded at 47 to the upper end of a body member 48. A magazine rod 49 is also screw-threaded at 50 into the upper end of the body member 48 and extends longitudinally through the central portion of the magazine shell 46 and through a guide opening 51 in the central portion of the plunger 20. The magazine rod 49 thus extends the length of the magazine shell and is eccentrically located with respect to the axis, as best shown in Figure 3. The upper end of the magazine rod 49 fits slidably through a suitable guide opening 51 in the plunger head 20 as before mentioned to provide for downward motion of the plunger head 20 in operation, as hereinafter described.

The beforementioned plunger rod 22 depends from the lower surface of the plunger head 20 and extends slidably into the bore 52 of an elevator drive member 53. The elevator drive member 53 makes a sliding fit in a suitable guide recess formed in the inner surface of the magazine shell section 46, as shown in section at 55 in Figure 3. Secured to the inner upper side of the elevator member 53 is a flexible latch member 56 having a double-ended head carrying inner and outer lugs 57 and 58, respectively. The inner lug 57 is adapted to engage an annular notch 60 encircling the magazine rod 49 and in operation be retained therein by reason of the restraining, sliding contact of the outer end of the outer lug 58 with the surface of the plunger rod 22, thereby serving to lock the elevator member 53 in its fully retracted position, as shown in Figure 2. The plunger rod 22 is provided with a notch 61 formed in its upper, inner surface, said notch being adapted to receive the outer lug 58 of the head of the latch member 56 at the downward limit of the motion of the plunger rod 22 into the elevator member bore, thereby to allow the inner lug 57 to disengage the groove 60 and unlock and free the elevator 53 for downward movement together with the plunger rod 22 and plunger head 20 for effecting extension of the gun barrel from its retracted position, as will be more fully described hereinafter.

The lower end of the magazine shell section 2 is adapted to receive a plurality of containers or magazine units as shown at 62. Each magazine unit is in the form of a rectangular tube bent approximately in the form of a C to follow the contour of the inner wall of the lower end of the magazine shell, as best shown in cross section in Figure 3. One open end extremity of the magazine unit abuts the exposed side of the elevator member 53 and registers with an elongated side opening 63 provided therein. An intermediate portion of the inner wall of each magazine unit is cut away to form a slot 65 to receive the outer free end 66 of a feed spring 67 which is coiled around the magazine rod 49. The said outer end 66 of the feed spring is adapted to bear against the side of the end one of a series of cylindrical cartridges 68 which fit and are contained side by side slidably within the magazine unit. The outer end of the spring 67 is anchored by suitable means to the magazine rod 49 around which it is wound.

In order to adapt the plunger rod 22 to the loading of the cartridges from a plurality of superimposed magazines it is necessary to extend the length of the plunger rod as each magazine is emptied in succession from the uppermost one to the lowermost one of the series. For this purpose it is necessary to provide a dummy cartridge or a plunger extension unit of the type shown in Figure 9 in each magazine except the lowermost magazine in the chamber. This extension unit is located in each magazine in position to be ejected from the magazine last, after ejection of the load of cartridges therein. The extension units comprise a tubular body 68 which is fitted at the upper end with a bifurcated latching spring 70 having outwardly directed hooks 71. The lower end of the plunger rod 22 is provided with a hollow section 72 having a flange 73 which, when it is lowered into contact with the end of the extension unit and over the latching member, interlock with the hooks 73 of the spring 70, thereby firmly coupling the plunger rod 22 and extension unit 68 together end to end.

The lower end of each of the extension units is provided with internal flanges 75 of the same form as that in the plunger rod 22 for attach-

ment of other extension units as the magazine units are emptied.

Each cartridge 68 comprises a tubular barrel liner section 77 and a breech end portion 78, as best shown in Figure 6. The breech end portion of said cartridge is provided with a small axial opening enlarged at its outer end to receive a firing pin 79. The opening is closed at its inner end by a fluid seal member 80 constructed in the form of a short pin of reduced diameter having a head which underlies the inner end of the firing pin. The said inner end of the firing pin 79 is correspondingly reduced in diameter to form a punch adapted to drive into the opening which receives the fluid seal member 80 and forces the fluid seal member 80 into a percussion element 81 provided at the breech end of the barrel liner. The inner end of the barrel liner receives an explosive charge or cartridge 82 and against the outer end of this is positioned a bullet 83. The outer end of the barrel liner is preferably closed, fluid-tight, by a seal disc 85. The outer surface of the breech end portion 78 of the barrel liner is serrated by means of a plurality of annular grooves, as shown at 96.

The firing pin 79, when it is in its outermost position, does not extend beyond a flush position with respect to the breech end of the cartridge, but sets within a cross slot 87. As will be brought out more fully hereinafter, the cross slot 87 is adapted to align with a firing pin actuator cam 88, and in order that it occupy a correctly oriented position within the gun barrel for entrance of the actuator cam into the slot 87, one corner of the breech end 78 of each cartridge is provided with an aligning notch 89 into which fits a guide rib 90. The guide rib 90 is carried by and extends around the inner upper periphery of the magazine unit, as best shown in Figure 3.

The lower end of the elevator member 53 is shaped to form a yoke, as shown at 91, the bifurcated members of which are pivotally connected by pins 92 to the rear end of a gun barrel 93. The gun barrel is shaped in the form of a heavy walled tubular member, its upper breech end having a semi-cylindrical surface having a center line of curvature coinciding with the axis of the elevator hinge pins 92 in the yoke 91 and fitting a corresponding cylindrical bearing surface in the crotch of the yoke. Flanking the cylindrically curved ends of the barrel 93 are sloping shoulders 94. The breech bore of the barrel 93 is adapted to slidably receive a cartridge and its breech end portion is provided with a split recoil buhsing 95 having internal serrations 96. The split bushing 85 is formed of two diametrically positioned elements slidably supported in suitable lateral recesses in the breech and having exposed surfaces of cylindrical form conforming with the adjacent surface of the gun breech and adapted to bear against the adjacent surface of the yoke in the locking position and against the recoil shoe in the firing position. The serrations 96 of the recoil bushing and those on the breech end of the cartridge are adapted, in operation, to engage one another in such a manner as to allow the cartridge to be moved forwardly through the recoil bushing into the gun barrel breech, but not in the reverse direction.

In its fully retracted loading position, as shown in Figure 2, the barrel 93 depends from yoke 91 of the elevator drive member 53 and in axial alignment therewith, as shown in Figure 2. In this position the barrel 93 is contained within the large cavity 97 which opens into the side of the

body member 48 through a lateral opening 98. The gun barrel, when in its retracted and loading position, as shown in Figure 2, sets into a recess 99 formed in the back side of the cavity 97. The extended or lower end of the barrel is tapered and the recess 100 conforms to form an outwardly sloping, deflecting shoulder which, upon downward movement of the barrel, in operation, directs the lower end of the barrel 93 outwardly in pivotal motion around the yoke pins 92 toward the opening 98.

Within the cavity 97 is a spring 101 in the form of a U-shaped strip, one end of which is fastened to the rear side of the cavity 97 opposite the opening 98. The other portion of the spring extends down through a U-shaped arc and upwardly along the opening 98 on the opposite side and is provided at the end with an inturned, bifurcated extremity portion 102 to form a deflector element. The deflector element is adapted to coact with the shoulder 100 when the gun barrel is moved downwardly to swing the barrel 93 into a lateral position, as shown in Figure 6. The extremity of the deflecting element 102 engages one of the shoulders 94 provided at the breech end of the barrel 93 to yieldably retain the barrel in the laterally directed position.

At the rear side of the barrel cavity 97 is mounted a recoil shoe 103 which conforms to the exposed cylindrical contour of the breech end of the barrel. The lower end of the shoe may also serve as a support for the inner end of the spring 101, as shown. The recoil shoe 103 carries adjacent its upper end an outwardly extending wedge shaped fin or actuator cam 88 adapted to ride through the cross slots 105 and 106 provided in the gun barrel breech and recoil bushing, respectively, and then into aligned slot 87 provided in the breech end of the cartridge.

The operation of the actuating mechanism for the gun perforator is as follows: Initially the parts of the actuating mechanism, including traveler 16 and shoulder 43, may be assumed to be in the dotted line position shown in the lower portion of Figure 1. The latching arms 33 are in their outwardly expanded positions with the shoulders 43 resting on the top and circumferential portions of the cam surface of the retraction head 45 and the threads of the expanded traveler segments 16 disengaged and free of the threads of the jack screw 14. When the jack screw 14 is rotated clockwise as viewed in Figure 7 by means of the electric motor 12, acting through the gear reduction unit 13, the latching arms 33 and traveler 16 are initially raised upwardly by the spiral cam surface. When the top of the cam spiral is reached the steps in the shoulders 43 are freed from contact with the circumference of the cam, thereby permitting the latching arms to move radially inward. Further rotation of the retraction head 45 raises the outer lugs 34 into contact with the lower end 27 of the latching liner 25, thereby forcing the latching arms to move radially inward and carry the segments of the traveler 16 into engagement with the jack screw.

Continued rotation of the jack screw then causes the threads of the traveler and jack screw to mesh and if the latching arms have not previously aligned with the sockets 109 in each traveler segment the traveler 16 turns relative to the latching arms until the lugs 35 drop into the said sockets to restrain the traveler segments from further rotation with respect to the jack

screw. When this condition obtains, continued rotation of the jack screw raises the traveler 16 and cage 18, together with the plunger head 20 which is threadedly attached thereto, thereby compressing the actuator spring 30.

As the traveler reaches its upper position limit, the outwardly extending lugs 34 of the latching arms, which during the upward travel have been restrained by the inner surface of the liner 25, drop into the groove 36 in the said liner 25, thereby momentarily locking the cage 18 against further movement either upward or downward. Continued rotation of the jack screw results in continued upward movement of the traveler 16 against the compression of the traveler spring 39 until the lower portion of the traveler located below the sockets 109 is drawn through and clears the inwardly extending shoulders 43 of the latching arms 33. Sufficient outward movement of the latching arms 33 to permit the inner lugs 35 to be withdrawn from the sockets 109 and to move over the traveler shank is made possible by the movement of the outer lugs 34 into clearance space provided in the beforementioned grooves 36.

This stage of the operation can be determined by noting the reading on an ammeter or similar instrument associated with the surface power supply of the electric motor 12 to determine when the motor has picked up the additional load of compressing the traveler spring 39 and thus to permit the motor to be turned off after the actuating spring 30 has been fully compressed, but before it has been released, so that the operating cycle may be interrupted with the parts in the retracted position shown in Figures 1 and 2 ready for repetition of the operating cycle when desired.

As soon as the lower shank end of the carrier 16 clears the lugs 35 the latching arms 33 are released inwardly, allowing the outer lugs 34 to move out of the groove 36. The cage 18 is thus unlocked from both the liner 25 and the traveler 16 with the result that the spring 30 drives the plunger head 20 downward.

During the initial downward movement of the plunger head 20, prior to actuation of the elevator drive member 53, the plunger rod 22 moves downwardly through the bore 52 in the said elevator 53 a distance equal to the length of one cartridge. During this relative motion between the plunger 22 and the elevator drive member 53, the uppermost inner cartridge, located as shown at 68a in Figures 2 and 3, is pushed by the lower end of the said plunger rod 22 into the breech end of the gun barrel while the gun barrel remains in the aligned position shown in Figure 2. Upon continued downward motion of the plunger head 20 into actuating engagement with the elevator drive member 53, no further relative motion between plunger rod 22 and the elevator member 53 takes place, but the resultant downward motion of the plunger 22 and the elevator member 53 together causes the gun barrel to move from its vertical position, as shown in Figure 2, to the laterally directed position as shown in Figure 6.

When the apparatus is loaded in readiness for operation several magazine units 62 are normally contained one on top of another in the magazine shell. In operation the cartridges of the uppermost magazine are removed first, the last one in the magazine being a dummy cartridge, as shown in Figure 9 which becomes attached to the end of the plunger 5 to serve as an extension to the plunger to adapt it to move the cartridges from the next lower magazine. When a plurality of magazines is employed the last cartridge in each of the magazines, except the lowermost magazine, are dummy cartridges of this construction, adapted to attach themselves end to end as the magazines are progressively exhausted to extend the plunger as required to move the cartridges from the next lower magazine.

As before described, on each downstroke of the plunger head 20 the initial portion of the motion moves the plunger rod 22 a distance equal to the length of one cartridge with respect to the elevator drive member 53 to force a cartridge into the breech of the gun barrel. During this initial motion of the plunger rod 22 the elevator drive member 53 is locked against motion by means of the lug 57 of latch 56 seated in the groove 60 in the magazine rod 49. At the end of the downward stroke of the plunger rod 22 into the drive member 53 the outer lug of the latch 56 drops into the notch 61 of the plunger rod 22, locking the plunger and drive bar together against further relative motion and at the same time releasing the inner lug 57 of the latch from groove 60 in the magazine rod 49, thereby permitting the elevator member 53 to move downwardly together with the plunger and thus to swing the barrel 93 from its vertical or loading position to its lateral or firing position, as shown in Figure 6. As the gun reaches its lateral position the actuating cam 88 engages the firing pin 79, causing the firing pin to shear the fluid seal pin 80 and fire the percussion element 81. Upon return movement of the plunger head after firing the gun, both the plunger rod 22 and elevator member 53, still locked together at 58—61, move upwardly together, returning the barrel to its vertical or loading position. At this point the lug 57 of latch 56 falls back into the groove 60, locking the elevator member 53 against further movement and freeing the plunger rod 22 for continuation of its upward stroke through the drive member 53 to complete the cycle of operation for the loading and firing of one cartridge. On each down stroke of the plunger rod 22 the previously fired cartridge present in the gun barrel is forced out through the muzzle by the entrance of the next succeeding unfired cartridge through the breech. The thus ejected empty cartridge falls through the bifurcation formed in the end 102 of the spring 101 and is retained in the cavity formed below the spring 101 in an adjoining housing which may be threadedly connected at 107.

It will be seen from inspection of the aforementioned application that the cartridges herein shown are similar in their essential external features to the core liner shown in said copending application, and that the construction therein shown is adaptable to the handling of the gun cartridges. Consequently, the invention herein disclosed and claimed concerns particularly those features which convert my previously described structure to a gun perforator.

Various changes and alternate arrangements may be made within the scope of the appended claims, in which it is my intention to claim all novelty inherent in the invention.

I claim:

1. A gun perforator comprising a gun body member, a gun barrel associated with said body member, means for moving said gun barrel between a longitudinally directed and a laterally directed position with respect to the axis of said gun body member, means for feeding cartridges into said gun barrel when in its longitudinally

directed position, and means for firing said cartridges as said gun barrel moves into its laterally directed position.

2. A gun perforator comprising a gun body member, a gun barrel associated with said body member, means for moving said gun barrel between a longitudinally directed and a laterally directed position with respect to the axis of said gun body member, a magazine associated with said body member, means operative when said gun barrel is in the longitudinally directed position for feeding cartridges from said magazine into said gun barrel, and means operative as said gun barrel moves into the laterally directed position for firing cartridges in said gun barrel.

3. A gun perforator comprising a gun body member, a gun barrel housed within said body member, means for moving said gun barrel between a longitudinally directed and a laterally directed position with respect to the axis of said gun body member, a magazine associated with said body member, means operative when said gun barrel is in the longitudinally directed position for feeding cartridges from said magazine into said gun barrel, and means operative as said gun barrel moves into the laterally directed position for firing cartridges in said gun barrel.

4. A gun perforator comprising a gun body member, a cavity in said gun body member having a lateral outlet opening, a gun barrel associated with said gun body member and housed within said cavity, means for moving said gun barrel in said cavity between a longitudinally directed and a laterally directed position with respect to the axis of said body member, said gun barrel being directed through said lateral opening when in said laterally directed position, a magazine associated with said body member, means operative when said gun barrel is in the longitudinally directed position for feeding cartridges from said magazine into said gun barrel, and means operative as said gun barrel moves into the laterally directed position for firing cartridges in said gun barrel.

5. A gun perforator comprising a gun body member, a cavity in said gun body member having a lateral outlet opening, a gun barrel associated with said gun body member and housed within said cavity, a bore through said gun barrel from muzzle to breech, means for moving said gun barrel in said cavity between a longitudinally directed and a laterally directed position with respect to the axis of said body member, said gun barrel being directed through said lateral opening when in said laterally directed position, a magazine associated with said body member, means operative when said gun barrel is in the longitudinally directed position for feeding cartridges from said magazine into the breech end of said gun barrel bore and ejecting a previously fired cartridge from the muzzle end of said gun barrel bore, and means operative as said gun barrel moves into the laterally directed position for firing cartridges in said gun barrel.

6. A gun perforator comprising a gun body member, a tubular reciprocable drive member slidably mounted in said gun body member, means to impart reciprocating motion to said drive member, a gun barrel pivotally attached to the end portion of said drive member, means operative upon reciprocation of said drive member for pivoting said gun barrel between a longitudinally directed and a laterally directed position with respect to the axis of said gun body member, a magazine associated with said body member, means for feeding cartridges from said magazine into said tubular drive member, means operative when said gun barrel is in the longitudinally directed position for injecting cartridges from said tubular drive member into said gun barrel, and means operative as said gun barrel moves into the laterally directed position for firing cartridges in said gun.

7. A gun perforator comprising a gun body member, a cavity in said gun body member having a lateral outlet opening, a tubular reciprocable drive member slidably mounted in said gun body member and extending into said cavity, means to impart reciprocating motion to said drive member, a gun barrel pivotally attached to the end portion of said drive member in said cavity, means operative upon reciprocation of said drive member for pivoting said gun barrel in said cavity between a longitudinally directed and a laterally directed position with respect to the axis of said gun body member, said barrel being directed through said lateral opening when in said laterally directed position, a magazine associated with said body member, means for feeding cartridges from said magazine into said tubular drive member, means operative when said gun barrel is in the longitudinally directed position for injecting cartridges from said tubular drive member into said gun barrel, and means operative as said gun barrel moves into the laterally directed position for firing cartridges in said gun.

8. A gun perforator comprising a gun body member, a cavity in said gun body member having a lateral outlet opening, a tubular reciprocable drive member slidably mounted in said gun body member and extending into said cavity, means to impart reciprocating motion to said drive member, a gun barrel pivotally attached adjacent its breech end to the end portion of said drive member in said cavity, a bore through said gun barrel from muzzle to breech, means operative upon reciprocation of said drive member for pivoting said gun barrel in said cavity between a longitudinally directed and a laterally directed position with respect to the axis of said gun body member, said barrel being directed through said lateral opening when in said laterally directed position, a magazine associated with said body member, means for feeding cartridges from said magazine into said tubular drive member, means operative when said gun barrel is in the longitudinally directed position for injecting cartridges from said drive member into the breech end of said gun barrel, and means operative as said gun barrel moves into the laterally directed position for firing cartridges in said gun.

9. A gun perforator comprising a gun body member, a cavity in said gun body member having a lateral outlet opening, a tubular reciprocable drive member slidably mounted in said gun body member and extending into said cavity, means to impart reciprocating motion to said drive member, a gun barrel pivotally attached adjacent its breech end to the end portion of said drive member in said cavity, a bore through said gun barrel from muzzle to breech, means operative upon reciprocation of said drive member for pivoting said gun barrel in said gun body between a longitudinally directed and a laterally directed position with respect to the axis of the said gun body member, said barrel being directed through said lateral opening when in said laterally directed position, a magazine associated with said body member, means for feeding cartridges from

aid magazine into said tubular drive member, neans operative when said gun barrel is in the ongitudinally directed position for injecting carridges from said drive member into the breech nd and ejecting previously fired cartridges from he muzzle end of said gun barrel, and means perative as said gun barrel moves into the latrally directed position for firing cartridges in aid gun.

10. A gun perforator comprising a gun body nember, a cavity in said gun body member having a lateral outlet opening, a tubular reciproca-le drive member having an axial passage therein nd slidably mounted in said gun body member nd extending into said cavity, means to impart eciprocating motion to said drive member rela-ive to said gun body member, a gun barrel piv-tally attached adjacent its breech end to the end ortion of said drive member in said cavity, a ore through said gun barrel from muzzle to reech, means operative upon reciprocation of aid drive member for pivoting said gun barrel n said gun body between a longitudinally directed nd a laterally directed position with respect to he axis of said gun body member, said barrel eing directed through said lateral opening when n said laterally directed position and being co-axial with said tubular drive member and ax-ially interconnecting said gun bore and said pas-sage in said drive member when said gun barrel is in the longitudinally directed position, a maga-zine associated with said body member, means for feeding cartridges from said magazine into the passage in said tubular drive member, a plunger slidably positioned within the said passage in said tubular drive member, means to impart axial reciprocation to said plunger relative to said drive member, said plunger being adapted to inject cartridges from said tubular drive member into the breech end of said gun body member and to eject previously fired cartridges from the muzzle of said gun barrel when said gun body member is in its longitudinally directed position, and means operative as said gun barrel moves into the laterally directed position for firing cartridges in said gun.

11. A gun perforator according to claim 9 and means associated with said gun body member for receiving and retaining said previously fired shell ejected from the muzzle of said gun barrel.

12. A gun perforator comprising a gun body member, a gun barrel associated with said gun body member, said gun barrel having a bore therethrough from muzzle to breech, a magazine associated with said gun body member, means for feeding cartridges from said magazine and injecting them into the breech end of said gun body member, means for firing said cartridges in said gun barrel, and means to eject previously fired cartridges from the muzzle end of said gun barrel.

13. A gun perforator comprising a gun body member, a gun barrel associated with said gun body member, said gun barrel having a bore therethrough from muzzle to breech, a magazine associated with said body member, cartridges in said magazine, said cartridges each including a gun barrel liner to contain a bullet and an explosive charge and having a percussion firing means for said charge associated therewith, means for feeding said cartridges from said magazine and injecting them into the breech of said gun barrel, means associated with said gun body and adapted to actuate said percussion firing means for firing said cartridges in said gun barrel, and means to eject barrel liners of previously fired cartridges from the muzzle of said gun barrel.

14. A gun perforator according to claim 12 in which said means for firing the cartridges comprises a percussion sensitive element, a firing pin associated with said percussion sensitive element and exposed at the breech end of said cartridge, and a cam associated with said gun body member and adapted to engage and actuate said firing pin.

15. A gun perforator comprising a gun body member, a tubular reciprocable drive member slidably mounted in said gun body member, means to impart reciprocating motion to said drive member, a gun barrel pivotally attached to the end portion of said drive member, said gun barrel having a bore therethrough from muzzle to breech, means operative upon reciprocation of said drive member for pivoting said gun barrel between a longitudinally directed and a laterally directed position with respect to the axis of said gun body member, a magazine associated with said body member, cartridges in said magazine, said cartridges each including a gun barrel liner to contain a bullet and an explosive charge and having a percussion firing means for said charge associated therewith, means for feeding said cartridges from said magazine into said tubular drive member, means operative when said gun barrel is in the longitudinally directed position for injecting cartridges from said drive member into the breech end of said gun barrel bore, and means associated with said body member and operative as said gun barrel moves into the laterally directed position to actuate said percussion firing means for firing said cartridges in said gun barrel.

16. A gun perforator comprising: a gun body member; a gun barrel associated with said body member; means for moving said gun barrel between a longitudinally directed and a laterally directed position with respect to the axis of said gun body member; means for feeding cartridges into said gun barrel when in its longitudinally directed position; and recoil receiving means for gripping the breech end of said cartridges as said gun barrel moves into its laterally directed position.

17. A gun perforator comprising: a gun body member; a gun barrel associated with said body member; means for moving said gun barrel between a longitudinally directed and a laterally directed position with respect to the axis of said gun body member; means for feeding cartridges into said gun barrel when in its longitudinally directed position; recoil receiving means for gripping the breech end of said cartridges; and means for firing said cartridges as said gun barrel moves into its laterally directed position.

18. A gun perforator comprising: a gun body member; a tubular reciprocable drive member slidably mounted in said gun body member; means to impart reciprocating motion to said drive member; a gun barrel pivotally attached to the end portion of said drive member, said gun barrel having a bore therethrough from muzzle to breech; means operative upon reciprocation of said drive member for pivoting said gun barrel between a longitudinally directed and a laterally directed position with respect to the axis of said gun body member; a magazine associated with said gun body member; cartridges in said magazine, said cartridges each including a gun barrel liner to contain a bullet and an explosive charge and having a percussion responsive firing means for said charge associated therewith; means for

feeding said cartridges from said magazines to said tubular drive member; means associated with said magazine and said cartridges for orienting said cartridges in said drive member; means operative when said gun barrel is in the longitudinally directed position for injecting cartridges from said drive member into the breech end of said gun barrel bore; and means associated with said body member and operative as said gun barrel moves into the laterally directed position to actuate said percussion firing means for firing said cartridges in said gun barrel.

19. A gun perforator comprising a gun body member; a tubular reciprocable drive member slidably mounted in said gun body member; means to impart reciprocating motion to said drive member; a gun barrel pivotally mounted adjacent the end portion of said drive member, said gun barrel having a bore therethrough from muzzle to breech; means operative upon reciprocation of said drive member for pivoting said gun barrel between a longitudinally directed and a laterally directed position with respect to the axis of said gun body member; a magazine associated with said body member; cartridges in said magazine, said cartridges each including a gun barrel liner to contain a bullet and an explosive charge and having a percussion firing means for said charge associated therewith; guide means in said magazine and adapted to register with guide surfaces formed on each of said cartridges to orient said

cartridges with respect to said tubular drive member; means for feeding said cartridges from said magazine into said tubular drive member; means operative when said gun barrel is in the longitudinally directed position for ejecting cartridges from said drive member into the breech end of said gun barrel bore; and means associated with said body member and operative as said gun barrel moves into the laterally directed position to actuate said percussion firing means for firing said cartridges in said gun barrel.

CULLEN J. McWHORTER.

REFERENCES CITED

The following references are of record in the file of this patent:

UNITED STATES PATENTS

Number	Name	Date
2,061,835	Haines	Nov. 24, 1936
2,064,503	Temple	Dec. 15, 1936
2,069,794	Woodberry	Feb. 9, 1937
2,041,209	Ridley	May 19, 1936
2,210,983	MacClatchie	Aug. 13, 1940
1,416,828	Holmes	May 23, 1922
2,169,671	Walker	Aug. 15, 1939
2,267,627	Thompson	Dec. 23, 1941

OTHER REFERENCES

Ser. No. 315,157, Schlumberger (A. P. C.), published May 11, 1943.

Certificate of Correction

Patent No. 2,426,517. August 26, 1947.

CULLEN J. McWHORTER

It is hereby certified that errors appear in the printed specification of the above numbered patent requiring correction as follows: Column 5, line 55, for buhsing" read *bushing*; line 56, for the numeral "85" read *95*; and that the said Letters Patent should be read with these corrections therein that the same may conform to the record of the case in the Patent Office.

Signed and sealed this 11th day of November, A. D. 1947.

[SEAL]

THOMAS F. MURPHY,
Assistant Commissioner of Patents.