May 7, 1963 M. L. SUGARMAN, JR 3,088,386

ELECTROPHOTOGRAPHIC PHOTOCOPY MACHINE

Filed Nov. 16, 1959 9 Sheets-Sheet 1

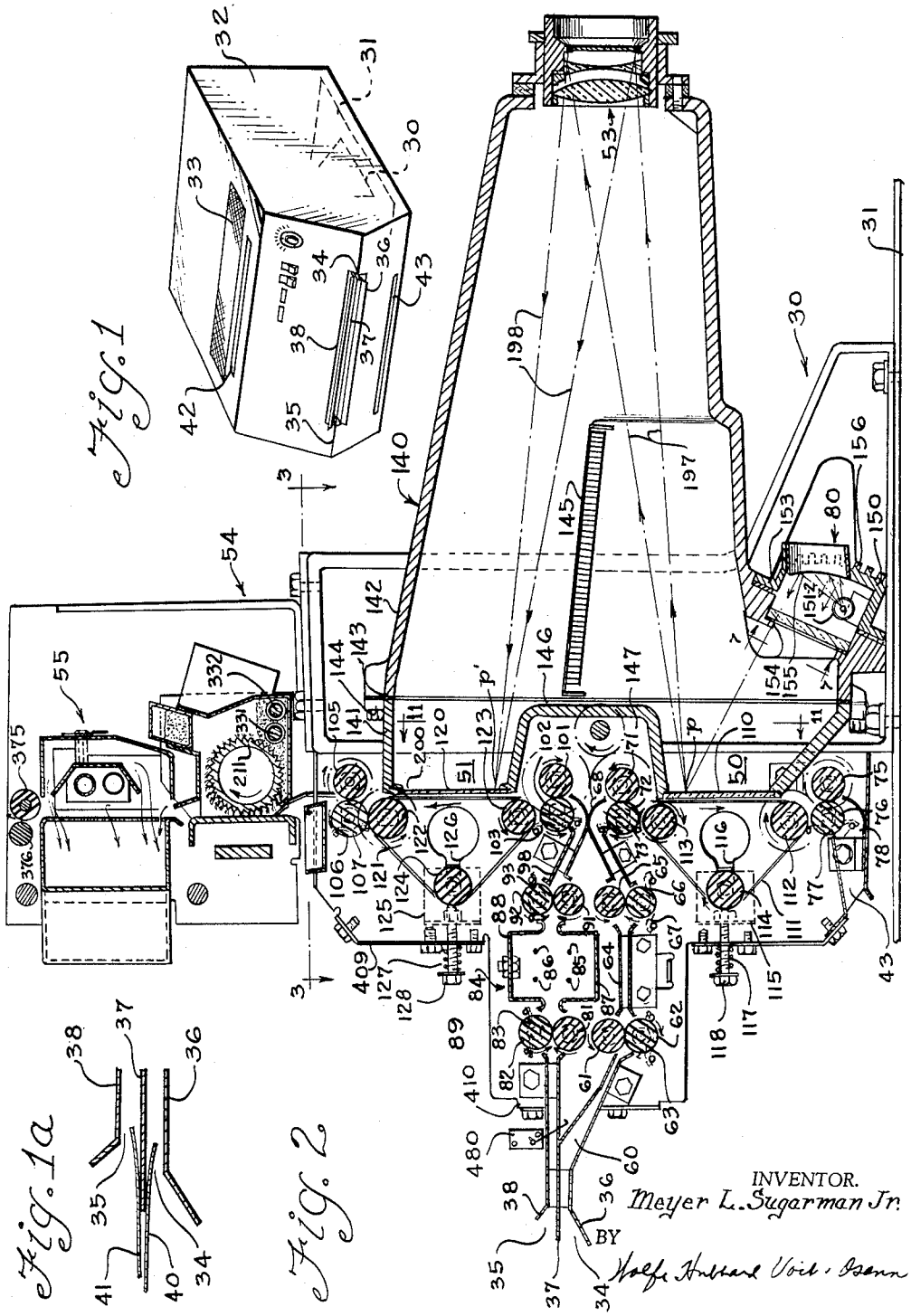

Fig. 1

Fig. 1a

Fig. 2

INVENTOR.
Meyer L. Sugarman Jr.
BY
Wolfe, Hubbard, Voit & Osann

May 7, 1963 M. L. SUGARMAN, JR 3,088,386

ELECTROPHOTOGRAPHIC PHOTOCOPY MACHINE

Filed Nov. 16, 1959 9 Sheets-Sheet 2

Fig. 3

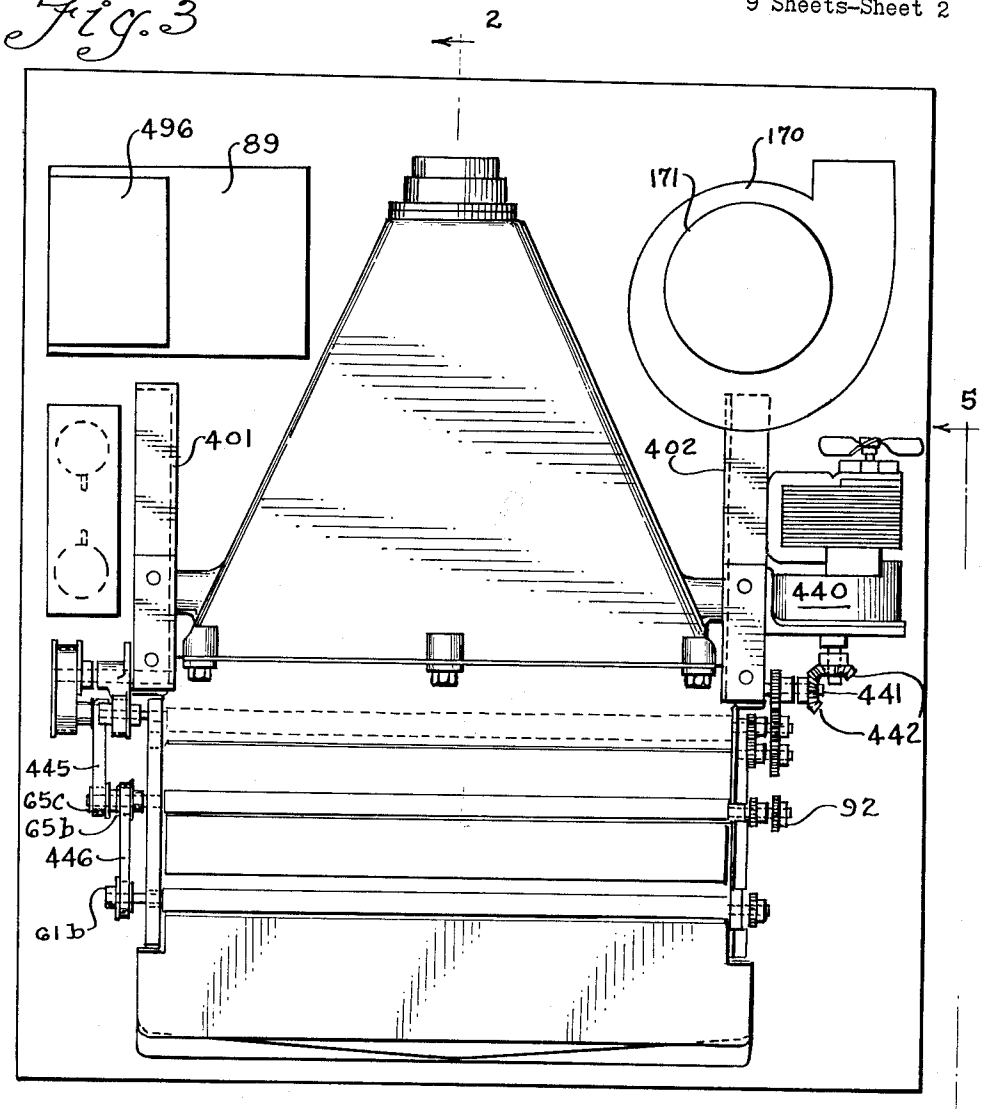

Fig. 13

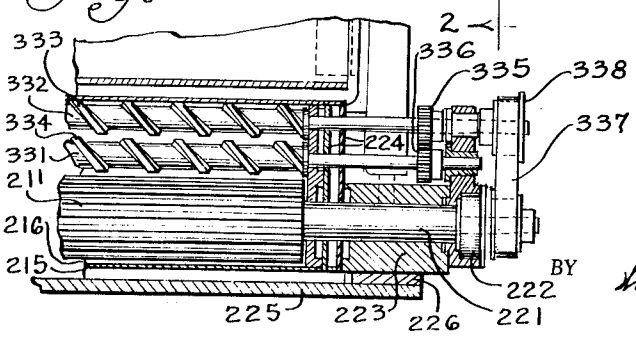

INVENTOR
Meyer L. Sugarman Jr.

BY Hoffe Hubbard Voit & Osann.

ATTORNEYS

May 7, 1963 M. L. SUGARMAN, JR 3,088,386

ELECTROPHOTOGRAPHIC PHOTOCOPY MACHINE

Filed Nov. 16, 1959 9 Sheets-Sheet 3

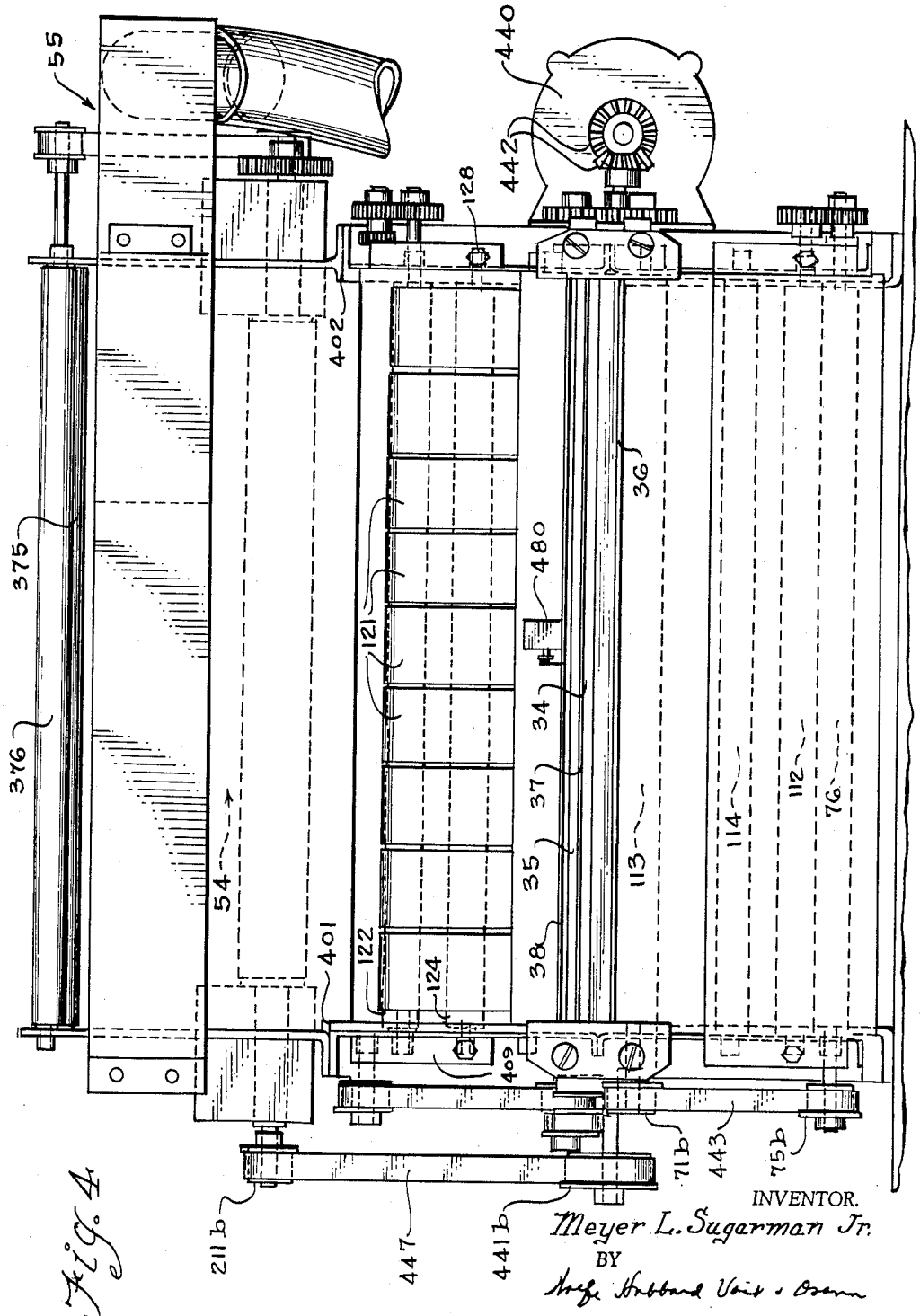

Fig. 4

INVENTOR.
Meyer L. Sugarman Jr.
BY
Hoyt, Hubbard, Voit & Owen

May 7, 1963 M. L. SUGARMAN, JR 3,088,386

ELECTROPHOTOGRAPHIC PHOTOCOPY MACHINE

Filed Nov. 16, 1959 9 Sheets-Sheet 4

Fig. 5

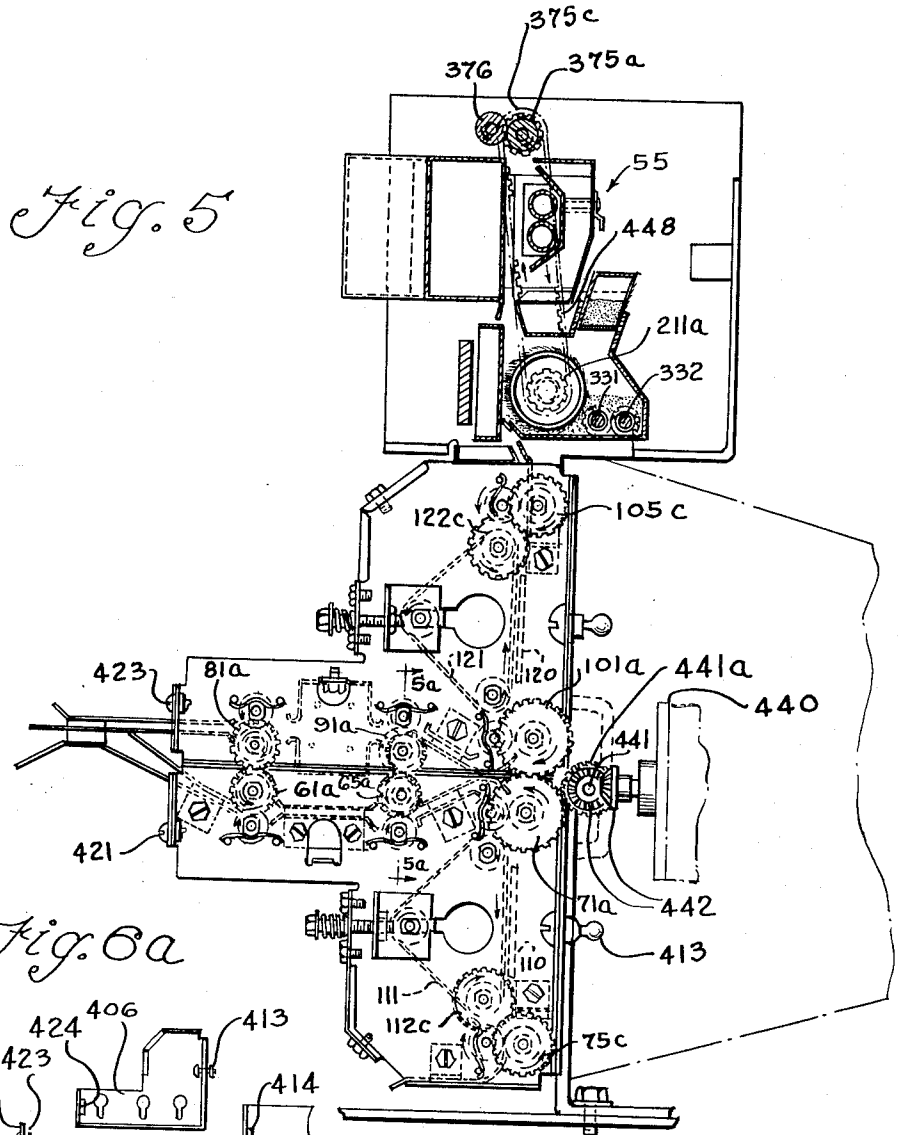

Fig. 6a

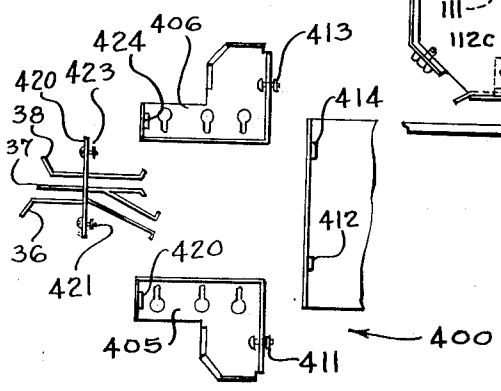

INVENTOR.
Meyer L. Sugarman Jr.
BY
Hoefe Hubbard Voit + Osann

May 7, 1963 M. L. SUGARMAN, JR 3,088,386

ELECTROPHOTOGRAPHIC PHOTOCOPY MACHINE

Filed Nov. 16, 1959 9 Sheets-Sheet 5

Fig. 9

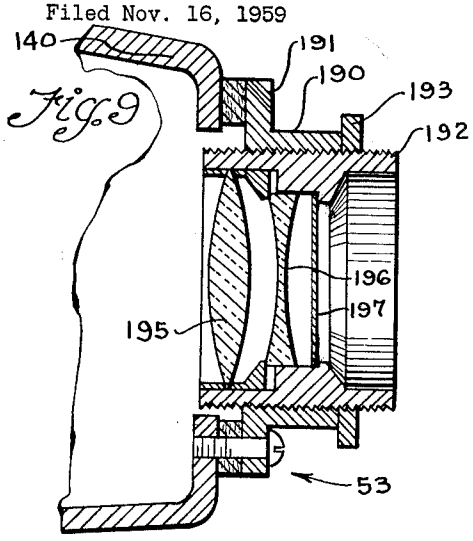

Fig. 5a

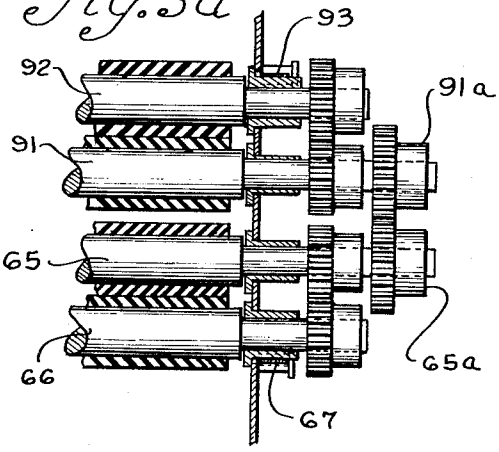

Fig. 10

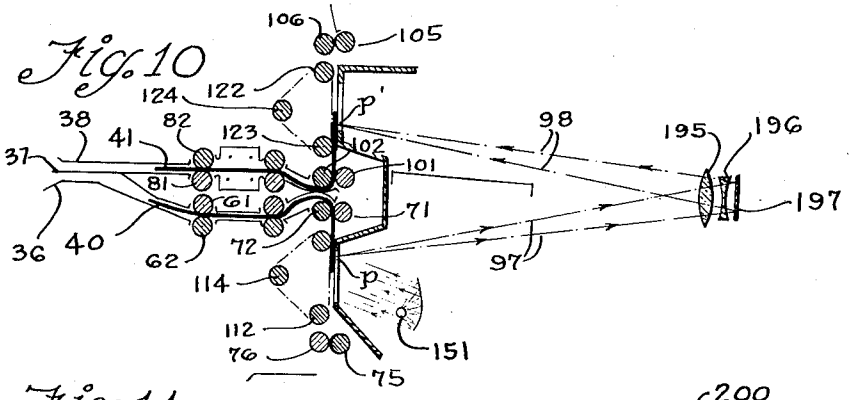

Fig. 11

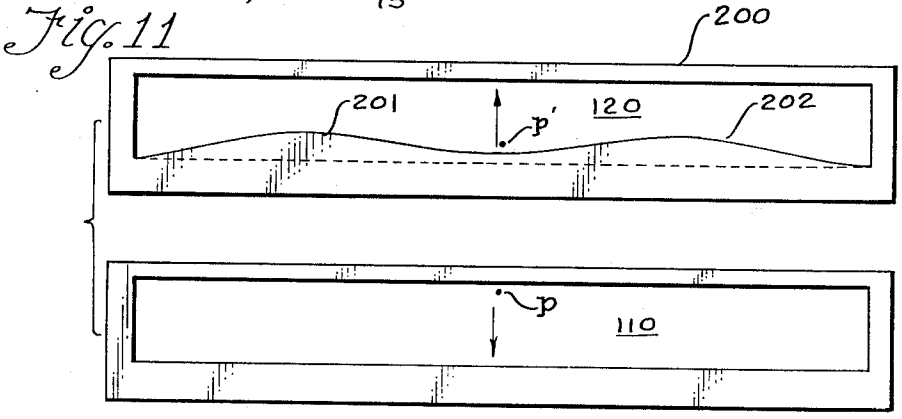

INVENTOR.
Meyer L. Sugarman Jr.
BY
Hoffe Hubbard Voit & Dunn

May 7, 1963 M. L. SUGARMAN, JR 3,088,386

ELECTROPHOTOGRAPHIC PHOTOCOPY MACHINE

Filed Nov. 16, 1959 9 Sheets-Sheet 6

Fig. 12



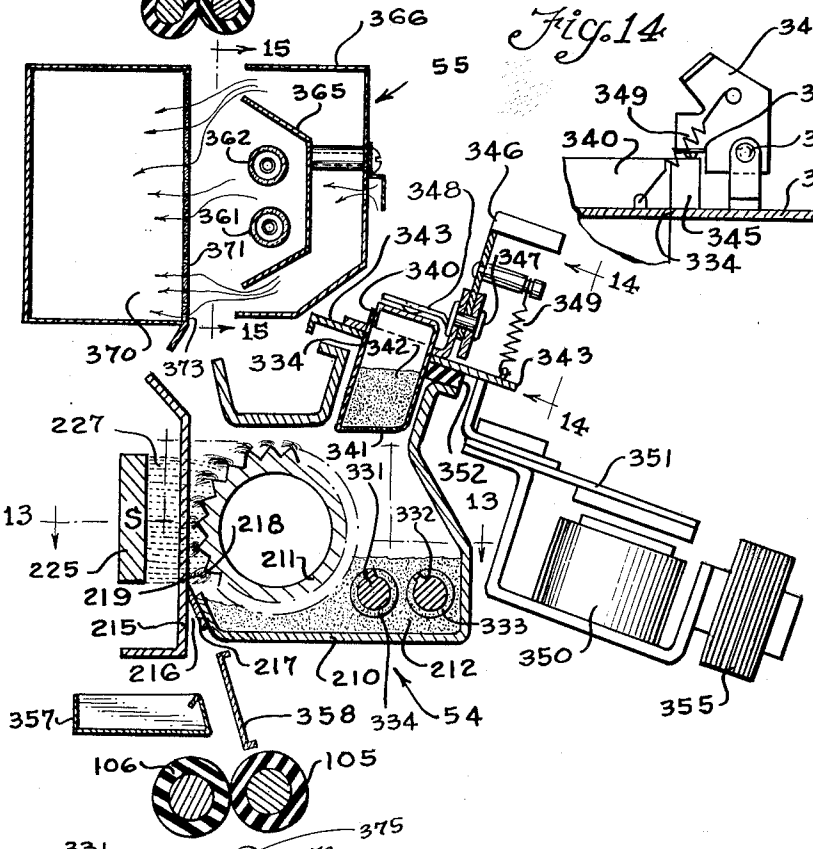

Fig. 14

Fig. 6

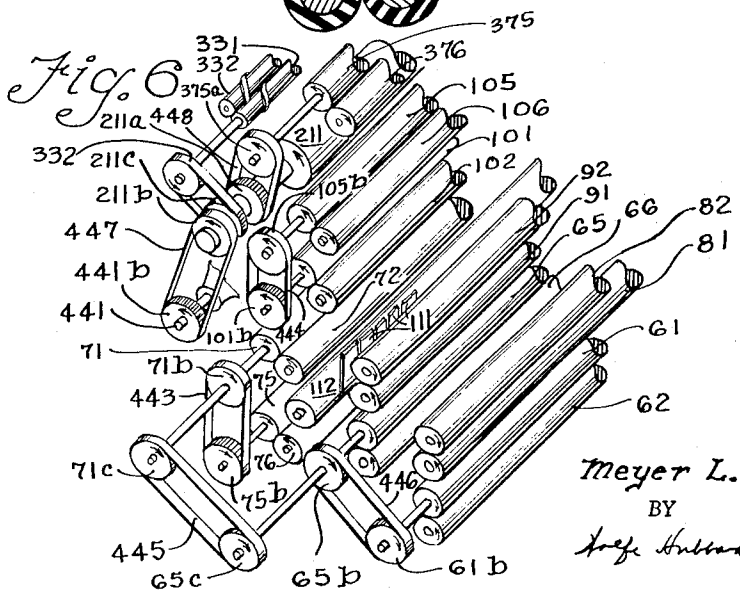

INVENTOR.
Meyer L. Sugarman Jr.
BY
Hoefle Hubbard Voit & Dearn

May 7, 1963 M. L. SUGARMAN, JR 3,088,386

ELECTROPHOTOGRAPHIC PHOTOCOPY MACHINE

Filed Nov. 16, 1959 9 Sheets-Sheet 7

Fig. 7

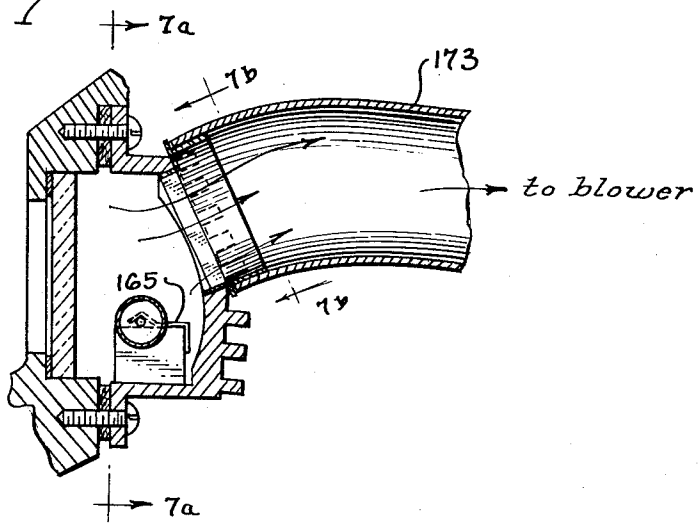

Fig. 7a

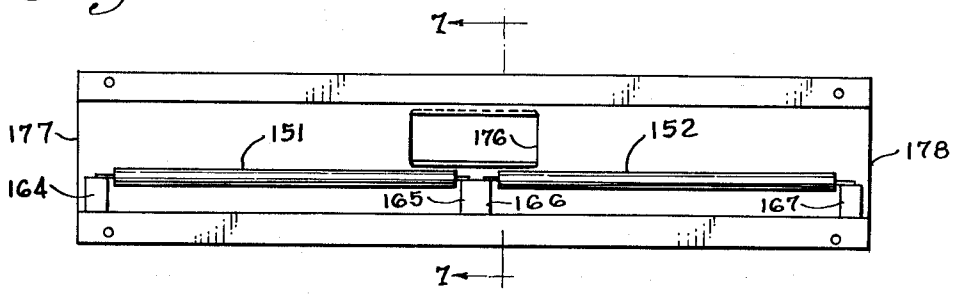

Fig. 8

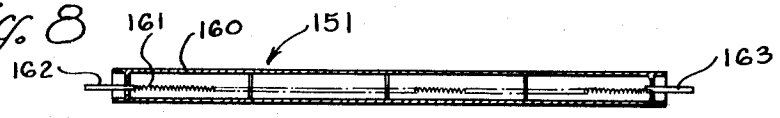

Fig. 7b

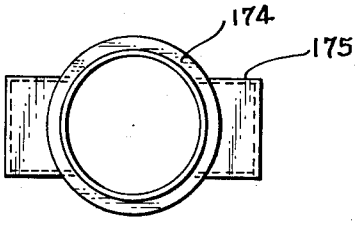

INVENTOR.
Meyer L. Sugarman Jr.
BY
Wolfe Hubbard Voit & Osann

May 7, 1963 M. L. SUGARMAN, JR 3,088,386

ELECTROPHOTOGRAPHIC PHOTOCOPY MACHINE

Filed Nov. 16, 1959 9 Sheets-Sheet 8

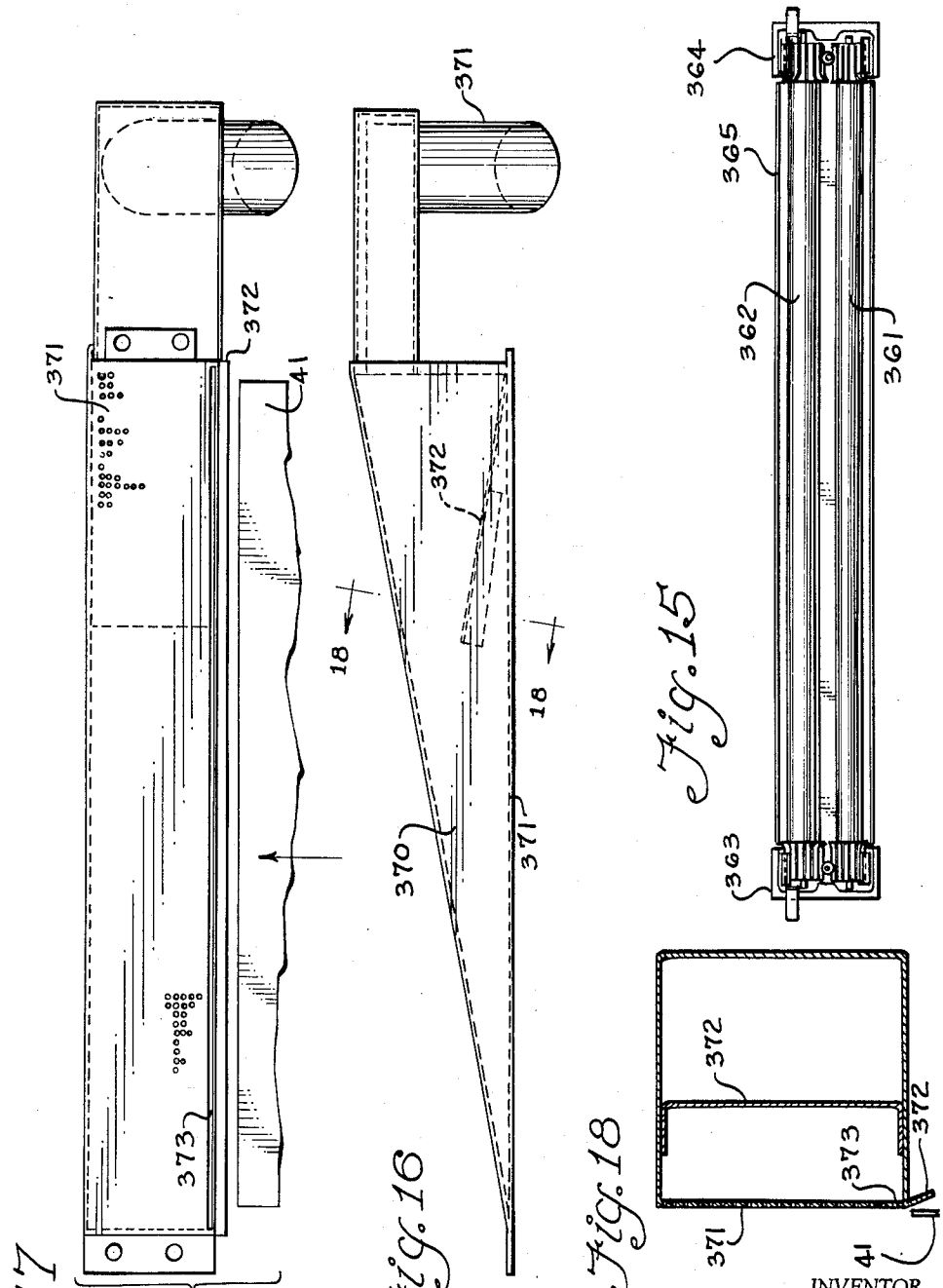

Fig. 17

Fig. 16

Fig. 15

Fig. 18

INVENTOR

Meyer L. Sugarman Jr.

BY Wolfe Hubbard Voit & Osann

ATTORNEY

May 7, 1963 M. L. SUGARMAN, JR 3,088,386

ELECTROPHOTOGRAPHIC PHOTOCOPY MACHINE

Filed Nov. 16, 1959 9 Sheets-Sheet 9

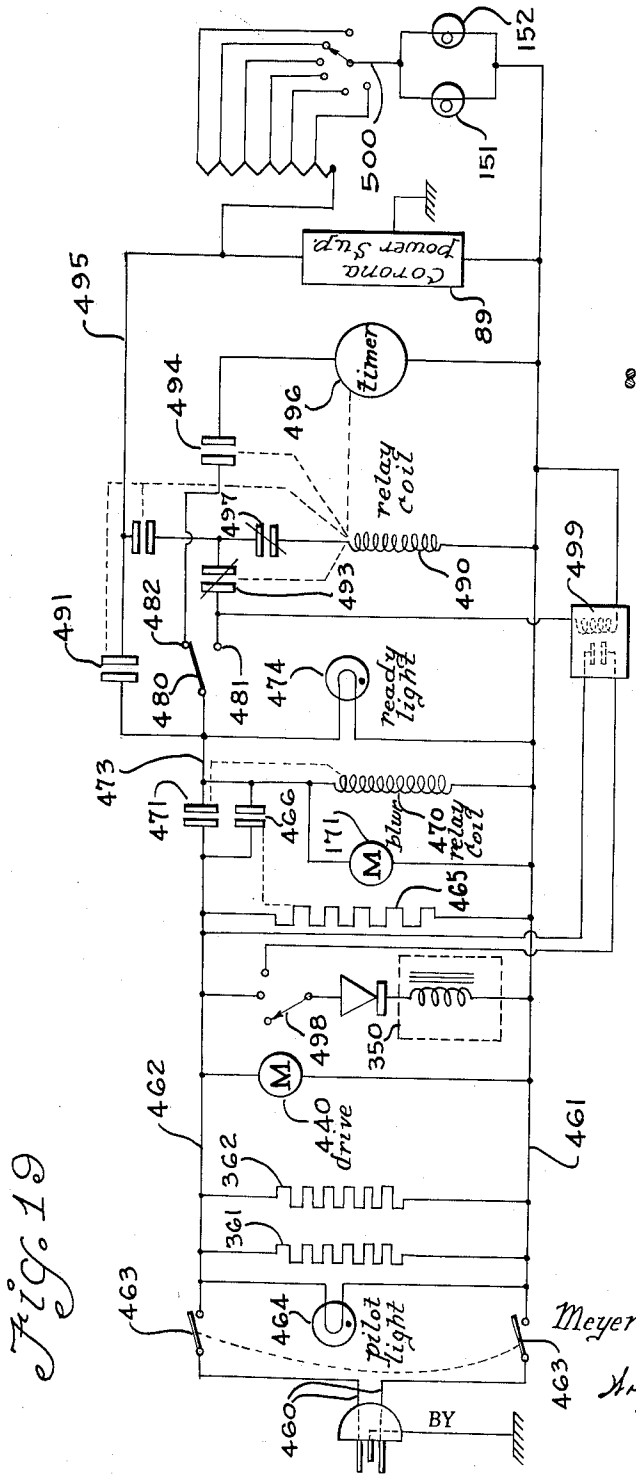

Fig. 19

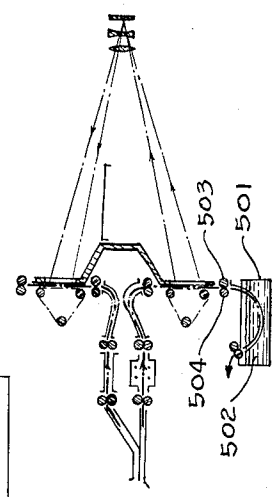

Fig. 20

INVENTOR
Meyer L. Sugarman Jr.

BY Wolfe Hubbard
Voit & Osann

ATTORNEY

United States Patent Office 3,088,386
Patented May 7, 1963

3,088,386
ELECTROPHOTOGRAPHIC PHOTOCOPY MACHINE

Meyer L. Sugarman, Jr., Glencoe, Ill., assignor to American Photocopy Equipment Company, Evanston, Ill., a corporation of Illinois

Filed Nov. 16, 1959, Ser. No. 853,123
18 Claims. (Cl. 95—1.7)

The present invention relates to a photocopy machine and more particularly to a machine of the electrophotographic type intended for office use.

In electrophotographic copying machines employing the so-called "Electrofax" process described by C. J. Young and H. G. Grieg in an article entitled Electrofax—Direct Electrophotographic Printing On Paper in the publication RCA Review dated December 1954, a copy sheet is used having a coating including zinc oxide which is capable of being electrostatically charged and subsequently selectively discharged when struck by the light pattern of the original to form a latent image. The image is developed by applying finely divided toner powder and fixed in place by application of radiant heat. While the process, in theory and principle, is straightforward, nevertheless difficulties have been experienced in the development of apparatus capable of satisfactory commercial use.

Accordingly, it is an object of the present invention to provide an office copying machine of the electrophotographic type which is capable of producing a clean, sharply defined copy of any original having printed or written subject matter on one or both sides. It is a related object to provide an electrophotographic copying machine capable of producing copies with good contrast yet with satisfactory reproduction of continuous tone. It is a still further object related to the foregoing to provide an electrophotographic copying machine in which the background areas are maintained white and clean and in which both the background and printed areas are free of smudges, streaks or other irregularities including streaks extending either longitudinally or from side to side on the sheet.

It is another object to provide a copying machine of the electrophotographic type which is ideally suited for office use and which may be employed to copy any original sheet regardless of the color or nature of the matter to be reproduced and over a wide range of sheet size.

It is a further object of the invention to provide an electrophotographic copying machine which is easy to operate and which requires only the feeding of the original and copy sheet into the machine in convenient face to face relation with subsequent prompt discharge of the original and completed copy in suitable receptacles or the like for convenient removal.

It is still another object to provide a photocopy machine which is rapid, requiring only a few seconds for charging, exposure, development, and fixing. It is nonetheless an object of the invention to provide a copying machine of the electrophotographic type which is portable and compact, occupying about the same space as a typewriter or other desk-type business machine. In the machine to be disclosed the copy sheet is exposed while both the copy sheet and the original are in motion with novel means for transporting both the original and copy sheet at precisely the same speed during the exposure to insure sharpness of image.

In this connection it is an object to provide a photocopy machine in which the copy sheet and the original are transported at constant and equal speed while insuring against transient changes in speed along the path of movement with the accompanying possibility of lines, streaks,

and other discontinuities. It is a related object to provide an electrophotographic copying machine in which the original and copy sheet are fed continuously, thereby making it possible to copy on a continuous basis, either with paired originals and copy sheets sheet-fed in quick succession or with use of copy paper fed from a storage roll.

It is still another object of the present invention to provide an electrophotographic copying machine which overcomes the disadvantages normally associated with the exposure of the copy sheet in motion. It is another object to provide a photocopy machine having novel provision for insuring even exposure and hence constant density across the entire width of the copy sheet.

It is an object of the invention in one of its aspects to provide a machine which is substantially maintenance free, in which there is minimum likelihood of jamming or wadding of the sheets being fed through the machine, but which has novel provision for access either for cleaning or for removal of a wadded sheet in the event that a sheet should, for any reason, become "hung up" in the machine.

It is another object to provide an electrophotographic copying machine having a novel single-folded optical arrangement employing a lens and cooperating reflector symmetrically arranged with respect to illuminating and exposing stations, and permitting the stations to be spaced closely side by side, resulting in close grouping of the driving means and insuring that the original and copy sheet are transported at precisely the same speed. It is a further object to provide a novel optical arrangement having an optical enclosure with adjacent illuminating and exposing stations but in which extraneous illumination is effectively prevented from reaching the exposing station, thereby reducing the likelihood of fogging and insuring maintenance of a clean, white background.

It is a general object to produce an electrophotographic copying machine which is non-critical of adjustment and which is capable of providing a readable copy the "first time" without necessity for "trial and error" and without wastage of copy paper. It is a related object to provide a copying machine which has a high degree of consistency from sheet to sheet and in operation from day to day immune to changes in temperature and humidity.

It is an object of the invention in one of its aspects to provide a novel developing unit which insures that the copy sheet containing the latent image is contacted by toner evenly over the entire width and entire length of the sheet, thereby to produce copies of uniform density regardless of the level of toner in the unit. More specifically, it is an object to provide, in a device as described above, a developer unit having a novel developer roll which is magnetized for cooperation with a mix of toner and iron particles and which is knurled or otherwise patterned to produce upraised portions promoting the formation of individual brush elements which are progressively swept over the area of the copy sheet. It is still another object of the invention to provide a photocopy machine having a developer unit together with novel means for constantly mixing the toner and for constantly equalizing the distribution of the toner across the width of the toner bin, thereby to further insure that all column areas of the copy sheet are acted upon by the toner to an equal degree.

It is a still further object of the invention to provide, in a copying machine of the electrophotographic type, an improved fixing unit for fixing a developed image which employs localized radiant heat adequate for prompt fixing but in which the heat results in no risk either to the copy paper or to the machine itself. More specifically it is an

object to provide a photocopy machine in which the heat is constantly removed by an air stream when no sheet is being processed but in which the air stream is cut off automatically upon entry of a copy sheet into the fixing region. Consequently, it is an object to provide a photocopy machine which is in instant readiness to thermally fix an image but in which there is no possibility of build-up of high temperature during the periods when the machine is running idly. It is a related object to provide a photocopy machine in which vacuum is employed for guiding the paper during the fixing step, thereby to keep the copy sheet safely away from, and at a prescribed distance with respect to, the radiant heaters even though the sheet is curled or deformed along its leading edge portion. Thus, it is a more detailed object to provide an arrangement of the above type in which the application of differential air pressure not only controls the position of the sheet but in which the sheet progressively cuts off the flow of air upon entering the fixing station so that all of the heat radiated or convected from the heaters is effective to act upon the sheet to produce complete fixing within a minimum space of time.

It is, moreover, an object of the invention to provide a photocopy machine in which the copy sheet is passed through a bin or trough of pigmented toner powder but in which any unwanted powder clinging to the back or edge of the sheet is continuously "vacuumed away" for production of uniformly clean copies even after long usage of the machine.

It is one of the objects of the invention to provide a machine having a developing unit in which the dry toner is dusted upon the copy sheet at the top of the machine but which is, nevertheless, of symmetrical construction readily adapted for use inverted, with a developing unit in which the toner is suspended in a liquid vehicle such as Freon.

Other objects and advantages will become apparent upon reading the attached detailed description and upon reference to the drawings in which:

FIGURE 1 is a perspective at reduced scale of the external appearance of a photocopy machine constructed in accordance with the present invention.

FIG. 1*a* is a diagram showing the feeding of an original and copy sheet into the machine of FIG. 1.

FIG. 2 is a vertical section taken along the central longitudinal axis of the machine.

FIG. 3 is a top view of the machine with the upper structure removed and taken along the line **3—3** in FIG. 2.

FIG. 4 is a front view of the machine of FIG. 2 omitting the upper structure and with the upper shield plate removed to reveal the belts which drive the copy sheet.

FIG. 5 is an elevation showing the driving mechanism at the "near" side of the machine but with certain elements in the upper structure in cross section.

FIG. 5*a* is a fragmentary section taken through the driving gears along the line **5*a*—5*a*** in FIG. 5.

FIG. 6 is a diagrammatic perspective of the driving belt arrangement at the "far side" of the machine.

FIG. 6*a* is a diagram at reduced scale showing the subframes comprising the apparatus in exploded position.

FIG. 7 is a transverse fragmentary section taken through the lamp housing along the line **7—7** in FIG. 7*a*.

FIG. 7*a* is a face view of the lamp housing taken along the line **7*a*—7*a*** in FIG. 7.

FIG. 7*b* shows the coupling between the vacuum line and the lamp housing as viewed along the line **7*b*—7*b*** in FIG. 7.

FIG. 8 is a detail of a lamp employed in the housing of FIG. 7.

FIG. 9 is a fragmentary section taken through the lens and mirror reflector unit.

FIG. 10 is a schematic diagram showing the optical path relating a moving point on the original with a corresponding moving point on the copy sheet.

FIG. 11 shows the illuminating station and the mask at the exposing station looking along the line **11—11** in FIG. 2.

FIG. 12 is a vertical section through the developing and fixing stations.

FIG. 13 is a transverse fragmentary section taken along the line **13—13** in FIG. 12 showing the mounting of the developing roller and the augers associated therewith.

FIG. 14 is a detail of the hold down mechanism taken along the line **14—14** in FIG. 12.

FIG. 15 is a face view of the fixing lamps taken along the line **15—15** in FIG. 12.

FIG. 16 is a fragmentary view showing the plenum chamber as viewed from the top.

FIG. 17 is a face view of the plenum chamber shown in FIG. 16.

FIG. 18 is a section taken along the line **18** in FIG. 16 showing the plenum baffle construction.

FIG. 19 is a schematic diagram of the control circuit for the photocopy machine.

FIG. 20 is a diagram showing the above machine inverted for use with a developer having a liquid vehicle.

While the invention has been described in connection with a preferred embodiment it will be understood that I do not intend to be limited to such embodiment but intend to cover the various modifications and alternative constructions falling within the spirit and scope of the appended claims.

Turning now to FIG. 1 of the drawings there is shown in perspective a machine constructed in accordance with the present invention. The frame of the machine generally indicated at **30** is mounted upon a base **31** and the entire device is enclosed in a generally rectangular, styled housing **32** having air vents **33**. Mounted at the front of the housing **32** are inlet slots or entryways **34**, **35** for feeding in the original and copy sheet respectively defined by a lower lip **36**, a sheet separator **37** and an upper lip **38**. In the operation of the machine, the original indicated at **40** (FIG. 1*a*) and the copy sheet **41** are fed into the machine face to face, held together by the fingers. The two sheets are positioned with the leading edge of the original "showing" by a slight amount, thereby to facilitate entry of the separator plate (FIG. 1*a*) between the two sheets for subsequent travel of the sheets along their respective paths. While the preferred form of device employs the separator plate, it will be understood that the invention is not limited thereto but includes arrangements in which means are internally provided for defining completely separate paths for the two sheets. Consequently the term "entryway means" may be used to describe in general terms the means for feeding sheets for utilization within the machine. For discharging the completed copy an outlet **42** is provided at the top of the housing, and for return of the original there is a tray receptacle **43** along the lower edge of the housing.

In practical office use, all that is necessary is to feed the sheets in as shown in FIG. 1*a* and to accept the resulting copy turned out a few seconds later, the copy being in dry, permanent form ready for instant use. Paired sheets may be fed in rapid order or, in some instances, it may be desired to feed the copy sheet from a suitable supply roll outside of the machine, with suitable means being provided for re-rolling or severing at the point of exit, a matter well within the skill of the art. As will become clear as this discussion proceeds, the operation is fully electrical and fully automatic, employing power derived from the regular commercial supply line without necessity for using chemical solutions, and with the only consumable material being finely divided, pigmented toner which need be replenished only at rare intervals by manual or automatic means. However, it is one of the aspects of the present invention that the mechanism which will be described in some detail is not necessarily limited to use with dry powder developers but may, with only

minor modification, be adapted for use with electroscopic particles suspended in Freon or other inert liquid vehicle.

With either type of development, electrophotographic paper made in accordance with the procedure set forth in Sugarman and Steiner U.S. Letters Patent 3,051,569 to which cross reference is made, may be employed. Briefly stated, the copy sheet includes a paper backing having a sensitive coating in the form of zinc oxide plus a binder and a novel combination of sensitizing dies to produce panchromatic response. Alternatively, any other suitable electrophotographic sheet material may be used.

In the disclosure which follows it is desirable, for easy understanding, to discuss the component parts in accordance with certain groupings or sub-combinations. For example, the sheet driving arrangement, the charging unit, the optical unit, as well as the developing and fixing units, will be separately referred to. However, it will be understood that this is done for convenience only and that the invention in certain of its aspects resides in a novel combination and coordination of the various sub-assemblies in a manner not to be found in the prior art. Such cooperaton and coordination substantially contribute to the overall result, forming a basis for the combination claims appended to the specification.

In accordance with the present invention, means are provided for feeding the original and the copy sheet into the machine at a common entry position, with the copy sheet being electrostatically charged, and with the sheets being divergently transported past optically related illuminating stations and exposing stations in synchronism with one another so that the image of the original is cast upon the copy sheet to produce a latent image which is subsequently developed and fixed in place. In the present instance the illuminating station and exposing station, indicated generally at **50**, **51** are spaced edge to edge in a common plane with a reflector unit **53** symmetrically arranged with respect to the two stations for reflecting the image from one to the other. Following transport of the copy sheet from the exposing station, it is developed in a developer unit **54** and fixed in a fixer unit **55** prior to discharge from the machine.

For the purpose of transporting the original **40** through the exposing station **50**, the original is diverted downwardly through a passage **60** into engagement with nipping transport rollers **61**, **62**. The specific means for rotating the rollers **61**, **62** and the other rollers shortly to be referred to, in synchronism, will be discussed at a later point. The rollers **61**, **62** are covered with rubber or other resilient non-slip material, and the roller **62** is biased toward the roller **61** by mounting it for floating movement and by engaging it with a biasing spring **63**. The same mounting means is employed at each end. When the original leaves the rollers **61**, **62**, it is passed through a pair of guide plates **64**. As the original leaves the guide plates **64** it is engaged by a similar set of rollers **65**, **66**, the latter having a biasing spring **67** and operated at the same peripheral speed as the preceding rollers. As the original continues in its path of movement it encounters a further pair of guide plates **68** which define a curved path and which serve to divert the original through a substantial angle on the order of 90° for movement past the exposing station **50**. Upon leaving the guide plates **68**, the original is engaged by a pair of horizontally alined rubbed rollers **71**, **72** with the latter having a biasing spring **73**. The original, after passing the station **50**, is engaged at the lower end of the path of travel by a pair of rollers **75**, **76** which are biased together by a spring **77**. Finally, after the original leaves the rollers **75**, **76** it engages a curved deflector plate **78** which deflects the original back in the direction of the operator through the exit slot **43** previously referred to. During the path of movement of the original through the illuminating station, the original is acted upon by a high intensity light source **80**, the details of which will be set forth at a later point.

Turning attention next to the copy sheet **41** fed through the slot **35**, this sheet is engaged by a first pair of rubber covered rollers **81**, **82** biased together by a spring **83**. Upon leaving the rollers the paper is guided through a charging unit **84** including a first set of wires **85** and a second set of wires **86** which are arranged transversely with respect to the direction of movement of the copy paper and spaced a short distance on each side of it. The charging wires **85**, **86** are shielded by enclosing shields **87**, **88**, respectively, which extend substantially the length of the wires. It will be understood that the wires are mounted on suitable insulators and connected to a source **89** of negative and positive charging voltage (see also FIG. 3) to set up a corona discharge. Preferably, with zinc oxide coated papers, the polarity is such that an all-over negative charge is applied to the face of the copy sheet. In a typical machine the wires **85** may have a potential of about six thousand volts negative with respect to ground, while the wires **86** have a positive charge of about four thousand volts (for 0.003" tungsten wire). The thin wires are protected by stringing nylon thread diagonally across the edge of the shields **87**, **88**. The charging unit **84** operates as follows: Corona discharge from the negatively charged wires **85** results in the formation of negative ions. These ions are attracted toward the positively charged wires **86**. As a cloud of such ions moves toward the positively charged wires they strike the surface of the copy sheet **41**, and the negative charge is imparted with a high degree of uniformity to the treated surface of the sheet.

Upon leaving the charging unit, the paper is engaged by rubber covered rollers **91**, **92** having a biasing spring **93**. The sheet next engages deflector plates **98** which deflect the copy paper upwardly through an angle of approximately 90°. Upon leaving the deflector plates, the copy sheet is engaged by horizontally alined rollers **101**, **102** having a biasing spring **103**, for transport through the exposing station **51**. Beyond the exposing station the sheet is engaged by a pair of rollers **105**, **106** having a biasing spring **107** for subsequent movement into the developing and fixing units **54**, **55**.

It will be apparent from what has been stated that the original and copy sheet are fed in together but are separated to follow generally parallel paths, with the copy sheet being electrostatically charged and with both the sheets being thereafter diverted for travel in opposite directions past adjacently located illuminating and exposing areas precisely synchronized in speed. The specific means for driving the rollers mentioned above at the same peripheral speed and for simultaneously driving the other rotating elements in the system will be discussed at a later point.

In accordance with one of the aspects of the invention the illuminating and exposing stations **50**, **51** are in the form of transparent windows, of glass or the like, of narrow rectangular shape extending the width of the sheets and means are provided for backing up the respective sheets and for holding them flatly against the windows. Thus in the case of the original, the glass window indicated at **110** cooperates with a moving belt **111** in the form of an endless loop having a vertical run parallel to and closely adjacent the window **110**, defined by a lower roller **112** and an upper roller **113**. The lower roller **112** is driven by means to be described so that the belt speed is substantially equal to the speed of the paper. Preferably the belt **111** is formed of small bands of fabric, for example nine in number, arranged edge to edge substantially the entire width of the window. To insure that the belt **111** is maintained taut, a takeup roller **114** is provided journaled in a slide **115** which is mounted for movement in a horizontal slot **116**. Tension is maintained by a spring **117** surrounding an adjustable screw **118** which engages the slide. Such supporting structure is duplicated at the opposite end of the takeup roller **114**.

Provided that adequate tension is maintained in the belt **111** with rather small clearance between the belt and the window **110**, the belt performs a supporting function, holding the original against the window in precise focus in the illuminating plane. It is to be noted, however, that no reliance is placed upon the belt to actually transport the paper along the path of movement, positive transport being taken care of by the upper set of rollers **71, 72** and the lower set of rollers **75, 76**. Thus any minor changes in velocity which might take place along the run of the belt due to stretching of the sections or for any other reason cannot affect the velocity of the original. I prefer to employ fabric for the belt **111** without any coating of rubber or other adherent material so that slight localized slippage may take place between the belt and the original whenever the belt departs from the speed of the original imparted to the latter by the rubber covered rollers.

While the fabric belts are advantageous, it will be recognized by one skilled in the art that the holding function may, if desired, be performed by substituting for the belts a polished, spring pressed, lockup plate to press against the back of the sheet over the entire window area.

Referring to the corresponding means for guiding and supporting the copy sheet in contact with the window at the exposing station **51**, it will be noted in the drawings that a perfectly symmetrical arrangement is employed. Thus the window **120** at the exposing station cooperates with a belt **121** having a drive roller **122** and a cooperating roller **123** arranged below it. Takeup is provided by a third roller **124** mounted on a slide **125** riding in a slot **126** and tensioned by a spring **127** on an adjustable screw **128**. As in the case of belt **111**, the belt **121** is in the form of individual sections or bands arranged side by side (see FIG. 4).

The glass windows employed in the present embodiment may, if desired, be placed by diagonally arranged wires or strings strung in spaced relation in the plane of the window so as to guide the face of the sheet without interfering with its passage. Since the sheet moves constantly, every increment is exposed to the same degree, so that such wires or strings cause no discontinuities in the image.

In accordance with one of the important aspects of the present invention, the windows **110, 120** located at the illuminating and exposing station respectively are formed in the wall of an optical housing, and a reflector unit including a lens and mirror is provided opposite the two stations and symmetrically arranged with respect to them. Thus in the present instance the two stations are located in the "near" wall of an optical housing **140** while the lens and mirror unit, indicated at **53**, is mounted at the opposite wall. Referring in greater detail to the optical housing, it is of generally pyramidal or "conical" shape, with the windows **110, 120** being located in edge to edge arrangement at the base of the pyramid and with the lens-reflector unit **53** being located at the "apex." For convenience of access, the optical housing **140** is formed in two sections, a base portion **141** and a body portion **142**, defining a flanged joint **143** which is held together by machine screws **144**. Extending transversely within the body portion **142** is a light shield **145** which serves to separate the enclosure into two compartments, thereby to insure that the only light received at the exposing station is that which passes along the optical path. The baffle is preferably highly light absorbing, for example, of honeycomb construction, and both the baffle and the interior of the enclosure **140** are painted dead black in order to reduce unwanted scattering of light within the enclosure.

In accordance with one of the detailed, but important, aspects of the invention, the central portion of the base **141** of the enclosure is offset inwardly as indicated at **146** to provide a transversely extending recess **147** for accommodation of the rollers **71, 101** which engage the original and copy sheet respectively. In this way both original and copy sheet may be positively transported in opposite directions along a common plane without any interference from housing structure.

Prior to more detailed discussion of the projection optics, reference may be made to the source of illumination **80** shown in FIGS. 7 and 7*a*. In carrying out the present invention, an elongated light source is provided which is located laterally at one side of the optical image projection path and running the width of the exposing window **110**, with an elongated light reflector for illumination over the entire width of the window. In the present device the light source **80** has a housing **150** and a pair of high intensity lamps **151, 152** arranged end to end. The housing has flanges **153** for mounting the same on the enclosure **140** over an opening **154** formed in the lower wall of the enclosure. Arranged behind the lamps **151, 152** is a curved reflector surface **155** which is highly polished and the outer surface of the lamp housing may have integral fins **156** to increase the heat dissipating area. In order to understand the construction of the lamps, reference is made to FIG. 8 which shows the lamp **151** taken as representative. Here it will be noted that the lamp includes a cylindrical envelope **160** of heat resistant glass having a coiled filament **161** axially suspended therein. Electrical connection is brought out to axially extending terminals **162, 163** at the ends of the lamp. When the lamp is in position these terminals are supported in terminal blocks **164, 165** respectively. Corresponding terminal blocks **166, 167** are provided for the lamp **152**.

For the purpose of cooling the lamp housing and for preventing the heat generated by the lamps from building up in the enclosure **140**, the lamp housing is sealed off with respect to the optical enclosure by a transparent window, and differential pressure means are provided for continuous withdrawal of the air from the interior of the lamp housing. Specifically, for creation of a vacuum an evacuating blower **170** is provided (FIG. 3) having a motor **171** and an inlet duct **173**. To communicate with the duct **173** a fitting **174** is used (FIG. 7*b*) having a rectangular end portion **175** which fits into an opening **176** centrally formed in the back wall of the lamp housing. Air is admitted through the ends of the lamp housing as indicated at **177, 178**. It will be apparent, then, that as long as a vacuum is applied, a continuous stream of air will pass endwise through the lamp housing from both its ends, thus maintaining the lamps at a low temperature and preventing any build up of heat within the optical enclosure even when the device is operated for many hours at a time.

In accordance with one of the aspects of the invention a compound lens-reflector is employed in which the lens elements act upon the image twice along the path of image reflection, i.e., upon approaching and leaving the mirror. As shown in FIGS. 9 and 10, the optical reflector unit **53** includes a mounting **190** having a flange **191** for securing the same to the end of the housing **140**. Inside of the mounting **190** is a lens barrel **192** which is screwed into the mounting and which is held in adjusted position by a lock nut **193**. Alined within the barrel **192** are a first lens element **195**, a second lens element **196** and a front surface mirror **197**. The elements are sealed so that only one optical surface is presented to the atmosphere namely the front surface of the first lens element. The focal length of the lens combination is so chosen that the image of the original is sharply focused in the exposing plane immediately behind the window **120**. Thus taking the point *p* by way of example, the light therefrom travels along the optical path indicated at **197** and is reflected along the path **198** to produce a corresponding point of light *p'* on the copy sheet. And as the point *p* on the moving original moves downwardly, the point *p'* moves upwardly in exact synchronism with the movement of the copy sheet, thus the exposure time

is the time that it takes the original and copy sheet to move across their respective windows.

In addition to producing compact folded optics enabling both the original and copy sheet to be fed into the machine together and exposed with only a small separation between them, there are a number of advantages in the lens-mirror system shown in the drawings. Since the light waves forming the image pass through the lens both forwardly and reversely, aberrations usually present in optical lenses tend to be self-cancelling so that a high degree of optical resolution is provided using only inexpensive lens elements. In practice only two lens elements are required whereas in the usual "straight through" optical system a total of four lens elements would be required in order to provide equal performance. Moreover, it can be shown that by employing the same lens elements in the folded optical arrangement the optical aperture for a given focal length is effectively doubled, which means that the arrangement is particularly efficient as a light-transmitter. Thus a lens-mirror combination may be employed having only limited diameter. This results in further economies since the cost of optics is disproportionately related to the diametrical size thereof. The addition of the mirror **197**, which is of the front-surfaced type, adds very little to the cost of the unit and, since the space adjacent the reflecting surface may be hermetically sealed, no special precautions need be taken to protect the reflecting surface.

In accordance with the present invention, novel means are provided for equalizing the exposure across the entire width of the copy sheet at the exposing station to produce constant density in the later-developed image. Equalization of the incident light is brought about primarily in the present machine by employing two light sources which are spaced end to end across the width of the illuminating station, thereby eliminating concentration of light at the center of the illuminating station. Thus, it will be noted in FIG. 7*a*, two lamps **151**, **152**, each having a filament length of about four inches, are spaced apart at the center a distance of about four inches. Such an arrangement is efficient from a light utilization standpoint since none of the light need be "thrown away" by severe masking at the central portion of the light path. Assuming a sheet speed of about one inch per second, adequate illumination is secured with minimum wattage, about 800 watts in a practical case. Further in accordance with the invention, and to further equalize the illumination falling upon the exposing station, the exposing station is provided with a shallow contoured mask **200** as indicated in FIG. 11. The edge of the mask has a shallow first hump **201** and second hump **202**. The effect is to take care of slight excess illumination at about the one-quarter and three-quarter points along the width of the station to provide a somewhat shorter exposure at the corresponding column positions on the copy sheet. This use of two relatively short lamps also simplifies the construction of suitable light sources.

While the operation of the reflective optics will be apparent to one skilled in the art from the preceding discussion, nevertheless reference may be made to the diagram shown in FIG. 10 which traces the path of the original **40** and the copy sheet **41** as they are fed together into the machine. Transported at synchronized speed by the rollers, the two sheets advance along the indicated paths, and the image of each point *p* on the original will fall upon a corresponding point *p'* on the copy sheet, the point *p* travelling downwardly and the point *p'* upwardly, so that exposure takes place over a time interval at each point and on the copy sheet in accordance with the amount of reflected light reaching such point. The result is that the image is stationary with respect to the copy sheet and, provided the synchronization is exact, a sharp latent image is produced on the copy sheet. Dissipation of the electrical charge from the surface of the charged sheet is in proportion to the degree of exposure. Thus fully exposed or "white" areas will have the charge substantially dissipated therefrom so that no developer powder is picked up in the subsequent development, whereas areas which correspond to black areas in the original, and on which no light falls, will retain full electrical charge and pick up a maximum amount of the developing powder during the subsequent development.

While the singly-folded optical system constitutes the preferred form of the invention, it will be understood that the invention in its broader aspects is not limited thereto and would include arrangements in which the optics have multiple folds and also arrangements where the light is transmitted from a point in the illuminating station to a corresponding point in the exposing station via a filamentary conductor of Lucite or the like, employing a bundle of such filamentary conductors to provide the necessary resolution of detail. To provide illumination, every other fiber in the bundle facing the original, or at least a portion thereof, instead of passing to a corresponding point on the copy sheet, is brought out instead to a source of illumination.

Also, while I prefer to make an exposure with the original and copy sheet in motion synchronized with one another, it is possible to utilize the invention in some of its aspects by momentarily stopping the drive motor and exposing in the stopped condition using any suitable light source.

As the copy sheet including the latent image moves upwardly through the feed rollers **105**, **106**, it passes into a developer unit generally indicated at **54** for application of toner to the charged areas. In order to understand the construction and operation of the developing unit, reference is made to FIGS. 12–14. Here it will be noted that the developer unit includes a bin **210** having a magnetic roller **211** rotating in a mixture of toner and iron particles **212**. The toner particles are carried on the iron particles, leaving the iron particles upon attraction by the charged areas of the copy sheet in accordance with the well known triboelectric effect. The iron may be replaced by other magnetic carriers, such as magnetic iron oxide or nickel. Alternately, the toner particles themselves may be magnetic containing magnetite iron, nickel or other finely divided magnetic substances in their individual particle masses. In such case, the carrier is not needed and the particles attain a charge opposite to that of the image areas by induction from the image areas themselves.

At the left hand side of the bin is a barrier **215** defining a slot or entryway **216** for admission of the copy sheet. The entryway **216** is normally sealed by a flap of fabric **217** or other flexible material. When a sheet is fed into the entryway **216** by feed rollers **105**, **106**, the leading edge pushes aside the flap **216** an amount which is just sufficient to admit the sheet flatly positioned against the barrier, and the copy sheet is progressively fed through the bin picking up toner powder on the charged areas of the face. Any powder which may tend to stick to the back of the sheet is removed by vacuum means to be described.

In accordance with one of the detailed aspects of the invention, the roller **211** is fluted to produce a series of sharp longitudinal ridges covering its entire surface and so magnetized so that each of the ridges acquires a brush-like tuft of the toner and iron mixture. Thus in FIG. 12 a typical one of the longitudinal ridges is indicated at **218** having a longitudinal brush **219** which runs the length of the roller. The pattern on the roller may be any other sharp-edged design, such as a diamond or square knurl. While sharp ridges are preferred to order to produce substantial concentration of magnetic flux, it will be understood by one skilled in the art that the ridges may be flat-topped if desired without departing from the invention and without sacrificing the main operating advantages.

In order to understand the means for mounting and

magnetizing the roller **211**, reference is made to FIG. 13. Here it will be noted that the roller is provided with a trunnion or axle **221** supported by a ball bearing or other anti-friction bearing **222** in a pillow block **223**. Seals **224** are spaced along the shaft **221** in order to prevent the toner-iron mix from working its way along the shaft into the bearing. For providing an opposite magnetic pole, a bar **225** of highly permeable magnetic material is provided. A permanent magnet **226** is interposed between the end of the bar **225** and the base of the pillow block **223**. Since the pillow block and shaft are both of magnetic material, a high degree of magnetic coupling is achieved, and parallel lines of flux, indicated at **227** are set up between the bar and the roller. The barrier **215** is preferably made of aluminum or other non-magnetic material so that it does not affect the lines of flux in the setting up of the longitudinal brushes on the periphery of the roller.

In accordance with one of the aspects of the present invention, distributor means are provided for constantly mixing and equalizing the amount of toner-iron mix at each point along the width of the developer unit. More specifically, novel means are provided for constantly transporting the mix along the axial width of the developer unit. This is accomplished in the present instance by providing in the developer bin a pair of augers arranged adjacent the roller **211** and having flights which urge the mix in opposite directions. Thus as shown in FIG. 13 the two augers **331**, **332** are provided having flights **333**, **334**. The two augers are preferably identical to one another, and transmission of the mix in opposite directions is accomplished by rotating the augers oppositely with respect to one another. Thus, the augers are provided with simple meshing spur gears **335**, **336**, with a belt **337** engaging a pulley **338** for feeding driving torque to the pair.

The mixing and distributing arrangement illustrated in the drawings is advantageous since it enables uniform development of the copy paper independently of the rate at which the toner may be consumed in any position along the axial width of the roller and also independently of the replenishment of toner. It may happen, for example, that copies are run having a black stripe in a given column position. Ordinarily this would deplete the toner in such column position so that subsequent copies would lack density in this region. Similarly, the running of a succession of narrow copies tends to deplete the toner at the center of the machine. However, with the level of the powder being continuously equalized as described, such depletion is avoided. Moreover, the arrangement makes it possible to feed replenishing amounts of toner in relatively large quantities at a particular location, for example, at one of the ends of the toner bin or at the center with the assurance that the toner will be distributing on the surface of the magnetic particles and with any temporary excess being immediately dispersed throughout the width of the bin. As a result, an unlimited succession of constant density copies may be obtained.

For the purpose of replenishing the toner, a reservoir is provided above the bin. Referring to FIG. 12, the reservoir is in the form of an elongated tank or container **340** having a series of holes **341** for dispensing a supply of toner **342** contained therein. For mounting the container **340**, the same is preferably fitted into a mounting plate **343** having a rectangular opening **344** therein, and the container, at its ends, includes ears **345** (see FIG. 14) for purposes of support. To maintain the container **340** in the illustrated seated position, a clamp **346** is provided which is pivoted at **347** and which has a hold-down **348**. The latter is biased against the container by a biasing spring **349**. A similar hold-down arrangement is provided at the other end of the container, and it will be apparent that it is a simple matter to substitute a fresh container of toner when the original one becomes exhausted. To vibrate the container **340** so that toner is sifted through the opening **341**, an electromagnet or buzzer **350** is provided having a vibratory armature **351** which is connected to the supporting plate **343**. The supporting plate is mounted upon a block of rubber **352** or other resilient material to provide a hinge for semifree oscillation of the supporting plate.

For the purpose of sharpening the wave form applied to the coil of the vibrator, thereby to increase the amplitude of the vibration, a half wave rectifier **355** is used in series with the regular A.-C. line. In operation, then, application of rectified current to the vibrator at intervals, whenever replenishment of the toner is required, causes vibration of the armature and shaking of the container **340** so that toner is sifted through the openings **341** down into the toner bin. The constant agitation provided by the flights **331**, **332** insures that the fresh toner will be intimately mixed with the iron particles to produce a homogeneous mixture. It will be appreciated that the invention in its broader aspects is not limited to the use of vibration for discharging powder but would include discharge by pneumatic means. Thus the container **340** may be made of flexible plastic such as polyethylene with means being provided for applying a "squeeze" to at least one wall thereof for forcing a small quantity of powder through the holes similar to a plastic "squeeze bottle."

While the developing unit described above produces a crisp copy substantially free of unwanted "background," the background may be further reduced by employing the teachings of my copending application Serial No. 799,305 filed March 13, 1959, now Patent No. 3,058,444, to which reference is made.

In order to prevent escape of even a small amount of the toner mix from the toner bin as the trailing edge of the copy sheet passes the flap **217**, and in order to prevent any mixture thus released from falling down onto the transport rollers **105**, **106**, the developer unit is offset forwardly with respect to the rollers, and a tray, extending the width of the entryway **216**, is arranged under the entryway and vertically alined with the flap **217** so as to catch the toner which may escape. Such tray is indicated at **357** in FIG. 12. Because of the offset a deflector **358** in the form of a plate of metal is positioned above the rollers **105**, **106** and forwardly inclined so that the copy sheet is positively guided into the entryway **216**. It is to be noted that the entry angle thus created forces the back of the copy sheet firmly against the backing plate of the developer unit, and insures that no toner-carrier mixture will be trapped behind the copy sheet thus maintaining cleanliness of the back of the copy sheets.

The developed copy sheet emerging from the copy unit **54** requires "fixing" in order to hold the toner powder in place, thereby to produce a permanent, non-smearing copy. In the present embodiment heat is used for this, and either the toner powder or the copy paper may have as a component a thermoplastic resinous material which melts or softens under the action of heat to provide the necessary adhesion. As a novel sub-combination of the present photocopy machine, a fixing unit **55** is provided which receives the leading edge of the copy sheet directly upon emergence from the developer unit and which maintains the leading edge and following portion of the copy sheet captive along a predetermined path of movement while radiant heat is applied. Moreover, novel means are provided for removing unwanted heat when there is no copy sheet ready to be acted upon in the fixing unit, thereby to prevent unwanted temperature build-up in the fixing unit and in the photocopy machine as a whole.

Referring to FIG. 12, the source of radiant heat in the present instance is in the form of two transversely extending heat lamps **361**, **362** arranged side by side. These lamps are preferably constructed as shown in FIG. 15

having a cylindrical quartz envelope and a filament operated at such temperature that a major portion of the output is in the red and infrared range. The wave length of this radiation is adjusted so as to melt the black toner with a minimum wattage input to the heaters. The substantially white coated electrophotographic paper surface in the non-image areas remains at a substantially lower temperature, since it reflects the relatively short wave length infrared radiation transmitted through the quartz tubes. The lamps have terminals extending from their ends which are received in terminal blocks **363**, **364** respectively. Arranged behind the lamps is a reflector **365** having a shield or housing **366** spaced rearwardly therefrom. Passage of air between the housing and reflector assists in maintaining the housing temperature at a safe level.

In accordance with the present invention, there is provided opposite the radiant heaters a perforated face plate and means are provided for establishing a pressure drop across the face plate in a direction to create air flow inwardly through the plate. More specifically, I provide an evacuated plenum chamber **370** connected to the vacuum side of a blower and provided with a smooth, perforated face plate **371** against which the copy sheet is held by vacuum as the sheet passes through the unit. The construction of the plenum chamber is set forth in FIGS. 16–18 inclusive. In FIG. 17 it will be noted that the face plate has a pattern of closely spaced holes and extends the entire width of the copy sheet, which is shown approaching the plate from below. As the copy sheet **41** is advanced, it is drawn by vacuum against the face plate **371**. In order to prevent any possibility of the copy sheet buckling against the lower edge of the plenum chamber, the face plate **371** preferably has a retreatingly bent lower lip or projection **372**. The face of the plate **371** is polished to minimize the friction between the copy sheet and the plate and the degree of vacuum is such that a gentle push from below is all that is required to cause the copy sheet glide over the surface of the plate.

To apply vacuum to the plenum chamber **370**, a conduit **371** is provided which is connected to the vacuum side of the blower **170** previously referred to. And to equalize the vacuum at all points along the width of the copy sheet, the conduit **371** is preferably terminated at about the center of the plenum chamber. In the present instance this is accomplished by providing a baffle plate **372** which is non-perforated, arranged as shown in the drawings. With the above disclosure in mind it will be apparent to one skilled in the art that a high degree of heat, say on the order of 700 watts, is available whenever a copy sheet is in position in front of the heaters, but heat is automatically removed in the absence of a copy sheet. Thus, when the heaters are turned "on" but with no copy sheet present, cooling air is drawn through the holes in the face plate **371**. This not only maintains the face plate at a safe temperature but also tends to cool the environment immediately surrounding the heaters. As the copy sheet, ready for fixing, passes upwardly, the flow of air through the holes in the face plate **371** is gradually cut off so that all of the heat emanating from the heaters is fully effective to act upon the copy sheet. This enables a sufficiently high level of temperature to be employed as to enable prompt and complete fixing while, nevertheless, guarding against a temperature build-up which is a characteristic risk in devices of the present type.

As the copy sheet enters the fixing unit **55**, the leading edge thereof is subjected to a rather strong current of air passing into the plenum chamber. This is advantageous since the leading edge of the copy sheet may, during its passage through the developing unit **54** pick up some of the developer powder, the amount of such pick up depending upon the thickness of the copy sheet. To insure prompt removal of toner which may be picked up on the leading edge of the copy sheet, a narrow slot extending the length of the plenum chamber, and as indicated at **373** (FIG. 12) may be used. In any event, the powder is effectively removed by the draft of air prior to the time that the copy sheet is acted upon by the radiant heat. Thus there is no possibility of contaminating either the sheet or the machine with the unwanted powder. The plenum chamber during standby conditions acts as a constantly running "vacuum cleaner," disposing of unwanted toner anywhere in the environment.

Preferably fine metal wires are strung across the edges of the shield **365** so that if the vacuum should even momentarily fail, a sheet passing through the fixing unit cannot contact the heaters. Such wires may be spaced parallel to one another in a diagonal pattern.

When the copy sheet leaves the fixing unit **55** it engages a final pair of expeller rollers **375**, **376**. As shown in FIG. 1, the developing means, fixing means, and expeller rollers are in vertical alinement to provide a substantially straight line path of travel for the copy sheet as it leaves the developing means. Upon leaving the expeller rollers, the copy sheet is deflected forwardly by a deflector plate **377** and discharged through the upper orifice **42** (FIG. 1) in the housing of the machine. The roller **370** on the image surface is of smooth metal, so as to smooth the image, which may be still somewhat soft at this position. Roller **376**, on the back of the copy sheet may be of roughened metal or of rubber.

In accordance with one of the features of the invention a novel transporting arrangement is provided for both the original and copy sheet, powered by a single driving motor, so that both of the sheets are synchronized in speed up to the point of final discharge from the machine. This includes the driving of rollers on the discharge side of the fixing unit. Transport is accomplished in the present instance by employing an arrangement of "cog" belts and gears, utilizing for driving purposes the space available at the left and right-hand sides of the machine while, nevertheless, permitting the machine to be easily disassembled into its component sub-assemblies without necessity for separately disconnecting the power driving train. FIG. 5 shows the gearing for accomplishing the above on a "near" side of the machine, FIG. 6 shows the belting on the "far" side of the machine, and FIG. 6*a* is a diagram showing the frame with the sub-assemblies in exploded position. The main frame of the machine includes vertical side members **401**, **402** which support the optical enclosure **140** between them. Secured to the top surfaces of the frame members **401**, **402** are the developing unit **54** and fixing unit **55** stacked in "piggy-back" relation. Suitable means, for example, machine screws, are provided for holding all of the above named members together so that they provide a strong and rigid structural assembly which may, for the sake of lightness, be made of aluminum or other light metal.

In carrying out the invention, the transport means for the original and copy sheet respectively are self contained in subframes **405**, **406** (FIG. 6*a*) which are of symmetrical construction and of generally L shape. The sub-assembly **406**, by way of example, includes a pair of end plates **408** for journaling the various rollers, the end plates being held rigid with respect to one another by longitudinal plates **409**, **410** (FIG. 2) to form a rigid box-like construction. For the purpose of securing the roller sub-frame **405** to the main frame members **401**, **402**, fasteners **411** are provided, one at each end of the subframe, and which engage cooperating fastening members **412**. Such fasteners are of the commercially available type in which a 90° turn of the element **411** by a tool such as a screwdriver is sufficient to produce engagement or disengagement. A similar pair of fastening elements **413** having cooperating elements **414** serves to hold in place the upper subframe **406**. To tie together the front ends of the subframes **405**, **406** a front plate or entry member **420** is provided having similar fasteners **421**, **423** at each end cooperating with elements **422**,

424 respectively on the subframes. Extending from the front plate 420 are the lips 36, 38 and separator plate 37 which define the entry slots for the original and copy sheet. It will be apparent that when the fasteners are turned tight, the main frame, subframes and entry member form a rigid assembly in which all of the necessary driving elements are engaged, whereas when the fastening elements are loosened, in order to provide access to the windows for clearing any obstruction, the driving means are readily disengaged.

Accordingly, attention may next be given to the specific means for driving all of the rollers in the various parts of the machine, reference being made to FIGS. 2–6 inclusive. Serving as the source of driving torque is a motor 440 which drives a transversely extending jack shaft 441 through a pair of bevel gears 442. On the near side of the jack shaft is a spur gear 441*a* which meshes with a spur gear 71*a* which drives the roller 71 in the lower subframe. The latter, in turn, meshes with a spur gear 101*a* which drives the roller 101 in the upper subframe. The cooperating rollers 72 and 102 are driven by friction from the rollers which they respectively engage.

Turning attention to the drive in the lower subframe 405, a driving belt 443 is provided at the far side of the machine (FIG. 6) for coupling together a pulley 71*b* on the roller 71 and a pulley 75*b* associated with the roller 75. The roller 76 is driven by friction from the roller 75. To produce rotation of the roller 112 which drives the fabric belt 111, the roller 75 and roller 112 which drives the fabric belt 111, the roller 75 and roller 112 are coupled together by means of spur gears 75*c*, 112*c* (FIG. 5). The roller 65 is driven from the roller 71 by means of a belt 445 trained about pulleys 71*c*, 65*c*. The roller 61 is driven in turn from the roller 65 by means of a belt 446 trained about pulleys 65*b*, 61*b*. Roller 81 is driven from the roller 61 by spur gears 61*a*, 81*a*. To insure that the rollers 65, 66 rotate in perfect unison, auxiliary gears 65*d*, 66*d* are provided (see FIG. 5*a*), while friction is relied upon to drive the roller 62 from the roller 61.

Referring to the drive in the upper subframe, the roller 105 is driven by the roller 101 by means of a belt 444 trained about pulleys 101*b*, 105*b* respectively. Rollers 102 and 106 are frictionally driven by the rollers 101, 105 which they respectively engage. For the purpose of driving the fabric belt 121, the roller 122 which engages such belt as coupled to the roller 105 by means of a pair of spur gears 105*c*, 122*c* at the "near" side of the machine (FIG. 5).

For the purpose of driving the developing roller 211 at a speed which is proportional to the movement of the paper, a driving belt 447 is provided at the far side of the machine engaging a pulley 441*b* on the jack shaft 441 and a pulley 211*b* on the roller 211. Finally, rotative power is transmitted to the upper transport rollers 375, 376 via a belt 448 which engages pulleys 211*a* and 375*a*. The two augers in the developer bin are driven by a belt 337 as previously mentioned in connection with FIG. 13, by torque derived from the rotation of the developing roller 211.

All of the belts 443–448, and the pulleys which they engage, are of the "cog" type employed in timing trains. Consequently there is no possibility of slippage anywhere in the system and synchronization between all of the various rollers is assured.

It may now be observed that when the subframes 405, 406 are separated from one another as shown in FIG. 6*a*, and separated from the main supporting frame, automatic disengagement occurs between the gears 71*a*, 441*a*, 65*a*, 91*a*, and 61*a*, 81*a* and it is not necessary to disengage any of the driving belts.

Control Circuit

The preferred form of circuit for controlling operation of the photocopy machine described above is set forth in FIG. 19. Current from the regular power supply line, such as a standard 117 v. A.-C. line, is fed via a cord 460 to a first bus 461 and a second bus 462 under the control of a double-pole single-throw main switch 463. This turns on the heaters 361, 362 in the fixing unit and the drive motor 440 as well as a pilot light 464 in parallel therewith.

In order to decrease the required warmup time, the blower motor 171 is not immediately turned on. Instead, a thermal time delay relay 465 connected across the lines 461, 462 is actuated to close the timer contacts 466, thereby to apply voltage to the blower motor after a time delay of approximately sixty seconds. Connected in parallel with the blower motor 171 is a sealing-in-relay 470 having contacts 471 in parallel with the time delay contacts 466 so that for normal running operation no dependence is placed upon the current carrying capabilities of the contacts in the time delay relay. Closure of the contacts 471 causes voltage to be applied to a "ready" bus 473, thereby energizing a ready light 474 to indicate to the operator that the unit is in readiness for the feeding of the original and copy sheet.

In carrying out the invention, both the corona power supply and the illuminating lamps are turned off when the machine is in the "ready" condition, and means actuated by insertion of the paper are employed to turn on these two units. The sheet-actuated switch employed for this purpose and indicated at 480 has a switch arm controlling a normally open contact 481 and a normally closed contact 482. In accordance with the invention relay means is provided, actuated by momentary contact in the switch 480, for closing a circuit to the corona power supply and illuminating lamps as long as the copy sheet is passing adjacent the switch 480 plus an additional time interval on the order of fifteen seconds to enable the "tail" of the copy sheet to complete passage through the machine. To accomplish this in the present instance, I provide a relay 490 having a main contact 491, a normally open sealing-in contact 482, an isolating contact 493 and a timer-energizing contact 494. Thus when contact 481 is at least momentarily made by inserting the sheet, the main contact 491 immediately closes to energize a bus 495 to supply current to the corona power supply and the illuminating lamps. Closure of the contacts 491, 492 in series therewith serves to seal in the relay coil, and the opening of contact 493 makes the relay coil independent of the contact 481 on the sheet switch. Both the corona power supply and the illuminating lamps remain "on" as the paper passes through the machine. When the tail end of the paper leaves the switch 480, the normally closed contact 482 is restored to its closed condition, thereby energizing a timer 496. The latter provides approximately fifteen seconds time delay prior to opening of its normally closed contact 497 which is in series with the relay coil. This fifteen second delay allows ample time for the paper to "clear" the machine and keeps the unit "on" between sheets fed in succession. At the end of the delay period when the contact 497 opens, the relay 490 is dropped out, thereby opening the main switch 491 and turning off both the corona power supply and the illuminating lamps. Simultaneously the relay contact 494 on the relay 490, which is in series with the timer, is opened so that the timer is shut off in readiness for an ensuing operating cycle.

In order to operate the replenishing vibrator, a switch 498 is provided in series with the vibrator coil 350 across the lines 461, 462. This switch may be operated manually or by means of a counter 499 which is effective to close the switch automatically after a predetermined number of copy sheets have been passed through the machine. A counter capable of making contact after a predetermined number of impulses have been received is, of course, well known to those skilled in the control art.

The intensity of the exposing lamps 151, 152 may be

varied by a rheostat **500**. This is the only variable in the machine requiring setting by an operator, and even this, once set, need not be touched except for copying originals which are especially "thin" or especially dark. Left at an average setting, copies are assured and there is no necessity for trial and error to determine the proper exposure, hence no wasted copies.

It will be apparent that operation of the photocopy machine disclosed herein requires only the closing of the main switch **463** and, upon lighting of the ready light **474**, the insertion of an original and a copy sheet into the slots provided at the front of the machine. Additional sheets may be fed into the machine as long as the ready light is lit and no particular care or attention need be exercised. Accurate, crisp copies are received in a matter of seconds. In spite of the fact that the copy sheet is exposed while in motion, the sharpness of the copy is fully equal to that secured in machines where both original and copy sheet are maintained stationary during exposure.

Because of the novel folded optical arrangement, the machine is exceedingly compact enabling illumination of the original and exposure of the copy sheet within a few inches of one another. While the machine depends for its success upon the maintenance of perfect synchronism between the original and copy sheet, the driving arrangement is such as to maintain this synchronism with a high order of accuracy, while being both simple and inexpensive. Because of the detachable subframe construction, the subframes may be removed in a matter of seconds, with automatic breaking of the driving connections to the rollers contained therein, as may be reqiured for the servicing of the machine or for the clearing of any obstruction which may develop, for example, as the result of a foreign object such as a paper clip inadvertently left on the original. Consequently, the machine is extremely easy to service and maintain. Both the illuminating lamps and the heaters in the fixing unit may be easily replaced after their rated use. Electronic components, such as in the power supply and timing units, may conveniently be provided with plug-in connectors to further facilitate servicing.

While the invention has been described in connection with a dry developer unit, it will be understood by one skilled in the art that the invention in certain of its aspects is not limited thereto and that a liquid type developer unit may, if desired, be substituted in the upper position. Printer's ink suspended in a dielectric liquid such as Freon has been employed.

It will, moreover, be appreciated by one skilled in the art that because of the symmetry of the frame, subframes, and optical housing such structures, minus the disclosed developer and fixer unit, may be mounted upside down with respect to the base, so that the copy containing the latent image comes out at the bottom for convenient feeding into a trough developer. Such an arrangement is shown diagrammatically in FIG. 20, the trough being indicated at **501** and the toner vehicle mix at **502**. The copy sheet feeds downwardly into the trough and thereafter passes through expeller rollers **503**, **504**. Regardless of the positioning of a liquid developer, where such mode of development is used, the copies are produced substantially dry and no fixing is required.

I claim as my invention:

1. In a photocopy machine of the electrophotographic type for use with an original and a copy sheet, a frame having an optical housing, means in said frame providing closely spaced parallel slots for insertion of the original and copy sheet into the respective slots arranged face to face, means for charging the copy sheet, said housing having a first wall and a second wall arranged opposite thereto, with the first wall having rectangular windows therein spaced edge to edge parallel to one another, means for positively transporting the original and copy sheet perpendicularly toward the space between said windows, means including drive rollers for diverting the original and copy sheet away from one another and through an angle of approximately 90° so that the original and copy sheet are directed past the windows respectively travelling at the same rate of speed, the first wall of said housing being recessed in the space between said windows to accommodate said rollers with the nips of the rollers being generally alined with the plane of the windows, means for illuminating the original over the entire width thereof as it passes the illuminating window, a lens and cooperating mirror at the opposite wall of said housing so that the reflected image of the original is cast upon the copy sheet as it passes the exposing window, and means for applying finely divided toner powder to said copy sheet for developing a latent image thereon.

2. In a photocopy machine of the electrophotographic type for use with an original and a copy sheet, the combination comprising, an optical enclosure on said frame providing an illuminating window and exposing window and having optical means for reflecting an image from said illuminating window to said exposing window, means arranged generally at right angles to the plane of said windows for feeding in the original and copy sheet together arranged face to face, symmetrically arranged pairs of entry rollers for engaging the respective sheets, means for charging the copy sheet, said windows each having a sheet of transparent material to define precise illuminating and exposing planes, transport means for feeding said original and copy sheet in opposite directions including pairs of transport rollers arranged along the opposite edges of said windows and recessed so that the nips of the rollers are substantially alined with the windows, pressing means extending over substantially the entire width and height of the windows and closely adjacent thereto for constantly pressing the original and copy sheet against the respective windows for formation of a sharp latent image on said copy sheet, and common driving means for positively driving the transport rollers at precisely the same speed as said entry rollers.

3. In a photocopy machine of the electrophotographic type for use with an original and a copy sheet, the combination comprising a main frame, a lower subframe and an upper subframe mounted on one side of the main frame to define a horizontal parting line between the subframes, an optical enclosure on said main frame having upper and lower windows facing the subframes respectively, reflector means arranged symmetrically opposite the windows, means for feeding the original and the copy sheet into the machine arranged face to face and substantially alined with said parting line with means for separating the sheets so that the original enters one of said subframes and the copy sheet enters the other of said subframes, means in the subframe reeciving said copy sheet for charging the same, transport means in said subframes for causing the original and copy sheet to be turned substantially 90° in opposite directions for passage by the respective windows, and disengageable means for securing the subframes to said main frame to permit the subframes to be quickly removed from said main frame for access to said transport means and to said windows.

4. In a photocopy machine of the electrophotographic type for use with an original and a copy sheet, the combination comprising a main frame, a lower subframe and an upper subframe mounted one above the other on one side of the main frame so that forwardly extending ends are presented defining a horizontal parting line between the subframes, an optical enclosure on said main frame having upper and lower windows facing the subframes respectively, reflector means arranged symmetrically opposite the windows, an entry member disengageably secured to the presented ends of the subframes and defining entry slots for feeding the original and the copy sheet into the machine face to face with means for separating the sheets so that the original enters one of said subframes and the copy sheet enters the other of said

subframes, means in the subframe receiving said copy sheet for charging the same, transport means in said subframes for causing the original and copy sheet to be turned substantially 90° in opposite directions for passage by the respective windows, and disengageable means for securing the subframes to said main frame.

5. In a photocopy machine of the electrophotographic type for use with an original and a copy sheet, the combination comprising a main frame, a lower subframe and an upper subframe mounted back to back on one side of the main frame to define a horizontal parting line between the subframes, an optical enclosure on said main frame having upper and lower windows facing the subframes respectively, reflector means arranged symmetrically opposite the windows, means for feeding the original and the copy sheet into the machine arranged face to face and substantially alined with said parting line with means for separating the sheets so that the original enters one of said subframes and the copy sheet enters the other of said subframes, means in the subframe receiving said copy sheet for charging the same, transport means in said subframes for causing the original and copy sheet to be turned substantially 90° in opposite directions for passage by the respective windows, disengageable means for securing the subframes to said main frame, and a developer unit and a fixer unit mounted on the top of said main frame free of direct connection to the adjacent subframe so that the subframes may be removed from said main frame for servicing independently of said developer and fixer units.

6. In a photocopy machine of the electrophotographic type for use with an original and a copy sheet, the combination comprising a frame, a light tight housing having a first wall and a second wall opposed thereto, an illuminating window and an exposing window in said first wall, means for transporting the original past said illuminating window, means for charging the copy sheet and for transporting it past the exposing window, a lens and cooperating mirror mounted on said second wall so that the moving image of the original is cast upon the copy sheet as the latter passes the exposing window, said windows having a width sufficient to accommodate the widths of the original and copy sheet respectively but having a height in the direction of sheet movement which is only a small fraction of the length of the sheet, means for thereafter developing the latent image on said copy sheet, said illuminating window having an elongated light source which extends substantially the entire width of the window but which is discontinuous at the center portion thereof in order to reduce the level of illumination falling upon the central portion of the original thereby to equalize the light intensity of the image across the width of the exposing window.

7. In a photocopy machine of the electrophotographic type for use with an original and a copy sheet, the combination comprising a frame, an optical housing having a first wall and a second wall opposed thereto, an illuminating window and an exposing window in said first wall, means for transporting the original past said illuminating window, means for charging the copy sheet and for transporting it past the exposing window, a lamp housing secured to the optical housing having a lamp extending the width of the illuminating window for illuminating the latter, a lens having a cooperating mirror mounted at said second wall so that the moving image of the original is cast upon the copy sheet as the latter passes the exposing window, said windows having a width sufficient to accommodate the widths of the original and copy sheet respectively but having a height in the direction of sheet movement which is only a small fraction of the length of the sheet, means closely adjacent the exposing window for thereafter developing the latent image on said copy sheet, a sheet of light transparent material interposed between the two housings for isolating them against the passage of air, and means for driving cooling air through said lamp housing.

8. In a photocopy machine of the electrophotographic type for use with an original and a copy sheet, the combination comprising a frame, a light tight housing having an illuminating window and an exposing window, means for transporting the original past said illuminating window, means for charging the copy sheet and for transporting it past the exposing window, a lens having a cooperating mirror so arranged that the moving image of the original is cast upon the copy sheet as the latter passes the exposing window, said windows having a width sufficient to accommodate the widths of the original and copy sheet respectively but having a height in the direction of sheet movement which is only a small fraction of the length of the sheet, means closely adjacent the exposing window for thereafter developing the latent image on said copy sheet, said illuminating window having an elongated light source which extends substantially the entire width of the window, and a contoured mask in the light path to equalize the light intensity of the image across the width of the exposing window.

9. In a photocopy machine of the electrophotographic type for use with an original and a copy sheet, the combination comprising means for admitting and transporting the original and a copy sheet along separate paths, means for charging the copy sheet, optical means for projecting the image of the original onto said copy sheet to form a latent image thereon, developing means for applying finely divided toner to the copy sheet for developing the latent image thereon, a fixing unit for receiving the copy sheet from the developing means, said fixing unit having a plenum chamber having a perforate wall, a source of radiant heat arranged opposite said wall, means for conducting the copy sheet flatly along said wall for acting upon by the source of radiant heat, and means for drawing a vacuum in said plenum chamber so that the copy sheet is kept in contact with said wall and away from said source of radiant heat when a sheet is present and so that convection currents pass through said perforate wall to carry heat away from said radiant source when no sheet is present thereby to keep down the temperature under standby conditions.

10. In a photocopy machine of the electrophotographic type for use with an original and a copy sheet, the combination comprising means for admitting and transporting the original and a copy sheet along separate paths, means for charging the copy sheet, optical means for casting the image of the original onto said copy sheet to form a latent image thereon, developing means for applying finely divided toner to the copy sheet for developing the latent image thereon, a fixing unit for receiving the copy sheet from the developing means, said fixing unit having means defining a wall and a source of radiant heat arranged opposite said wall, means for conducting the copy sheet flatly along said wall for acting upon by the source of radiant heat, means including air ducts for drawing heat from the space between the radiant heat source and the wall, and means controlled by entry of a sheet into said space for cutting off the flow of air in said ducts.

11. In a photocopy machine of the electrophotographic type for use with an original and a copy sheet, the combination comprising means for charging the copy sheet, means for casting the image of the original onto said copy sheet to form a latent image thereon, developing means for applying finely divided toner to the copy sheet for developing the latent image, a fixing unit for receiving the copy sheet from the developing means, said fixing unit including a perforate wall, a source of radiant heat arranged opposite said wall, means for conducting the copy sheet flatly along said wall for acting upon by the source of radiant heat, and means creating a pressure difference on opposite sides of said wall so that the copy sheet is kept in contact with said wall and spaced from said source of radiant heat when a sheet is present and so that con-

vection currents pass through said perforate wall to carry heat away from said radiant source when no sheet is present thereby to keep down the temperature under standby conditions.

12. In a photocopy machine of the electrophotographic type for use with an original and a copy sheet, the combination comprising entryway means for feeding the original and the copy sheet into the machine, means for charging the copy sheet, an illuminating station having a light source, an exposing station, means for transporting the original into the illuminating station and the copy sheet into the exposing station with both sheets moving at the same speed, optical means interposed between the illuminating station and the exposing station so that the image of the original is cast upon the copy sheet at the exposing station, means for thereafter applying finely divided toner to the exposed copy sheet for developing the latent electrostatic image therein, control means including a switch at said entryway means for turning on said light source incident to the feeding of a sheet into the machine, said control means including a timer actuated by said switch when the tail end of the sheet leaves said switch for maintaining said light source turned on for an additional length of time adequate for complete exposure of the sheet at said exposing station.

13. In a photocopy machine of the electrophotographic type for use with an original and a copy sheet, the combination comprising entryway means for feeding the original and copy sheet into the machine, means for charging the copy sheet, an illuminating station having a light source, an exposing station, means for transporting the original into the illuminating station and the copy sheet into the exposing station with both sheets moving at the same speed, optical means interposed between the illuminating station and the exposing station so that the image of the original is cast upon the copy sheet at the exposing station, means for thereafter applying finely divided toner to the exposed copy sheet for developing the latent electrostatic image thereon, and control means including a switch at said entryway means operated by said sheet for turning on said charging means and said illuminating means, said control means including a timer for maintaining the charging and illuminating means turned on for a predetermined time interval after the tail of the sheet leaves the switch.

14. In a photocopying machine of the electrophotographic type for use with an original and a copy sheet, the combination comprising entryway means for feeding the original and copy sheet into the machine, means for charging the copy sheet, an illuminating station having a lamp, an exposing station, means for transporting the original into the illuminating station and the copy sheet in to the exposing station with both sheets moving at the same speed, optical means interposed between the illuminating station and the exposing station so that the image of the original is cast upon the copy sheet at the exposing station, means for applying finely divided toner to the exposed copy sheet for developing the latent electrostatic image thereon, means including a radiant heater for fixing said image, means for turning on said heater and said transport means, and control means including a switch operated by the feeding of a sheet into said entryway means for turning on said charging means and said lamp as long as the sheet is being acted upon in the machine.

15. In a photocopying machine of the electrophotographic type for use with an original and a copy sheet, the combination comprising entryway means for feeding the original and copy sheet into the machine, means for charging the copy sheet, means including a lamp for exposing the charged copy sheet to the image of the original, developing means including a trough for applying finely divided toner to the exposed copy sheet for developing the latent electrostatic image thereon, transport means for said original and copy sheet, control means including a switch operated incident to the feeding of a copy sheet into said entryway means for turning on said charging means and said lamp, a toner reservoir, and means actuated upon completing a predetermined number of operations of said switch for causing a predetermined amount of toner to pass from the reservoir to said trough.

16. In a photocopy machine of the electrophotographic type for use with an original and a copy sheet, the combination comprising a frame, charging means for the copy sheet, a light tight housing on said frame having an illuminating window and an exposing window optical means for receiving an image from the illuminating window and for casting such image upon said exposing window, means for transporting the original and charged copy sheet past said illuminating window and exposing window respectively at equal speed for the creation of a latent image on the surface of said copy sheet, a developer bin having a supply of finely divided toner powder, means defining a receiving slot in the bottom of said toner bin for receiving the copy sheet as it passes upwardly from said exposing window, and a movable flap normally closing said slot, said flap being so constructed and arranged that the leading edge of the copy sheet upon advancement by the transport means engages and pushes aside the flap an amount just sufficient to admit the sheet into the toner bin for developing the latent image thereon, and a fixing unit positioned to receive the copy sheet from said bin for permanently fixing in place the toner particles thereon.

17. In a photocopy machine of the electrophotographic type for use with an original and a copy sheet, the combination comprising a frame, means defining a slot in said frame for receiving the original and the copy sheet face to face, means for separating the sheets, means for charging the copy sheet, an illuminating station having an object window and source of light, an exposing station having an image window with said windows being substantially coplanar and spaced edge to edge, said receiving slot being located in a plane between said windows and pairs of transport rollers located at said receiving slot and at the edges of said windows respectively and having common driving means so that the original is transported past the object window and the copy sheet is transported past the image window at precisely the same speed, a lens and coperating mirror spaced from the plane of said windows and symmetrically arranged with respect thereto so that the moving copy sheet is exposed to the reflected image of the moving original, developing means arranged above the image window for depositing finely divided toner powder on the copy sheet for developing the latent image thereon, fixing means including a source of radiant heat arranged above the developing means, and a pair of expeller rollers arranged above the fixing means, said developing means and fixing means and expeller rollers all being closely nested with respect to the exposing station so that the copy sheet is engaged by said expeller rollers while it is still in engagement with the rollers adjacent the image window and said expeller rollers being coupled to said common driving means for rotation at a surface speed which is substantially that of the transport rollers, said developing means, fixing means, and expeller rollers being in vertical alinement to provide a substantially straight line path of travel for the copy sheet as it leaves the developing means.

18. In a photocopy machine of the electrophotographic type for use with an original and a copy sheet, the combination comprising a frame, a light tight housing having an illuminating window and an exposing window, means for transporting the original past said illuminating window, means for charging the copy sheet and for transporting it past the exposing window, a lens and cooperating mirror so arranged that the moving image of the original is cast upon the copy sheet as the latter passes the exposing window, said windows having a width sufficient to accommodate the widths of the original and copy sheet respectively but having a height in the direction of sheet movement which is only a small fraction of the length of

the sheet, means for thereafter developing the latent image on said copy sheet, said illuminating window having an elongated light source which extends substantially the entire width of the window for directing light on the latter but which is formed of a pair of axially spaced light emitting elements in order to reduce the level of illumination falling upon the central portion of the original thereby to equalize the light intensity of the image across the width of the exposing window.

References Cited in the file of this patent

UNITED STATES PATENTS

1,748,489	McCarthy	Feb. 25, 1930
2,234,717	Altman et al.	Mar. 11, 1941
2,641,997	Butterfield et al.	June 16, 1953
2,676,100	Huebner	Apr. 20, 1954
2,786,439	Young	Mar. 26, 1957
2,786,441	Young	Mar. 26, 1957
2,790,082	Gundlach	Apr. 23, 1957
2,889,758	Bolton	June 9, 1959
2,890,633	Huebner	June 16, 1959
2,959,095	Magnusson	Nov. 8, 1960
2,975,758	Bird	Mar. 21, 1961
3,005,389	Limberger	Oct. 24, 1961

FOREIGN PATENTS

201,301	Australia	1956