May 7, 1957 E. G. ISKANDER 2,791,217

VALVULAR APPARATUS FOR USE IN SURGERY

Filed May 19, 1955

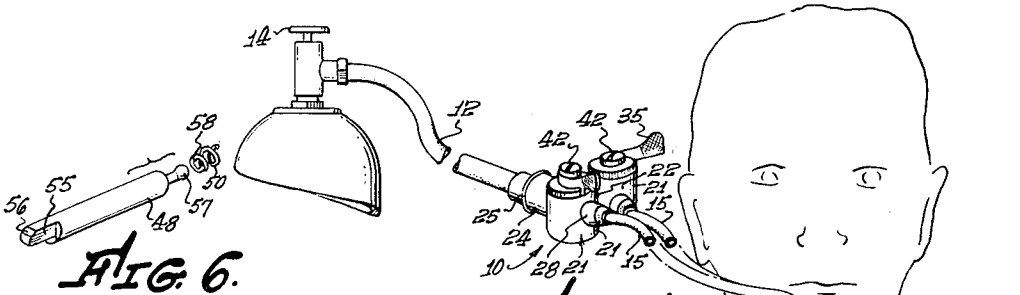

FIG. 6.

FIG. 1.

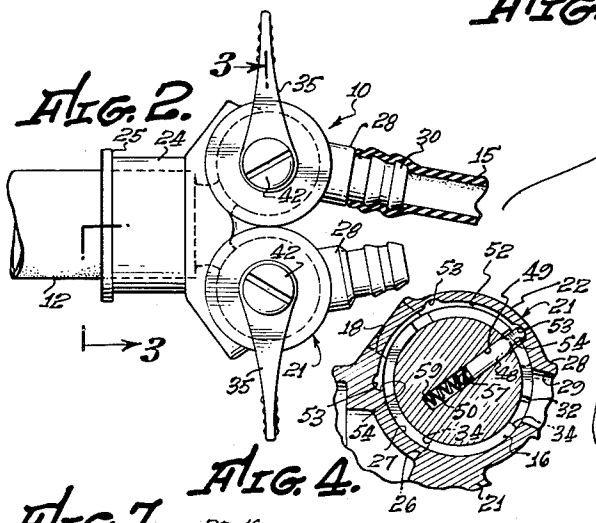

FIG. 2.

FIG. 4.

FIG. 7.

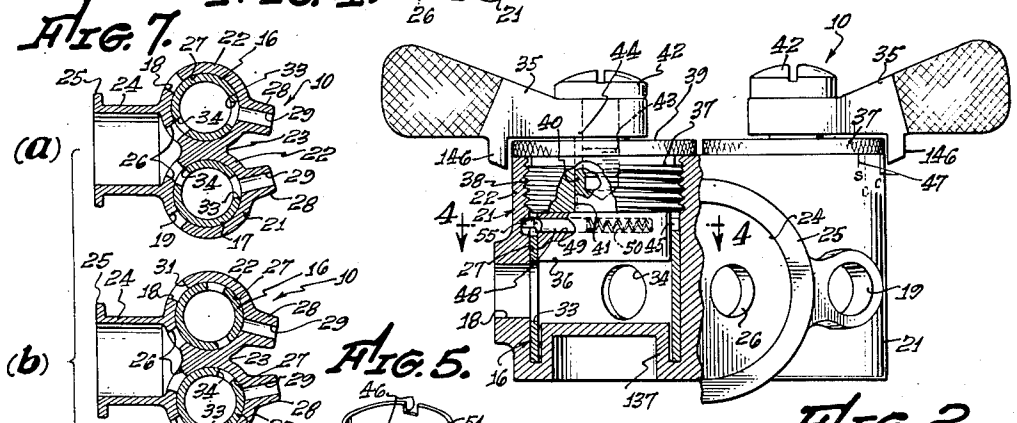

FIG. 5.

FIG. 3.

EDWARD G. ISKANDER,
INVENTOR.

BY Hopkins White

ATTORNEY.

United States Patent Office 2,791,217 Patented May 7, 1957

2,791,217

VALVULAR APPARATUS FOR USE IN SURGERY

Edward G. Iskander, Beirut, Lebanon

Application May 19, 1955, Serial No. 509,647

10 Claims. (Cl. 128—203)

This invention relates to improved systems and valves for controlling the breathing of a person during an operation or lung test, or for controlling the drainage or suction of accumulated fluids from the lungs when desired.

A major object of the invention is to provide a control valve unit which is adapted to selectively place the lungs of a patient in communication with either the atmosphere or a source of oxygen, the oxygen source typically being a conventional anesthetic machine. Preferably, the valve unit is capable of controlling the air or oxygen delivery to one lung independently of the delivery to the other lung, so that the lungs may be tested separately, or one lung may be operated on while the other continues to breath. Also, the valve unit may be designed to completely block off either of the lungs when desired. A particular feature of the invention is to provide a valve unit of the above character which is especially adapted to pass a small diameter flexible tube through the valve unit and through the main breathing lines to the interior of the lungs, for taking suction from the lungs when desired, to draw off accumulated blood, pus or other liquids from the lungs.

The above and other features and objects of the present invention will be better understood from the following detailed description of the typical embodiment illustrated in the accompanying drawing in which:

Fig. 1 is a fragmentary partially schematic view of a breathing control system construction in accordance with the invention;

Fig. 2 is an enlarged plan view of the valve unit shown in Fig. 1;

Fig. 3 is a further enlarged section taken on line 3—3 of Fig. 2;

Fig. 4 is a fragmentary section taken on line 4—4 of Fig. 3;

Fig. 5 is a perspective view, partially broken away, of one of the valve elements;

Fig. 6 is an enlarged perspective view of one of the detents in the valve unit; and

Fig. 7 comprises three transverse sectional views of the valve unit, showing the valve elements in three different positions.

Referring first to Fig. 1, I have shown at 10 a valve unit for individually controlling the breathing of the two lungs 11 of a patiient. The unit 10 is connected by a flexible hose 12 to a source of oxygen 13 which is to be fed to the lungs 11. The oxygen source 13 may typically be a suitable oxygen tank, or may be a suitable conventional anesthesia apparatus. The oxygen from source 13 leaves unit 10 through a pair of flexible double lumen endotracheal tubes 15, leading to the two lungs 11 respectively. Valve unit 10 contains two rotary valve elements 16 and 17, each of which is rotatable between three different positions. In a first of these positions, the valve element 16 or 17 admits oxygen to the lungs. In a second position, the valve element places the associated lung in communication with a vent opening 18 or 19 on the valve body, so that the lung may breathe atmospheric air, or

so that a suction or drain tube 20 may be inserted through the valve unit and into the associated tube 15 to extend through that tube into one of the lungs. In the third position of each valve element 16 or 17, the valve element serves to close off communication between the associated lung and both the oxygen source 13 and the atmosphere.

Valve unit 10 includes a body 21 having two parallel cylindrical hollow portions 22 joined together at 23. At a first side of portions 22 of the body, and extending essentially transversely of the axes of portions 22, the body includes a tubular oxygen inlet portion 24, to which supply line 12 is connected by stretching that flexible tube onto tubular portion 24 past a flange 25. Tubular inlet 24 communicates with the interior of both cylindrical portions 22 of the valve body through a pair of apertures 26 in the sides of those cylindrical portions. Valve elements 16 and 17 are rotatively mounted within cylindrical portions 22, in engagement with their inner cylindrical bore walls 27. At the side of body portions 22 opposite the side to which portion 24 is connected, body portions 22 have a pair of tubular projections 28 to which flexible tubes 15 leading to the lungs are connected. These tubular projections 28 contain inner straight passages 29 opening into the interiors of portions 22 of the body, for placing those portions in communication with tubes 15 respectively. Preferably, passages 29 and projections 28 extend directly transversely of the axes of cylindrical portions 22, and desirably these passages 29 and portions 28 converge slightly in a direction away from the rest of the body. Tubes 15 may be connected to portions 28 by stretching the tubes onto portions 28 and past annular retaining beads 30 formed about portions 28.

Near inlet fitting 24 and generally alined with passages 29, the cylindrical portions 22 of body 21 contain a pair of typically circular vent openings 31, through which passages 29 are placed in communication with the atmosphere in the Fig. 7c positions of the valve elements. The positioning of vent openings 31 to be essentially alined with the two passages 29 respectively allows for the insertion of a small diameter flexible suction or drainage tube 20 into each of the vent openings 31 and through a corresponding valve element 16 or 17, and then through one of the passages 29 into the associated tube 15, to extend downwardly through that tube and into the associated lung 11. In order that the tube 20 may thus pass through the valve body and tube 15 into one of the lungs, each vent opening 31 is preferably not more than about 45° out of straight alinement with the associated passage 29, and for best results is not more than about 30° out of such alinement. Also, as will appear later, the passages through valve elements 16 and 17 must of course also be so formed as to allow the desired extension of tubes 20 directly from vents 31 to passages 29.

Referring now to Fig. 5, each valve element 16 or 17 may be a tubular sleeve, having an externally cylindrical surface slideably engaging the inner wall 27 of the associated body portion 22. Each of the sleeves 16 and 17 may have an axial slit or break 32 extending along one of its sides, so that the sleeve is radially expansible, and the sleeves may be formed of resilient material which normally tends to expand to a greater diameter than the diameter of bores 27 so that the sleeves bear tightly against the engaged bore walls to assure against leakage through the valves. At one side, typically at the location of the slit 32, each sleeve 16 or 17 contains a valve opening 33, which may be somewhat elongated circularly about the axis of the sleeve. At an opposite side, each sleeve contains a second valve aperture 34, which is generally alined with aperture 33, to allow for the previously described insertion of tubes 20 through the valve unit. As in the case of vent openings 31 and passages 29,

apertures 34 and 33 are desirably not more than about 45°, and for best results not more than about 30°, out of alinement with passages 29 in the Fig. 7c positions of the valves.

In the Fig. 7a positions of valve sleeves 16 and 17, apertures 34 in the sleeves register with gas inlet openings 26, while apertures 33 register with passages 29, so that oxygen may flow through the valve unit to tubes 15 for delivery to the lungs. In position 7b of the valve elements, all communication between the lungs and either the atmosphere or oxygen supply 13 is closed off. In Fig. 7c, apertures 33 register with vent openings 31, and apertures 34 register with passages 29, to allow communication between the lungs and the atmosphere, or to allow for the insertion of two suction or drain tubes 20 through the valve unit and tubes 15 to the lungs. Of course, the two valves 16 and 17 may be set individually to different positions, to place one lung in communication with either the atmosphere or the oxygen supply system, or to close off that lung, while the other lung is in a different condition.

With reference now to Figs. 3 and 4, each of the valves 16 and 17 is adapted to be rotated between its three positions of Fig. 7 by means of a swinging handle 35 at the outside of the body. The two handles 35 are connected to a pair of actuating members 36 within the two sleeves 16 and 17, which members act to transmit the handle rotation to the sleeves. The handles 35, actuating members 36, and sleeves 16 and 17 are retained in their operative positions by means of a pair of annular covers or plugs 37 which are threadedly connected into the upper ends of cylindrical body bores 27 at 38. These plugs 37 may have upper increased diameter externally serrated flanges 39 by which the plugs may be connected into and removed from the valve body. The lower ends of bores 27 may be closed by portions 137 of the valve body, which may form cylindrical guide members extending upwardly within the lower portions of the sleeves, to assist in locating the sleeves and to minimize the dead air space in the valves.

Actuating members 36 are externally cylindrical and of a diameter corresponding substantially to the internal diameter of sleeves 16 and 17, and are received within those sleeves above the locations of apertures 33 and 34. Each of the actuating members 36 has an integral reduced diameter externally cylindrical portion 40 projecting upwardly from its lower large diameter portion, and extending through and rotatably journaled within a central vertically extending bore 41 in the associated plug or cover member 37. Each handle 35 is connected to portion 40 of one of the actuating members 36 by means of a screw 42 extending through the handle member and threadedly connected into portion 40 of the actuating member at 43. Screw 42 tightens handle 35 against the upper transverse end surface 44 of the reduced diameter portion of the actuating member, which is squared where it fits the squared handle hole.

The lower enlarged diameter portion of each actuating member 36 has a pair of diametrically opposed radially outwardly projecting lugs 45, which are received within correspondingly dimensioned notches 46 in the upper end of the associated sleeve 16 or 17, to rotatively key each actuating member 36 and the associated handle to the associated sleeve 16 or 17. Thus, each handle 35 acts to turn the associated sleeve 16 or 17 between its three Fig. 7 positions. The handles may have downwardly projecting pointer members 146 at their undersides receivable opposite markings 47 on the outer sides of cylindrical portions 22 of the valve body, to indicate when the valves are in each of their three possible Fig. 7 positions. The letters "O," "C" and "S" may be utilized for designating the positions of Figs. 7a, 7b and 7c respectively, these letters standing for the words "Oxygen," "Closed" and "Suction."

Each of the actuating members 36 carries an elongated detent element 48, which is slideably received within a transverse bore 49 in the actuating member, and is yieldingly urged radially outwardly relative to member 36 by means of a spring 50 received in the bore behind the detent element. The outer end of each of these detent elements may extend through a notch 51 in the upper end of the corresponding sleeve 16 or 17, to project radially outwardly into an arcuate detent recess 52 formed in the inner wall 27 of the corresponding cylindrical portion 22 of the body. At each of the three Fig. 7 positions of each sleeve 16 and 17, the associated detent element 48 is received within an increased depth notch 53, to releasably hold the valve in those various positions. At the ends of arcuate recess 52, there are provided a pair of shoulders 54 extending directly radially of the cylindrical valve, and engageable by a pair of opposite radially extending flat sides 55 on detent element 48, to positively prevent rotary movement of the valve beyond the positions in which detent 48 engages shoulders 54. Notch 51 in the sleeve is of a non-circular configuration corresponding to the transverse sectional configuration of the outer flat sided portion of the detent element, to hold the detent element against rotation about its axis from a position in which the flat sides 55 will engage shoulders 54, and the chamfer 56 (Fig. 6) slips easily, upwards, out of the detent recess 52 while removing the actuating member 36 for cleaning the valve unit. The inner side 57 of the detent element is clipped by or forced to side 58 of the spring 50, while the other side 59 of this spring (at its last turn) is made to be of a bigger diameter than the bore 49 to press against the wall of this bore while it is in, and stop the detent element from jumping away when released.

In using the apparatus illustrated in the drawing, the tubes 12 and 15 are first connected to valve unit 10 as shown, and the oxygen source 13 is connected to tube 12. Tubes 15 may then be inserted into lungs 11, as represented at Fig. 1. If it is desired to supply oxygen from source 13 to the lungs, handles 35 are turned to the Fig. 7a positions, to allow flow of the oxygen through sleeve valves 16 and 17 and into tubes 15 leading to the lungs. If either or both lungs are to be closed off completely, the valves 16 and 17 may be turned to their Fig. 7b positions by rotation of handles 35 to appropiate positions as indicated by pointer 146 and markings 47. To place the lungs in communication with the atmosphere through the valve unit, valve sleeves 16 and 17 are turned to their Fig. 7c positions. In these Fig. 7c positions, a pair of small diameter flexible suction or drain tubes 20 (only one shown) may be inserted through apertures or passages 31, 33, 34, and 29, all of which are sufficiently alined to allow for such insertion of tubes 20, so that the latter may extend into and through tubes 15, to project from their lower ends, to thus communicate directly with lungs 11 for draining pus or other accumulated material from the lugs. If desired, a pair of suction pumps 120 may be connected to lines 20, to withdraw the accumulation through those lines from the lungs.

I claim:

1. A breathing control unit comprising a body, means on said body to be connected to a pair of flexible breathing tubes leading to the two lungs respectively of a person, inlet means on said body to be connected to a source of oxygen to be fed to the lungs, vent means on the body leading to the atmosphere, and two rotary valves movably carried by the body for controlling the breathing through said two tubes respectively and each rotatable relative to the body to three different positions, each of said valves containing passage means which in a first of said positions place an associated one of said tubes in communication with said inlet means, and which in a second position place said one tube in communication with said vent means leading to the atmosphere, and each valve being constructed to in a third position close off

communication between the associated one of said tubes and both said inlet means and said vent means.

2. A breathing control unit as recited in claim 1, in which said body contains two bores within which said valves are received, each of said valves comprising a tubular split sleeve containing apertures registrable with said vent means and with passages in the body leading to said tubes and to said inlet means, said tubular split sleeves being resilient and bearing resiliently outwardly against the side walls of said bores.

3. A breathing control unit as recited in claim 2, including a pair of rotary actuating members in said sleeves operable to turn said sleeves, a pair of handles for turning said sleeves, a pair of detents movably carried by said actuating members and extending through openings in said sleeves to engage shoulders on said body and thereby retain the valve sleeves in said different positions relative to the body, and springs yieldingly urging said detents against the body.

4. A breathing control unit comprising a body, a pair of valves movably carried by the body and each movable relative thereto between two positions, said body containing a first pair of passages at first sides of said valves respectively to be connected to a pair of flexible breathing tubes leading to the two lungs of a person, inlet means on said body to be connected to a source of oxygen to be fed to the lungs, said body containing vent opening means leading to atmosphere and generally opposite said first passages, each of said valves containing passage means which in a first of said positions place an associated one of said tubes in communication with said inlet means, and which in a second position place said associated tube in communication with said vent means leading to the atmosphere, said vent means and said first passages and said passage means in the valves being generally alined with each other in said second positions of the valves to provide composite passages entirely through the body and valves through which a pair of small diameter flexible drain tubes may pass from the vent means through the valves and body and through said first mentioned tubes to the lungs.

5. A breathing control unit comprising a body, a pair of valves movably carried by the body and each movable relative thereto between two positions, said body containing a first pair of passages at first sides of said valves respectively, a pair of flexible breathing tubes connected to said body communicating with said first passages respectively and adapted to lead to the two lungs respectively of a person, inlet means on said body to be connected to a source of oxygen to be fed to the lungs, said body containing vent opening means leading to atmosphere and generally opposite said first passages, each of said valves containing passage means which in a first of said positions place an associated one of said tubes in communication with said inlet means, and which in a second position place said associated tube in communication with said vent means leading to the atmosphere, said vent means, said first passages, said passage means in the valves and said tubes being generally alined with each other in said second positions of the valves, and a pair of small diameter flexible drain tubes extending through said vent means and said valves and said first mentioned tubes to drain material from the lungs.

6. A breathing control unit as recited in claim 5, in which said valves are rotatable between said two positions and each to a third position in which it closes off communication between the associated one of said breathing tubes and both said vent means and said inlet means.

7. A breathing control unit comprising a body containing two essentially parallel cylindrical bores, said body having a tubular inlet portion extending generally transversely of said bores at one side thereof to be connected to a tube leading to a source of oxygen, a pair of generally parallel tubular projections extending and slightly converging outwardly from a side of said bores opposite said first side thereof and adapted to be connected to a pair of flexible breathing tubes leading to the two lungs of a person, said body containing a pair of vent openings adjacent said tubular inlet portion and placing said bores respectively in communication with the atmosphere, a pair of rotary valves in said bores respectively each rotatable between three different positions, each valve containing passage means acting in one of said positions to place said inlet means in communication with one of said tubular projections, and acting in a second position to place said one tubular projections in communication with an associated one of said vent openings, each valve being adapted in third positions to close off communication between the associated tubular projection and both said inlet and the associated vent opening, each vent and the associated tubular projection and the passage means through the associated valve being generally alined to pass a small diameter suction tube entirely through the body and valve from one of the vents to one of said first mentioned tubes and through that tube to the lung for withdrawing accumulated liquid therefrom.

8. A breathing control unit as recited in claim 7, in which said valves comprise tubular split sleeves resiliently bearing radially outwardly against the walls of said bores.

9. A breathing control unit as recited in claim 8, including closures threadedly connected to said body across first ends of said bores, actuating members in said sleeves at inner sides of said closures having lugs received in recesses in said sleeves to turn the sleeves in response to rotation of said actuating members, two handles beyond said closures and connected to said actuating members through the closures to turn the actuating members, spring pressed detents in said actuating members projecting through apertures in said sleeves and engageable with shoulders in the body to releasably retain the sleeves in said three positions, and walls closing second ends of said bores.

10. A breathing control unit comprising a source of oxygen, a pair of valves connected to said source of oxygen, a pair of flexible tubes for extending from said valves to the two lungs respectively of a person, each of said valves being actuable to three different positions and acting in a first of said positions to place said source of oxygen in communication with an associated one of said tubes, in a second position to place the associated tube and lung in communication with the atmosphere, and in a third position to close off communication between the associated tube and both the atmosphere and said oxygen supply source, and a pair of small diameter flexible drainage tubes passing through said valves and through said first mentioned tubes and adapted to drain material from the lungs.

References Cited in the file of this patent

UNITED STATES PATENTS

374,402	Fell	Dec. 6, 1887

FOREIGN PATENTS

204,674	Great Britain	June 26, 1924
562,242	France	Apr. 30, 1923