July 25, 1944. M. C. KORNRUMPF 2,354,321

EMERGENCY DOOR LOCK RELEASE

Filed Sept. 5, 1942 5 Sheets-Sheet 1

Fig. 1.

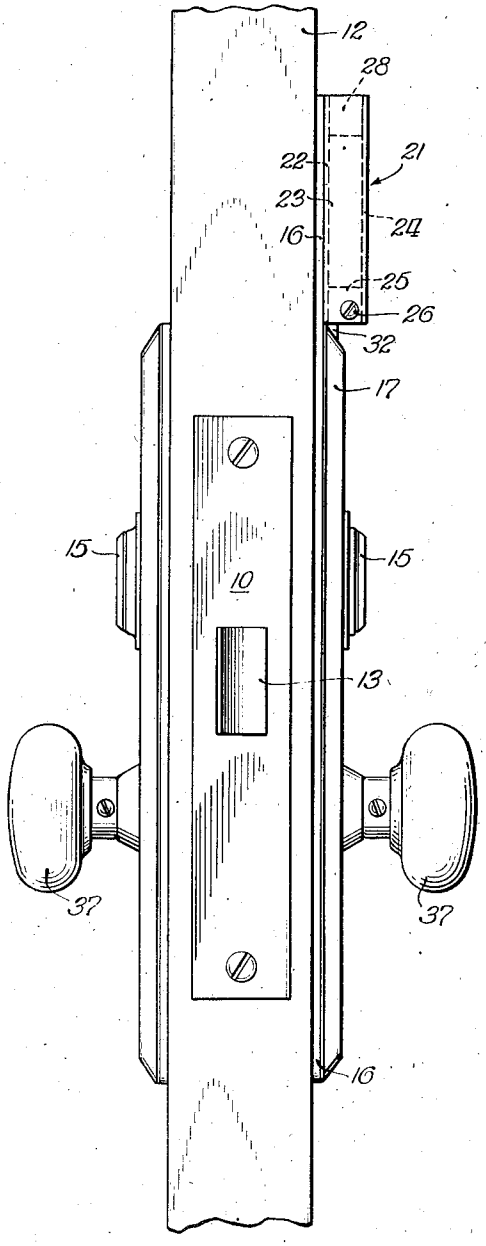

Fig. 2.

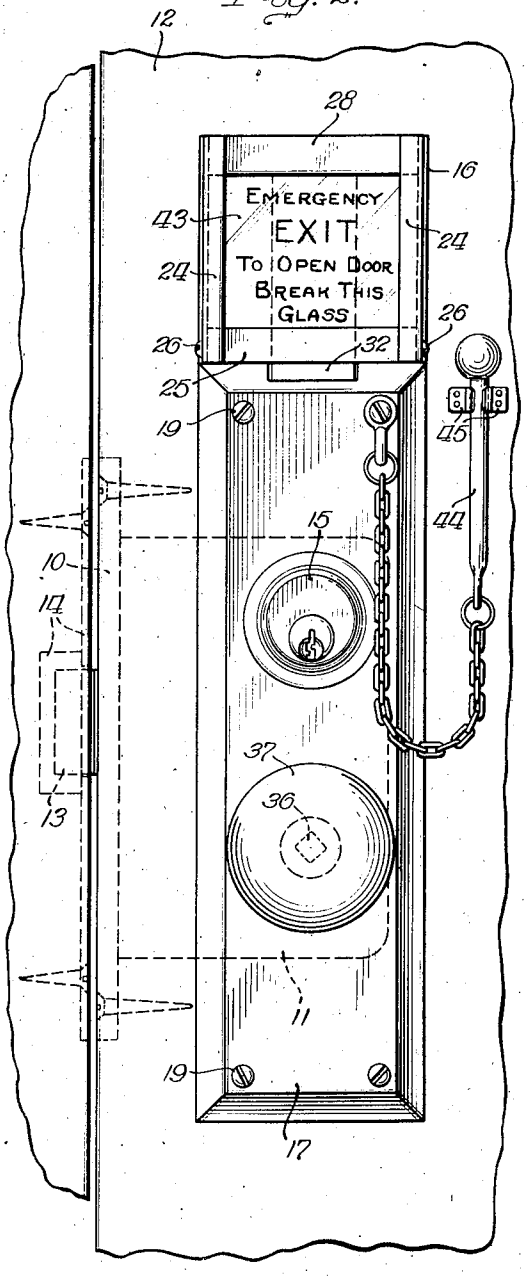

INVENTOR.
Max C. Kornrumpf
BY James J. S. Connell
Atty.

July 25, 1944. M. C. KORNRUMPF 2,354,321

EMERGENCY DOOR LOCK RELEASE

Filed Sept. 5, 1942 5 Sheets-Sheet 2

Fig. 3.

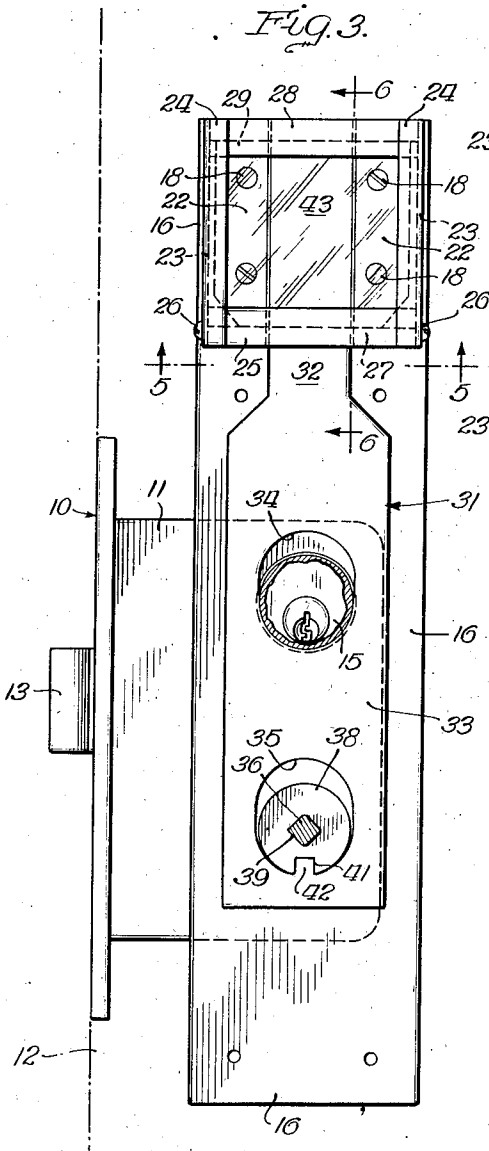

Fig. 4.

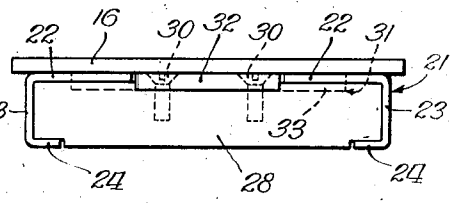

Fig. 5.

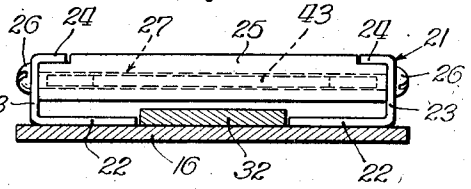

Fig. 6.

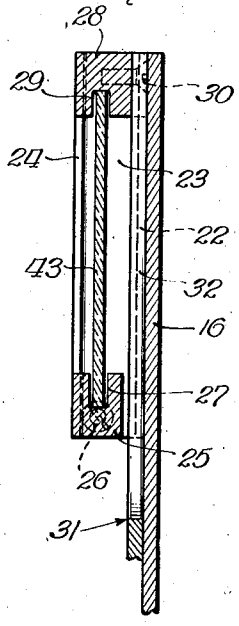

INVENTOR.
Max C. Kornrumpf
BY James J. O'Connell
Atty.

July 25, 1944. M. C. KORNRUMPF 2,354,321

EMERGENCY DOOR LOCK RELEASE

Filed Sept. 5, 1942 5 Sheets-Sheet 3

Fig. 7.

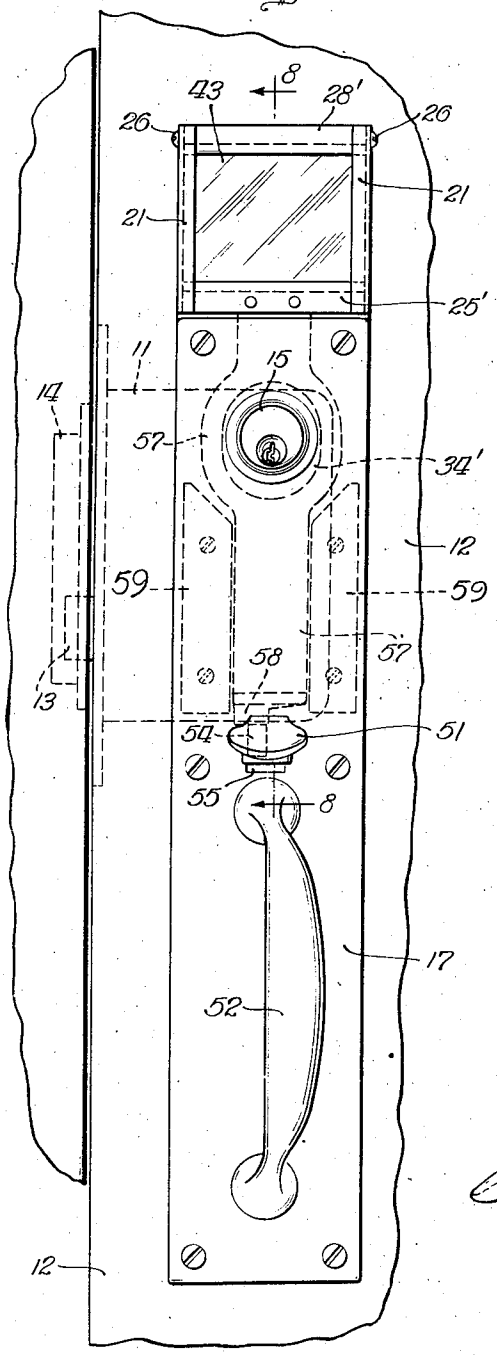

Fig. 8.

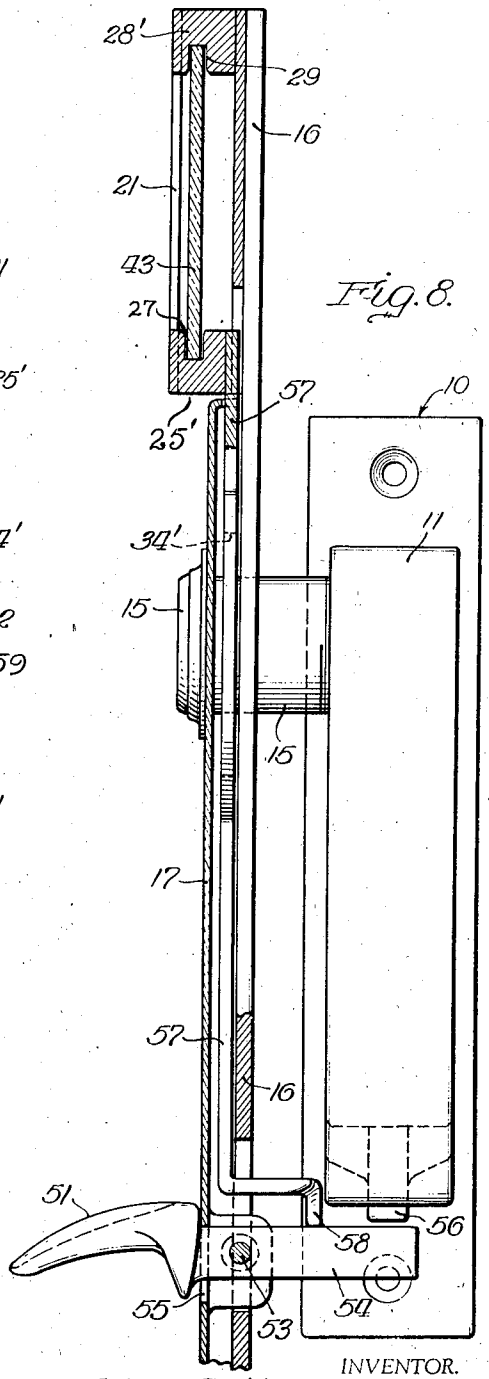

INVENTOR.
Max C. Kornrumpf
BY James J. O'Connell
Atty.

July 25, 1944. M. C. KORNRUMPF 2,354,321

EMERGENCY DOOR LOCK RELEASE

Filed Sept. 5, 1942 5 Sheets-Sheet 4

Fig. 9.

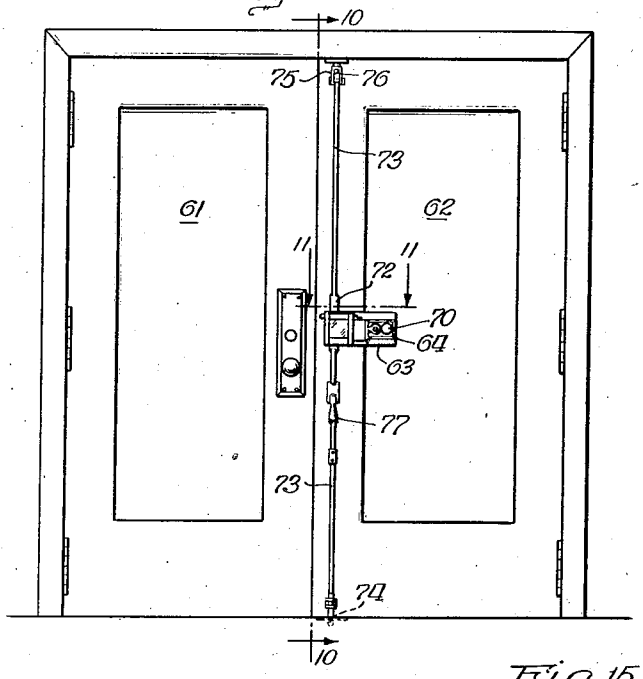

Fig. 10.

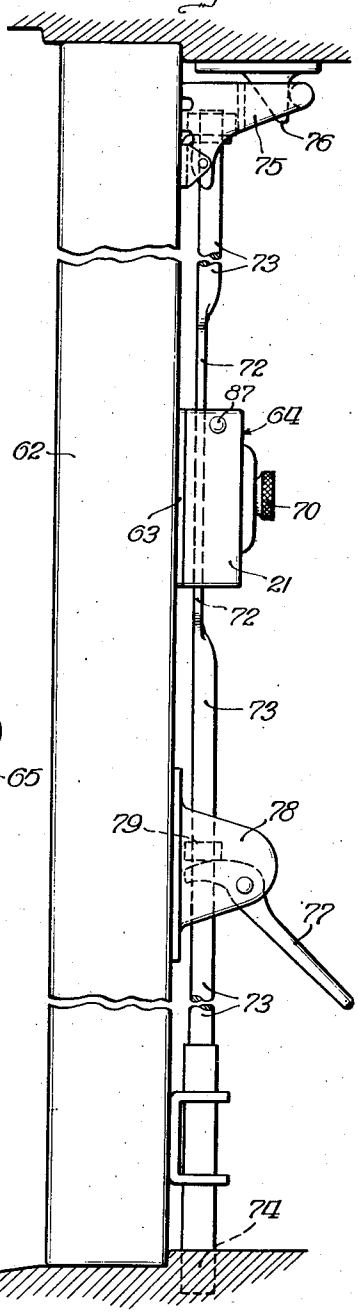

Fig. 14.

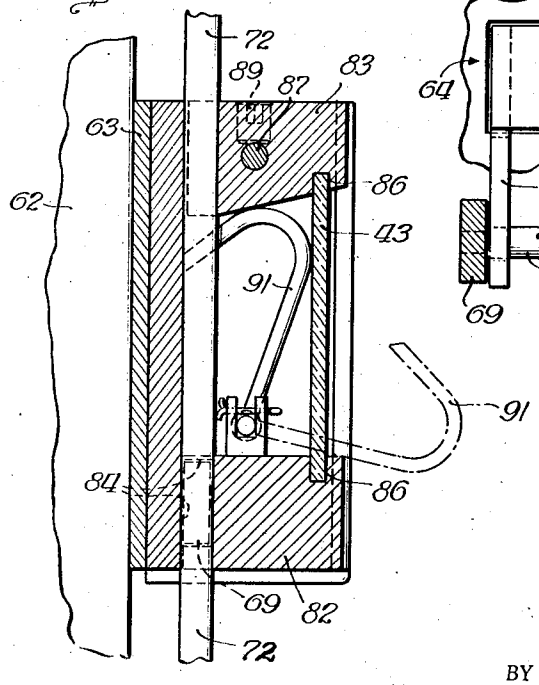

Fig. 15.

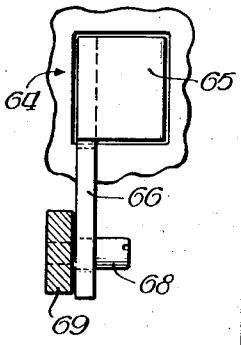

INVENTOR.
Max C. Kornrumpf
BY James J. O'Connell
Atty.

July 25, 1944. M. C. KORNRUMPF 2,354,321

EMERGENCY DOOR LOCK RELEASE

Filed Sept. 5, 1942 5 Sheets-Sheet 5

Fig. 11.

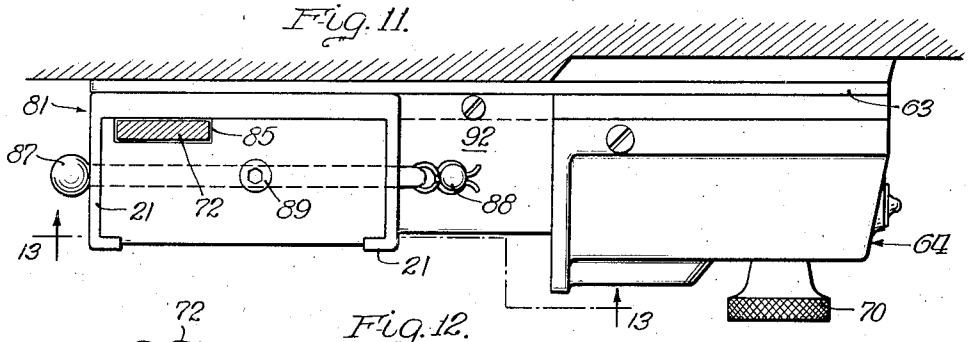

Fig. 12.

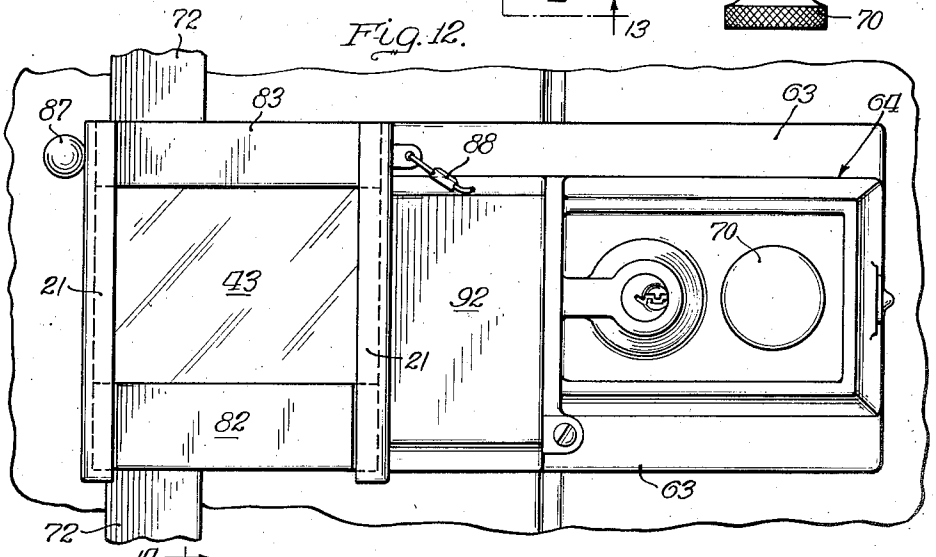

Fig. 13.

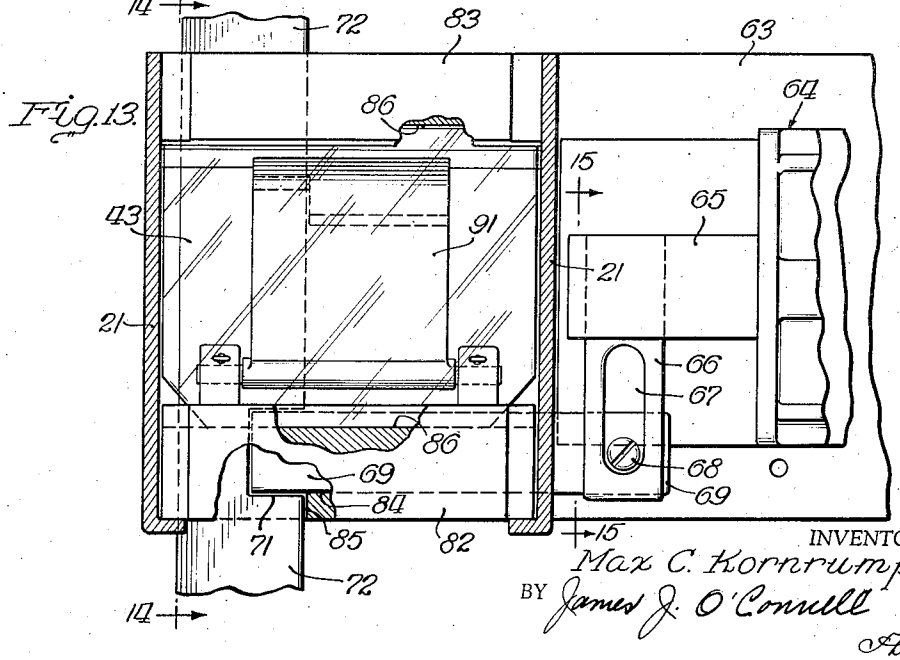

INVENTOR.
Max C. Kornrumpf
BY James J. O'Connell
Atty.

Patented July 25, 1944 2,354,321

UNITED STATES PATENT OFFICE

2,354,321

EMERGENCY DOOR LOCK RELEASE

Max C. Kornrumpf, Chicago, Ill.

Application September 5, 1942, Serial No. 457,399

12 Claims. (Cl. 70—465)

This invention relates in general to door locks and has more particular reference to the provision of an emergency door lock release.

A principal object of the invention is the provision of a door lock releasing means which is simple in construction, economical to manufacture, and which may be readily applied to the conventional type of door lock.

An important object of the invention is the provision of a door lock releasing mechanism adapted to be used in an emergency by any person desiring to do so, and which would normally prevent the opening of the door without the use of a key.

A further object of the invention is the provision of means for normally preventing the removal of a door lock latch bolt from its keeper by the turning of the door knob or depression of the finger latch, but allowing the removal of the said latch bolt by the operation of the usual cylinder lock by a key.

An important object of the invention is to permit a ready exit from a building in case of emergency but to normally prevent the use of the door as a means of ingress and egress except by authorized persons through the use of a key.

Another important object of the invention is the provision of a frangible emergency door lock releasing means which may be readily and economically replaced after use to prevent the normal use of the door as a means of ingress and egress.

In the drawings:

Figure 1 is a side view of a door lock and emergency lock releasing means in assembled relation;

Figure 2 is a front view of the apparatus shown in Fig. 1 and showing in addition a striking object for the releasing means;

Figure 3 is a view similar to Fig. 2 with the escutcheon plate and door knob removed and showing details of the emergency release means;

Figure 4 is a plan view of Fig. 3;

Figure 5 is a view taken along the line 5—5 of Fig. 3, looking in the direction of the arrows;

Figure 6 is a view taken along the line 6—6 of Fig. 3, looking in the direction of the arrows;

Figure 7 is a front view of a door lock and a modified form of the emergency lock releasing means operative in conjunction with the store door type lock having a thumb piece;

Figure 8 is an enlarged view taken along the line 8—8 of Fig. 7, looking in the direction of the arrows;

Figure 9 is a front view of a panic door and a modified form of the emergency lock releasing means operative in conjunction with the normally inactive portion of the panic door;

Figure 10 is an enlarged view taken along the line 10—10 of Fig. 9, looking in the direction of the arrows;

Figure 11 is an enlarged plan view taken along the line 11—11 of Fig. 9, looking in the direction of the arrows;

Figure 12 is an enlarged front view of the lock shown in Fig. 9;

Figure 13 is a slightly enlarged view taken along the line 13—13 of Fig. 11, with certain parts removed or in section;

Figure 14 is a view taken along the line 14—14 of Fig. 13, looking in the direction of the arrows; and

Figure 15 is a view taken along the line 15—15 of Fig. 14, looking in the direction of the arrows.

The present invention is particularly adapted for use in the outer exit doors of buildings in which it is customary for large groups of persons to assemble, such as factories, where it is necessary or desirable that all or certain exit doors be normally maintained in a locked condition both from the inside and outside. Keys may be possessed, of course, only by a limited number of authorized persons, so it is necessary that some means be provided which will allow the exit doors to be readily opened during times of emergency without the use of a key.

The present invention is shown in Figs. 1 to 6 as applied to the conventional mortise type of cylinder lock indicated generally at 10 which is housed in the usual lock case 11 mounted in the door 12. The lock 10 is normally maintained in an operative or door-locking condition by engagement of spring latch bolt 13 with mortised strike plate 14, and may be released by insertion of the usual key into the cylinder 15. Rotation of the key in the cylinder causes retraction of the spring latch bolt 13 into the lock case 11 in the usual manner allowing the door to be opened.

Viewing Fig. 1, it will be noted that an elongated backing plate 16 is provided on the face of the door 12 and is secured thereto by means of screws 19 (Fig. 2). To the upper extremity of the baking plate 16 immediately above and adjacent an escutcheon plate 17 there is secured by means of screws 18 (Fig. 3) a pair of vertical guide members indicated generally at 21. Each guide member is provided with a base portion 22 and side and front portions 23 and 24, respectively. A lower transverse cross bar 25 is removably secured to the lower extremity of the guide mem-

bers 21 by means of screws 26 and is provided with a groove 27 (Fig. 6).

A similar upper transverse bar 28 is also provided which has an oppositely disposed groove 29 (Fig. 6) cut therein. The bar 28 is secured by any suitable means, such as screws 30, to the upper extremity of a lock plate 31 (Fig. 3), the upper narrow portion 32 of which is disposed between the base portions 22 of the guide members 21. The upper transverse bar 28 and lock plate 31 are allowed limited vertical movement in the guide members 21. The lower portion 33 of the lock plate 31 is relatively wider than the upper portion and has cut therein two elongated apertures 34 and 35 through which extend the inner cylinder 15 and a split spindle 36, respectively, upon which the usual inner and outer door knobs 37 are secured. The spindle section to which the inner door knob 37 is secured is rotatable while the other section is stationary. It will be understood, however, that either or both sections of the spindle may be rotatable and that the instant invention is not to be limited to the inner or outer manipulative means for opening the door.

Viewing Fig. 3, there will be noted a circular disk 38 having a square aperture 39 cut in the center thereof for mounting on the rotatable section of the spindle 36 and to prevent relative movement therebetween. The disk 38 has a key way 41 formed in the outer periphery thereof into which a key 42 formed in the lock plate 31 is adapted to extend. It will be apparent that as long as the key 42 of the lock plate 31 is maintained in the key way 41 of the circular disk 38, the rotatable section of the spindle 36 cannot be moved relative to the circular disk 38 and thus will be prevented from being rotated by the inner door knob 37 to retract the spring latch bolt 13 and open the door 12.

The latch bolt 13, however, is retractable independently of the turning of the inner door knob 37 and spindle 38 by use of the usual key which is inserted into the cylinder 15 and rotated therein. As earlier mentioned, however, keys are in possession of only a few authorized persons, and means had to be provided for allowing the door to be opened in case of emergency by the mere turning of the inner knob 37. Therefore, means are provided for causing the disengagement of the key 42 from the key way 41 to allow the rotatable section of the spindle 36 to be rotated by the inner knob 37 to retract the latch bolt 13 and open the door without the use of a key.

As earlier described, the upper transverse bar 28 and lock plate 31 to which it is secured are allowed limited vertical movement governed by the length of the elongated apertures 34, 35, sufficient to cause removal of the key 42 from the key way 41. The bar 28 and lock plate 31 are maintained in raised position by means of a section of glass, or other frangible material, 43, (shown in Figs. 2, 3 and 6) upon which is inscribed suitable instructions for unlocking the door. The glass 43 is disposed within the grooves 27 and 29 and normally supports the plate 31 in its elevated, locking position. Breaking of the glass, however, in times of emergency, will remove such support and the plate 31 and bar 28 will drop of their own weight thus freeing the spindle 36 and disk 38 from the restraint of the key 42 allowing the door to be opened by rotation of the inner knob 37. To break the glass, a striking object 44 (Fig. 2) is provided for convenient access on a spring clamp 45 adjacent the glass and may be anchored to the door or lock in any convenient manner.

To again reset the lock, when the emergency is over, it is merely necessary to remove the lower transverse bar 25 by taking out the screws 26, and insert a new section of glass 43 into grooves 29 and 27 and properly position and secure the transverse bar 25 within the guide members 21. In such position the key 42 is again in engagement with the key way 41 of the circular disk 38 and the spindle cannot be turned by the door knob 37 to retract the latch bolt 13 into the lock case 11, thus preventing the door 12 from being opened, except through use of a key.

Referring to Figs. 7 and 8 there will be noted an application of the instant invention to the store front type door lock in which a thumb piece 51 is utilized to cause retraction of the latch bolt 13 into the lock case 11. In conjunction with this type door lock, a handle 52, instead of a door knob, is mounted on the escutcheon plate 17 for convenience in opening and closing the door 12. The thumb piece 51 is pivoted at 53 (Fig. 8) and is provided with an extension 54 which extends through an opening 55 in the escutcheon plate 17 and backing plate 16 for engagement with the bolt retractor 56 in the usual manner.

Normally, pivotal movement of the thumb piece 51 in a counter-clockwise direction, viewing Fig. 8, results in vertical movement of bolt retractor 56 and retraction of latch bolt 13 into lock case 11. In the instant invention, however, there is provided means for preventing pivotal movement of thumb piece 51 and engagement of extension 54 with bolt retractor 56, thus preventing retraction of the latch bolt 13 and opening of the door 12. This means comprises a movable plate 57 (Fig. 7) which is securely fastened at its upper extremity to the lower transverse bar 25'. At its lower end the plate 57 is offset horizontally and has a vertical engaging portion 58 (Fig. 8) in contact with the upper surface of the extension 54. The transverse bar 25' is slidably mounted in the vertical guide members 21 and is provided with a groove 27 within which is disposed a section of glass, or other frangible material, 43. The opposite edge of the frangible material 43 is disposed in the groove 29 of the upper transverse bar 28' which is removably secured in any suitable manner to the guide members 21.

The movable plate 57 is provided with an elongated aperture 34' through which extends the cylinder 15. The lower end of the plate 57 is disposed between guides 59 which are secured to the backing plate 16 to prevent lateral displacement of the plate 57 and to insure free sliding movement of the lower transverse bar 25' in the guide members 21, as will be later described.

When the glass, or other frangible material, 43 is in position, as shown in Figs. 7 and 8, it will be apparent that pressure on the thumb piece 51 will not accomplish vertical movement of the bolt retractor 56 to retract the latch bolt 13 into the lock case 11. This for the reason that the vertical lower extremity 58 of the movable plate 57 is in engagement with the upper surface of the thumb piece extension 54 and the plate 57 is restrained from vertical movement by the section of glass 43. Therefore, the door 12 is maintained in a locked condition at all times to prevent ingress and egress except by authorized persons through the use of a key. The cylinder lock

is, of course, operative to cause retraction of the latch bolt 13 in the usual manner independently of the auxiliary locking means just described.

In case of emergency, however, the door may be readily opened by any person by breaking the glass 43, which will free the movable plate 57 from any restraint and allow it to be moved upwardly by pressure on the thumb piece 51. The extension 54 of the thumb piece is thus allowed to engage the bolt retractor 56 and cause retraction of the latch bolt 13, allowing the door 12 to be opened.

When the emergency is over, the above described emergency lock releasing means may again be set to maintain the door 12 in a locked condition by merely removing the screws, or other suitable fastening means, 26 which will allow the upper transverse bar 28' to be removed from the guide members 21. A new section of glass, or other frangible material, is then placed in the groove 27 of the lower transverse bar 25' and the upper bar re-inserted in the guide members and the screws tightened. In the assembled relation of the parts, as shown in Figs. 7 and 8, pivotal movement of the thumb piece 51 is restrained from actuating the bolt retractor 56 and thus opening of the door 12 is prevented, except through use of a key.

Figures 9 to 15, inclusive, illustrate an application of the lock releasing means to the panic door type of exit which comprises a normally active door 61 and a normally inactive door 62. The active door 61 may be used in the normal manner as a means of ingress and egress by any person possessing a key, but the inactive door is normally maintained in a locked condition and may be opened through use of a key only when it is desirable that the whole door opening be used as a means of exit, or without a key during times of emergency, as will be presently explained.

Securely fastened to the inactive door 62 is a plate 63 upon which is mounted a conventional cylinder rim dead-latch lock indicated generally at 64. To the usual retractable bolt of the lock 64 there has been added an extension 65 (Fig. 13) to which a vertical connecting member 66 is secured. The member 66 is provided with an elongated slot 67 within which is disposed a screw 68 threaded into a lock member 69 (Fig. 15). From the above construction it will be apparent that turning of a knob 70 will cause retraction of the member 65 and through the vertical member 66 and screw 68 the lock member 69 will be moved to the right, viewing Fig. 13. The free end of the lock member 69 extends into a notch 71 formed in a flat portion 72 of a vertically movable release rod 73. The rod 73 is normally in the door locking position of Fig. 10 but is movable vertically as will presently be explained to disengage its lower extremity 74 from a hole in the flooring adjacent the door and at its upper extremity to cause release of the usual pivoted retainer member 75 from a stop 76. The means for elevating the rod 73 consists of a lever 77 pivoted on a bracket 78 fixed to the inactive door 62. One end of the lever 77 is bifurcated for engagement with a collar 79 securely fastened to the rod 73. Pivotal movement of the lever 77 in a clockwise direction, viewing Fig. 10, will cause elevation of the release rod 73, freeing the lower extremity thereof from the hole in the flooring and releasing the usual restraining member 75 at the top of the door 62 from engagement with the stop 76.

Means are provided for normally preventing opening of the inactive door 62 by operation of the lever 77 except in case of emergency. The door 62 may be opened, however, by use of a key, which allows the knob 70 to be turned to retract the lock member 69. As earlier mentioned the panic door type of exit comprises an active door and an inactive door. The active door may be opened through use of a key in the normal manner independently of the inactive door but when it is desired that the whole exit be used, opening of the inactive door will cause the active door to open simultaneously.

Mounted on the plate 63 adjacent the lock 64 is a retainer member indicated generally at 81 (Fig. 11) and having a pair of vertical guide members 21 within which are disposed lower and upper cross bars 82 and 83, respectively. The lower cross bar 82 has a horizontal groove 84 (Fig. 14) cut therein within which is disposed the lock member 69. Both cross bars 82 and 83 have a cut-out portion 85 (Figs. 11 and 13), within which is disposed for vertical sliding movement the flat portion 72 of the rod 73. Retraction of the lock member 69 to the right, viewing Fig. 13, by turning of the knob 70 of the lock 64, after unlocking by a key, will free the rod 73 from the lock member 69 and allow the rod 73 to be moved vertically by the lever 77 independently of the lock member 69 and the cross bars 82 and 83 to allow simultaneous opening of both exit doors.

As earlier mentioned, the door 62 cannot be opened without the use of a key, except in case of emergency. The means for normally maintaining the door 62 in a locked condition except in case of emergency comprises a frangible element 43 which is fitted into grooves 86 (Fig. 14) formed in the cross bars 82 and 83. The upper cross bar 83 is stationarily maintained with respect to the retainer member 81 by means of a pin 87 which extends through the guide members 21 and upper cross bar 83 and has a seal 88 attached to one end thereof. An inverted hexagon headless screw 89 is inserted into the upper cross bar 83 for engagement with the pin 87 (Fig. 14) to prevent its removal by an unauthorized person. As long as the glass or frangible element 43 remains unbroken and the lock member 69 is disposed in the notch 71, pressure on the lever 77 will not result in vertical movement of the rod 73 to open the door 62. In case of emergency, however, the glass or other frangible element 43 is adapted to be broken and no resistance is thereafter offered to the elevation of the rod 73 and cross bar 82 when the lever 77 is depressed. Vertical movement of the rod 73 and cross bar 82 is limited by the length of the slot 67 and is sufficient to cause release of the lower extremity 74 from the hole in the flooring and release of the retainer member 75 from the stop 76.

A curved metal piece 91 is provided which is pivoted in any suitable manner to the upper surface of lower cross bar 82 and is adapted when maintained in upright position by the unbroken glass or frangible material 43, to abut against the lower angular surface of the upper cross bar 83 so that if unusual pressure is put upon the lever 77, the glass or frangible material 43 will not be broken. In other words, the pressure is absorbed by the upper cross bar 83, rather than by the frangible material 43.

To prevent tampering with the emergency lock releasing mechanism a cover 92 is provided be-

tween the lock 64 and retainer member 81 to conceal the operating bolt members.

To recondition the lock releasing mechanism for future operation after the emergency is over, it is merely necessary to break the seal 88, loosen the special screw 89 with a special screw driver provided for that purpose and remove the pin 87. Removal of the pin 87 allows the upper cross bar 83 to be withdrawn from the retainer member 81 to allow a new glass or frangible material 43 to be placed within the guide members 21. Thereafter the upper cross bar 83 is replaced in the holder, the pin 87 reinserted, the special screw 89 tightened and the seal 88 replaced. The panic door 62 cannot thereafter be opened except by use of a key possessed by a comparatively few authorized persons, or except in case of emergency, as just described.

It is thought that the invention and its attendant advantages will be understood from the foregoing description, and it will be apparent that various changes may be made in the form, construction and arrangement of the parts without departing from the spirit and scope of the invention or sacrificing all of its material advantages, the form hereinbefore described and illustrated in the drawings being merely a preferred embodiment thereof.

I claim:

1. A door lock, comprising a bolt-operating spindle, a movable lock plate, means forming a part of said lock plate for preventing operation of said spindle, a breakable support member normally maintaining said preventing means in effective position and adapted, when broken, to release said lock plate and said spindle for operation to open the door.

2. In a door lock, a slidable bar having a retainer member secured to one end thereof, frangible means replaceably mounted in said retainer member, and means formed on the opposite end of said slidable bar for normally preventing the opening of a door except by use of a key.

3. In a door lock, a lock case, a latch bolt reciprocably mounted therein, a spindle comprising stationary and rotatable sections passing transversely through said door, inner and outer door knobs secured to the rotatable and stationary sections of the spindle, a disk mounted on the rotatable section of said spindle and having a key way formed in the outer periphery thereof, a lock plate having a plurality of apertures therein, a key formed on said lock plate adapted for engagement with said key way to prevent operation of the rotatable section of said spindle, and breakable means for causing release of said key from said key way to allow operation of said rotatable spindle and retraction of said latch bolt.

4. A door lock releasing means comprising a retractable latch bolt, means for retracting said latch bolt, a thumb piece for operating said retracting means, and means including a frangible element for blocking manipulation of said thumb piece, said frangible element being adapted when broken to release said thumb piece whereby it is rendered manipulative to operate said retracting means.

5. A door lock releasing means comprising a lock case, a bolt slidably mounted therein, a pivoted thumb piece for causing retraction of the bolt into the lock case, means for releasably dogging said thumb piece to prevent operation thereof, the said dogging means including a frangible element adapted to be broken to release said thumb piece whereby it may be moved to retract said bolt to open the door.

6. In a door lock, a movable member having a support secured to the upper end thereof and means formed integrally therewith at the lower end for engagement with a thumb piece, and a frangible element disposed within said support to stationarily maintain the said movable member in engagement with said thumb piece to prevent movement thereof, while allowing the door to be opened by use of a key.

7. In a door lock, a retractable latch bolt, key-operated means for retracting said latch bolt, an additional latch bolt retractor, a thumb piece for operating said additional retractor, a movable plate normally maintaining said thumb piece in inoperative position, and a breakable element normally blocking movement of said movable plate.

8. In a door lock, a movable latch member, means for causing movement of said latch member to open the door, a frangible element normally blocking operation of said last named means and adapted to be broken to release said latch member for movement.

9. A door lock releasing means comprising a movable release rod, manipulative means for causing movement of said release rod to open the door, a slidable lock member normally in engagement with said release rod, a frangible element releasably blocking vertical movement of said release rod and said lock member and adapted to be broken to release the release rod and lock member for vertical movement.

10. An emergency release for door locks having in combination, a release rod for opening said door, manipulative means for operating said release rod, a slidable lock member for engagement with said release rod, means for causing lateral sliding movement of said lock member out of engagement with said release rod to permit movement of the latter, a frangible element for preventing movement of said release rod while said lock member is in engagement therewith adapted to be broken to allow movement of the release rod while the lock member is in engagement therewith.

11. In a door lock releasing means, a releasable latch bolt for normally maintaining the door in a closed condition, a laterally slidable lock member adapted for engagement with said latch bolt, a frangible element for normally preventing movement of said latch bolt while said slidable lock member is in engagement therewith, means for moving said slidable lock member laterally out of engagement with said latch bolt to permit movement thereof, the said frangible element being adapted to be broken to permit movement of said latch bolt to open the door, and means for relieving pressure from said frangible element if it is attempted to move said latch bolt while said frangible element is unbroken and said slidable lock member is in engagement with said latch bolt.

12. A door lock releasing means comprising a vertically movable latch bolt, manipulative means for causing movement of said latch bolt, a movable lock member in engagement with said latch bolt, means for causing lateral sliding movement of said lock member out of engagement with said latch bolt, frangible means for preventing movement of said latch bolt, and means for relieving said frangible element of stress if said manipulative means is attempted to be operated while said frangible element is unbroken.

MAX C. KORNRUMPF.