Aug. 29, 1939. S. B. ATWOOD 2,171,021

HINGE

Filed April 19, 1937

Fig. 1

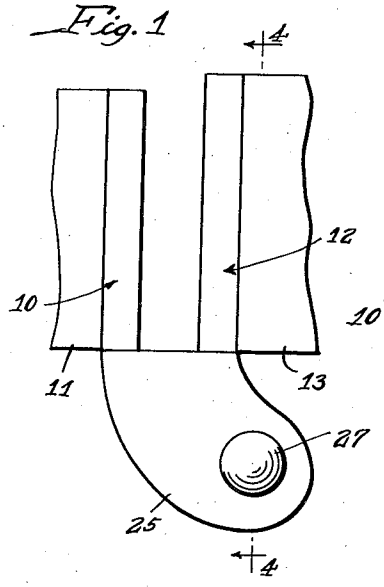

Fig. 5

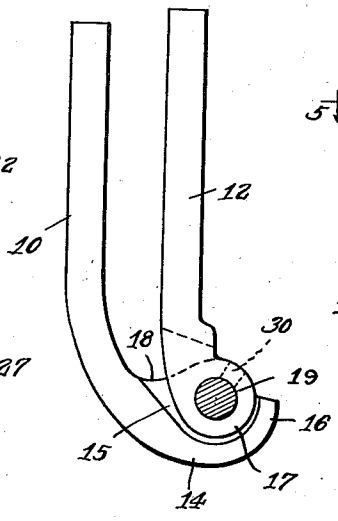

Fig. 2

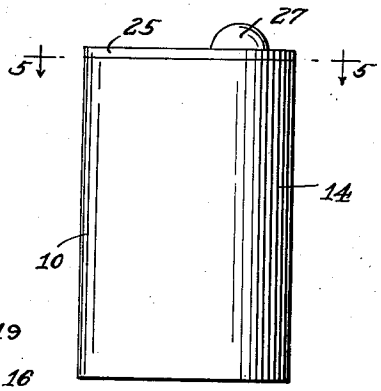

Fig. 3

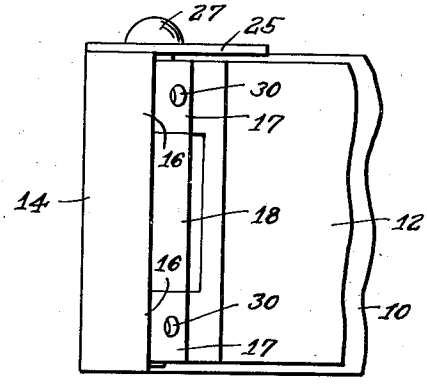

Fig. 4

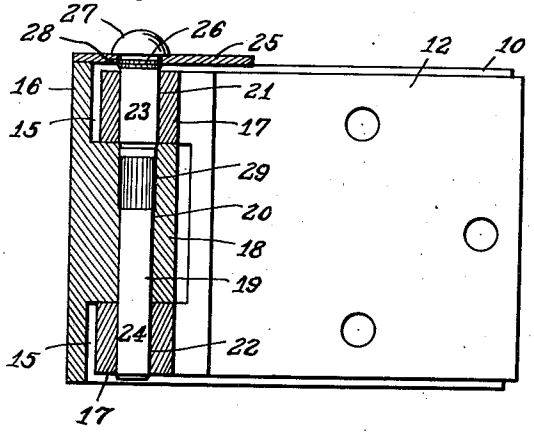

Fig. 6

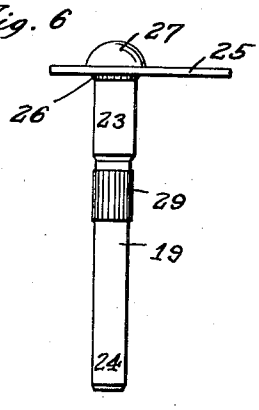

Inventor:
Seth B. Atwood

By
Wilson, Dowell, McCanna & Hintercorn
Attys.

Patented Aug. 29, 1939 2,171,021

UNITED STATES PATENT OFFICE

2,171,021

HINGE

Seth B. Atwood, Rockford, Ill.

Application April 19, 1937, Serial No. 137,699

4 Claims. (Cl. 16—148)

This invention relates to a new and improved hinge for use on the doors of motor vehicles.

There have been two important objections to exposed pintle type hinges on automobiles. One is that where the pintle head turned, the pintles could not be driven down all of the way because the finish subsequently applied would crack off around the pintle head. Thus, in either event, the tops of the hinges were unsightly. Another objection has been that the hinges tended to bind and work hard and showed effects of wear too soon and caused door rattles. It is therefore the principal object of my invention to provide a hinge constructed so that the pintle head does not turn and can therefore be driven down flush with the hinge top and will not damage the finish thereafter applied, the hinge being furthermore so designed and constructed to provide more widely spaced broad bearings and accordingly reduce the tendency for binding and make for easier operation and less wear and consequent door rattle.

The hinge of my invention has the outer member in the form of a blank cut from bar stock rolled to the desired cross-section, whereby to provide an enlarged end portion in which a hole may be provided for the hinge pintle and in which recesses may be milled to accommodate the knuckles of the inner hinge member, and a cover plate is secured to the upper edge of the blank by means of a pintle "staked" to the plate by a serrated or knurled portion next to the head and "staked" in a similar fashion to the outer hinge member in the pintle hole thereof, whereby to make the plate and pintle rigid with the hinge member for the purpose stated, the pintle providing smooth cylindrical shank portions at its upper and lower ends for reception in broad knuckles on the inner hinge member, whereby to provide the desired wide spacing of elongated bearings and result in an easier operating, longer lifed hinge, and one which is less apt to develop play and cause door rattling.

The inventin is illustrated in the accompanying drawing, in which—

Figs. 1 and 2 are a plan view and end view of a hinge made in accordance with my invention, the plan view including sectioned portions of the door and pillar;

Fig. 3 is a side view of the outer end of the hinge;

Fig. 4 is a longitudinal section in a vertical plane on the line 4—4 of Fig. 1;

Fig. 5 is a horizontal section on the line 5—5 of Fig. 2, and

Fig. 6 is a side view of the preliminary assembly of the pintle and plate.

The same reference numerals are applied to corresponding parts throughout the views.

The hinge comprises an outer hinge member 10 fastened by screws to the door 11 and an inner hinge member 12 similarly secured to the pillar 13. Both hinge members have the main body portion formed from a blank cut from bar stock rolled to the desired cross-section, the general shape in longitudinal cross-section of both hinge members being evident in Fig. 5. The outer hinge member 10 is milled out on the inner face thereof at the enlarged end 14 at the two points 15 to provide knuckle recesses, a circular milling tool peing used and sufficient stock being left at the end of the milling operation to provide a cover wall 16 for each of the recesses. The recesses are of sufficiently larger radius than the enlarged end of the inner hinge member 12 to afford ample operating clearance when the knuckles 17 of the inner hinge member are received in the recesses 15 and connected with the middle knuckle 18.

The pintle 19 has a drive fit in the hole 20 in knuckle 18 and a close working fit in registering holes 21 and 22 in the upper and lower knuckles 17, thereby providing the desired wide spacing of bearings, while at the same time obtaining the desired length of bearings. In other hinges it has been the practice to have the pintle entered with a drive fit in the knuckles 17 and have a working fit in the knuckle 18, but that construction I have found gave rise to the objections mentioned before, and furthermore, invariably results in too much wear on the parts so that play develops and the doors rattle. Obviously, therefore, the unit bearing pressure with such a construction is too high. I have found that by reversing the arrangement, as just described, and having the pintle 19 fixed to the outer hinge member 10 with the knuckles 17 of the inner hinge member 12 bearing on the upper and lower ends 23 and 24 of the pintle, the objections caused by a rotating pintle head are avoided and the unit bearing pressure is lowered to such an extent by reason of the wide spacing of the bearings 23 and 24 that wear is greatly reduced and the hinge not only works more easily and quietly, but has a greatly increased life.

With this type of hinge, a top flange or cover plate 25 is required to cover the projecting portions of the hinge members for protection against dirt and water, as well as to have neat appearance. This plate excludes dirt and water from the pintle

bearings, thereby assuring easier operation. In winter-time where the presence of water might mean freezing together of the hinge members, the importance of having this protecting cover plate is still more evident. In accordance with my invention, the plate **25** is fastened in place by the pintle head, the pintles in the hinges of my invention being arranged to be driven all the way home. A short serrated or knurled portion **26** is provided on the pintle next to the head **27** and is used to "stake" the plate to the pintle in a preliminary assembly in the manner shown in Fig. 6, wherein the pintle is shown pressed into the hole **28** in the plate. The grooves cut in the hole **28** by the serrated portion **26** are sufficient to anchor the plate and prevent its turning relative to the pintle. The other longer serrated or knurled portion **29** on the pintle **19** below the smooth cylindrical bearing portion **23** cuts similar grooves in the hole **20** when the pintle is driven home, as illustrated in Fig. 4, whereby to prevent the pintle from turning in the knuckle **18** of the outer hinge member **10**. It follows therefore that the plate **25** will likewise be held firmly in assembled relation to the outer hinge member, and there is therefore no necessity for welding or otherwise securing the plate on the hinge member. The plate seats squarely on the outer hinge member because it has abutment therewith on diametrically opposite sides of the inner hinge member, as should be clear from a comparison of Figs. 1 and 5. The plate **25** is assembled on the hinge member with the burr or feather edge produced in the punching of the plate extending downwardly. Then when the pintle is driven in place, this downwardly projecting burr on the plate draws up tightly on top of the hinge member and conforms itself thereto, thus eliminating any danger of a poor joint line. With this construction, there is also the advantage that the upper edge of the cover plate is not sharp but slightly rounded, that edge being the reverse of the burred edge in the original punching. In passing, it must be evident that the outside diameters of the portions **26**, **23**, **29**, and **24** decrease in the order named, the reason being that the smooth cylindrical portion **24** must pass freely through the hole **20** wherein the serrated portion **29** is to have a press fit, the serrated portion **29** must pass freely through the pintle hole **21** wherein the portion **23** is to have a close working fit, and the portion **23** must pass freely through the hole **28** in which the portion **26** is to have a press fit. The pintle hole **21** in the upper knuckle **17** is accordingly made slightly larger than the pintle hole **22** in the lower knuckle **17**. The hinge is oiled through holes **30**.

It is apparent from the foregoing description that I have provided a hinge which avoids the objections present in hinges as heretofore made. The present hinge is of neat and attractive appearance and may be produced economically. The cover plate thereon protects the hinge from the weather and adds a great deal to its good appearance by making the top flush and concealing the gap between the hinge member. The pintle clamps the cover plate in position with its head, and the head cannot turn and cause damage to the finish applied to the tops of the hinges. The pintle also provides widely spaced broad bearings for the inner hinge member with resultant advantages. There is obviously an appreciable saving in cost of production realized by the elimination of a welding operation by having the pintle fasten the plate in position. This method of fastening also has the advantage that the enamel or other finish spreads evenly over the joint and there is no tendency to crack or peel.

It is believed the foregoing description conveys a good understanding of the objects and advantages of my invention. The appended claims have been drawn with a view to covering all legitimate modifications and adaptations.

I claim:

1. In a covered joint hinge comprising outer and inner hinge members, the outer member having spaced top and bottom recesses provided on its outer end behind an outer cover wall, and a knuckle therebetween with a pintle hole provided therein, and the inner member having spaced top and bottom knuckles to work in said recesses above and below said first knuckle with pintle holes provided therein registering with the hole in the first knuckle, a separate cover plate for the top of the outer member also having a pintle hole provided therein, said plate being adapted to project over the upper knuckle of the inner hinge member in spaced relation thereto and be supported by its marginal portion on top of said cover wall, and a headed pintle pressed into the pintle hole in said cover plate down to the head and having a working fit in the holes in the upper and lower knuckles of said inner member and a drive fit in the hole in the knuckle on the outer member, said pintle being arranged when driven home in the outer member to have the head thereof force the marginal portion of the cover plate downwardly on top of the outer member to hold the plate in position thereon.

2. In a covered joint hinge comprising outer and inner hinge members, the outer member having spaced top and bottom recesses provided on its outer end behind an outer cover wall, and a knuckle therebetween with a pintle hole provided therein, and the inner member having spaced top and bottom knuckles to work in said recesses above and below said first knuckle with pintle holes provided therein registering with the hole in the first knuckle, the pintle hole in the upper knuckle being of enlarged diameter in relation to the hole in the lower knuckle, a separate cover plate for the top of the outer member having a pintle hole of still further enlarged diameter, said plate being adapted to project over the upper knuckle of the inner hinge member in spaced relation thereto and be supported by its marginal portion on top of said cover wall, and a headed pintle having a lower end portion of small diameter and an upper end portion of large diameter adapted to enter the holes in said lower and upper knuckles, respectively, with a working fit, and having an intermediate portion of a medium size making a drive fit in the hole in the knuckle on the outer member, and another portion of largest diameter under the head and above the inner member pressed in the cover plate hole, said pintle being arranged when driven home in the outer member to have the head thereof force the marginal portion of the cover plate downwardly on top of the outer member to hold the plate in position thereon.

3. As an article of manufacture, a pintle and cover plate sub-assembly for application on the outer member of a covered joint hinge to hingedly connect an inner member thereto, comprising a headed pintle having a knurled shank portion under the head, and a cover plate having the knurled portion of said pintle shank pressed into a hole in said plate, said knurled portion being only long enough to hold said plate when pressed

therein, said plate adapted to fit on top of the outer member of the hinge and the pintle having a second knurled portion on the shank in longitudinally spaced relation to the first-mentioned knurled portion adapted to have a drive fit in the outer member.

4. A covered joint hinge comprising inner and outer hinge members having interfitting knuckles, the outer member having a cover portion, a headed pintle entered in registering holes in said knuckles, working freely in upper and lower knuckles of the inner member and non-rotatable in the intermediate knuckle of the outer member, and a cover plate supported on the cover portion on the outer member on diametrically opposite sides of the pintle and having the pintle entered non-rotatably in a hole provided therein, whereby said pintle, plate and outer hinge member form a rigid unitary assembly.

SETH B. ATWOOD.