July 12, 1932. R. HOEFERT ET AL 1,866,597

AUTOMATIC TELEPHONE SYSTEM

Filed Feb. 20, 1931 2 Sheets-Sheet 1

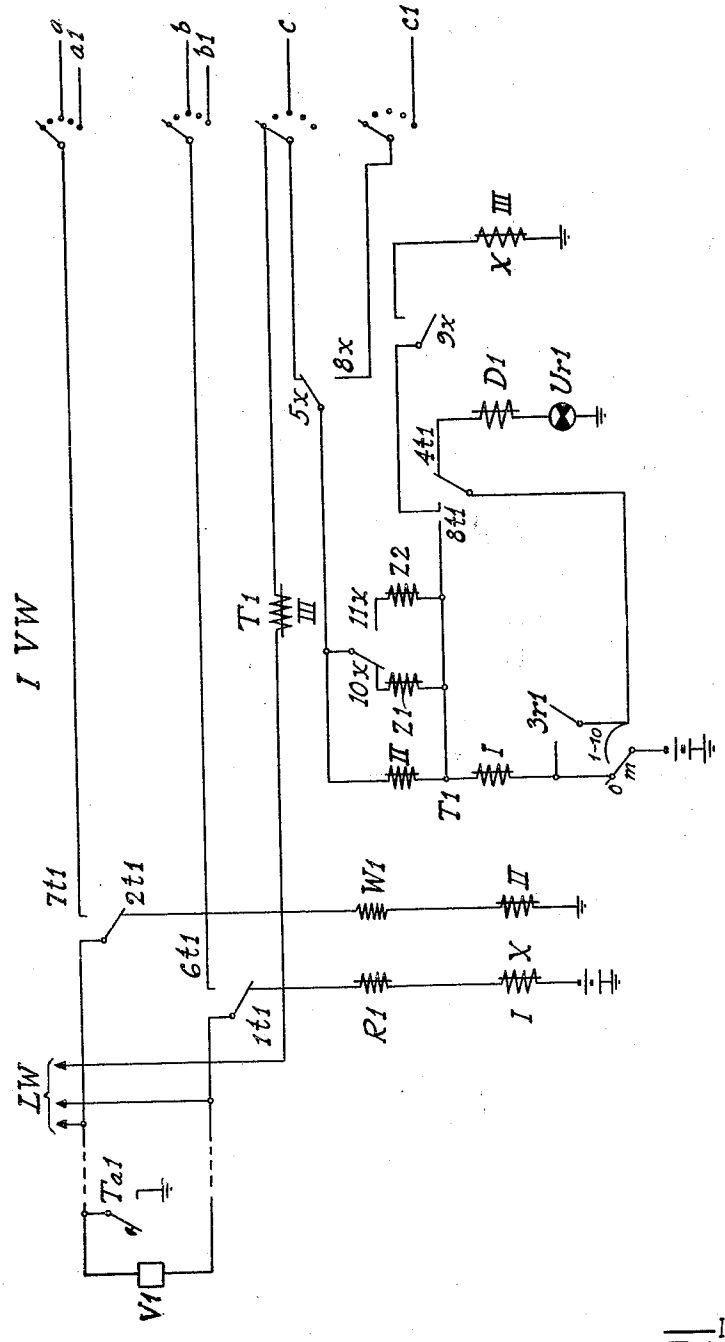

Fig. 1

Inventors
Reinhold Hoefert
Kurt Wollack
McWatters & Duval
Attorney

July 12, 1932. R. HOEFERT ET AL 1,866,597

AUTOMATIC TELEPHONE SYSTEM

Filed Feb. 20, 1931 2 Sheets-Sheet 2

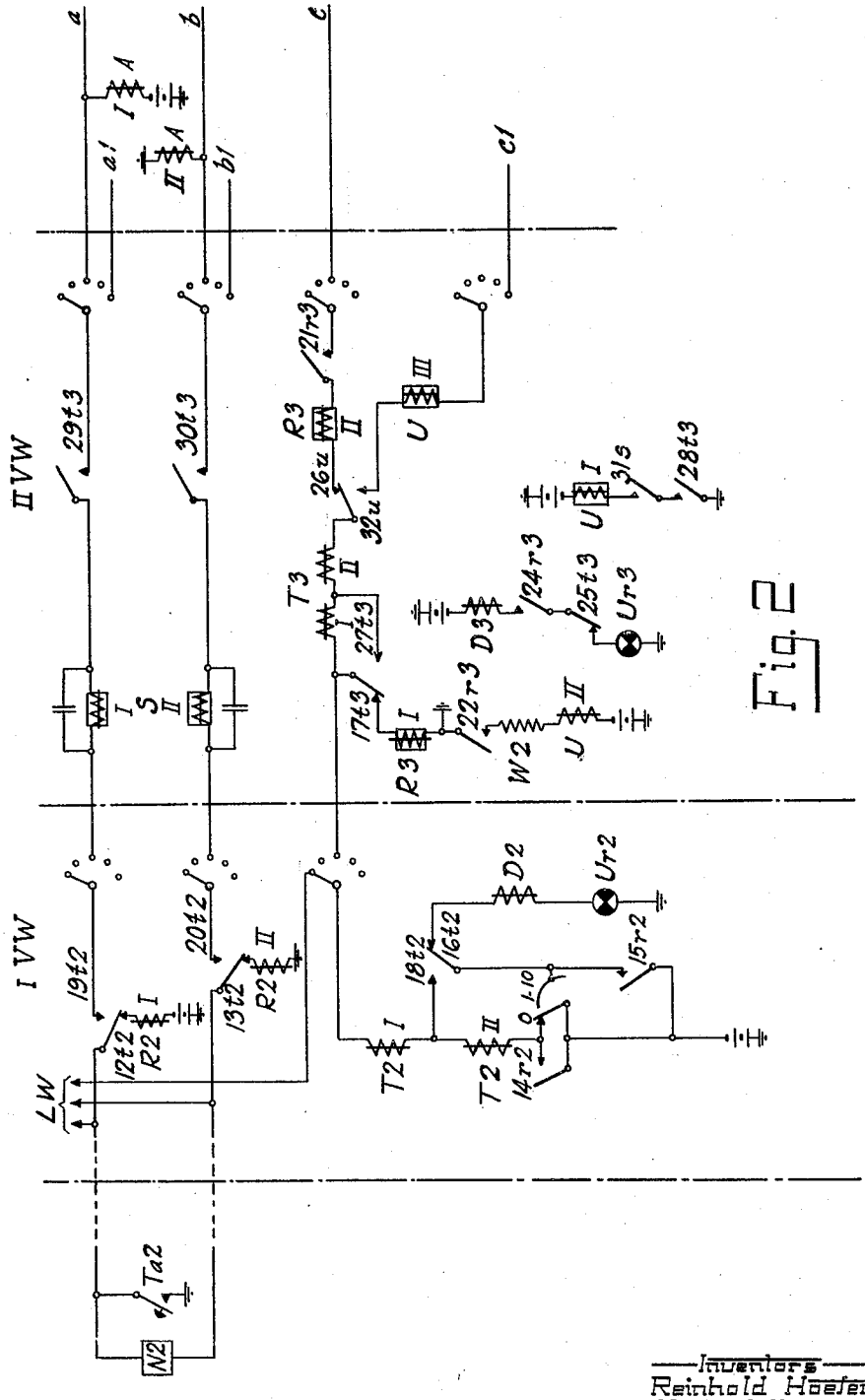

Fig. 2

Inventors
Reinhold Hoefert
Kurt Wollack
By Walter Orsow.
Attorney

Patented July 12, 1932 1,866,597

UNITED STATES PATENT OFFICE

REINHOLD HOEFERT, OF BERLIN-CHARLOTTENBURG, AND KURT WOLLACK, OF BERLIN, GERMANY, ASSIGNORS TO SIEMENS & HALSKE AKTIENGESELLSCHAFT, OF SIEMENSSTADT, NEAR BERLIN, GERMANY

AUTOMATIC TELEPHONE SYSTEM

Application filed February 20, 1931, Serial No. 517,292, and in Germany April 16, 1930.

The invention relates to a circuit arrangement for telephone systems with automatic operation, such systems in particular in which line groups of varying traffic direction are connected to the same connecting device.

There are already arrangements known which make it possible to reach line groups of various directions over switches with free hunting. In these devices a switching over is effected after the seizure of a line of a certain direction and a setting of a group selector over this line by a simultaneously connected auxiliary stepping switch, by which switching over the preceding free hunting switch is set to a line group of the desired direction.

The object of the present invention is the production of a circuit which shall be more simple and reliable, compared to known arrangements for the selection of a line of a certain traffic direction. This is achieved in that, by special procedures at the calling station, a free hunting switch, determining the traffic direction, is set on to a line of a certain traffic direction.

By the device according to the invention the difficulties experienced in the known arrangements are overcome, such difficulties arising when the connections effected, according to the various directions, are of a varying value, and metering of the connections, corresponding to this value, is to be made. The invention shows also a practical manner in which the solution of this problem can be made in that it provides a special metering device for each traffic direction which is connected up by the switching means, determining the direction.

Two embodiments of the invention are shown in the drawings: Figure 1 shows the manner in which the setting is effected by a first preselector on to a line of a certain traffic direction and Figure 2 the manner in which the switching procedures are effected by a second preselector. The arrangement, according to Figure 1, operates in the following manner.

When the subscriber N1 lifts his receiver the relay R1 is energized over: earth, battery, winding I of relay X, relay R1, contact $1t1$, subscriber's line loop, contact $2t1$, resistance W1, winding II of relay X, earth. Relay X is not energized in this circuit as it is constructed as a differential relay. Relay R1 closes its contact $3r1$ with the result that a circuit is closed for the rotary magnet D1 over: earth, battery, switch wiper m, contacts $3r1$, $4t1$, rotary magnet DI, interrupter $Ur1$, earth. The wipers of the preselector are then advanced until they have found a free succeeding switch. In this moment relay T1 is energized over: earth, battery, wiper m, contact $3r1$, windings I and II of relay T1, contact $5x$, c-wiper of the preselector, c-lead, earth on this lead in the succeeding switch. Relay T1 throws over its contacts $1t1$ and $2t1$ into the positions $6t1$ and $7t1$, by which the a— and b— leads are connected up to the succeeding switch. Further, it closes its double front contacts $8t1$ and thus breaks the circuit for the rotary magnet D1, with the consequence that the preselector is brought to rest and the subscriber is switched through in a certain traffic direction by the seizure of the outgoing a—b— and c— leads and is connected up, for example, to a group selector at his own exchange.

In addition, a circuit for the metering relay Z1 is closed over contact $10x$ as follows: earth, battery, wiper m, contact $8t1$, relay Z1, contacts $10x$, $5x$, c-wiper of the preselector, c-lead, earth to this lead in the succeeding switch, with the result that the metering of the conversation is prepared.

If the subscriber N1, however, wishes to establish a connection with another exchange, he operates a key $Ta1$ at his station in addition to lifting up his receiver, which results in the earthing of the a-lead. The same switching procedures for the starting of the preselector now take place, as were described in the above and effected by the energization of relay R1 but, in addition, however, relay X also is energized. This throws over its contact $5x$ into the position $8x$ so that relay T1 tests and is energized over the outgoing $c1$-lead in a disengaged condition of a succeeding switch, as described in the above, and results in the connecting up of the $a1$ and $b1$ leads by means of the contacts $6t1$

and 7t1 as well as the disconnection of the rotary magnet D1 by the contact 8t1. Relay X remains energized over its contact 9x in the following circuit: earth, battery, wiper m, contacts 8t1, 9x, winding III of relay X, earth.

In addition, relay X throws its contact 10x into the position 11x and thus closes a circuit for the metering relay Z2 of the meter to be operated for the setting up of a connection in the second traffic direction over: earth, battery, wiper m, contact 8t1, relay Z2, contacts 11x, 8x, c1-wiper of the preselector, c1-lead, earth, on this lead to the succeeding switch so that this conversation, according to its length, is measured by the meter influenced by relay Z2.

The release of the first preselector now follows upon the termination of the conversation in the ordinary manner.

The arrangement according to Figure 2 operates as follows:—When the subscriber N2 lifts his receiver relay R2 is energized over: earth, battery, winding I of relay R2, contact 12t2, subscriber's line loop, contact 13t2, winding II of relay R2, earth. Relay R2 closes its contacts 14r2 and 15r2 so that a circuit for the rotary magnet of the first preselector is closed over: earth, battery, contacts 15r2, 16t2, rotary magnet D2, interrupter Ur2 and earth and this is advanced until its wipers have reached a free succeeding second preselector, when relays T2 in the first preselector and R3 in the second preselector are energized over: earth, battery, contact 14r2, windings II and I of relay T2, c-wiper of the first preselector, c-lead, contact 17t3, winding I of relay R3, earth. Relay T2 throws over its contacts 16t2, 12t2, 13t2 into the positions 18t2, 19t2, and 20t2, with the consequence that the circuit for the rotary magnet D2 is broken and the first preselector is brought to rest. In addition, by the throwing over of contacts 12t2 and 13t2, the relay R2 releases and opens its contacts 14r2 and 15r2.

The contacts 21r3, 22r3 and 24r3 are closed in the second preselector by the energization of relay R3. Relay U cannot respond over contact 22r3, due to the resistance W2 but the rotary magnet D3, on the other hand, is energized over; earth, battery, magnet D3, contacts 24r3, 25t3, interrupter Ur3, earth, resulting in the second preselector being advanced until it has reached a free succeeding switch. In this moment relay T3 is energized over: earth, battery, contact 18t2 in the first preselector, winding I of relay T2, c-wiper of the first preselector windings I and II of relay T3 in the second preselector, contact 26u, winding II of relay R3, contact 21r3, c-wiper of the second preselector, c-lead, earth on this lead in the succeeding switch. By the energization of relay T3 contact 17t3 is thrown into the position 27t3 and the high resistance winding I of relay T3 then short-circuited with the result that the seized line is guarded against a repeated seizure in known manner. Additionally, the contact 28t3 is closed and 25t3 opened. By the latter switching procedure the circuit for the rotary magnet D3 is broken and the second preselector is brought to rest. Further, at the energization of relay T3 the contacts 29t3 and 30t3 are closed, so that the subscriber is connected up to a group selector in his own exchange.

Should he, however, require a connection in another traffic direction, e. g., to another exchange, he operates the key Ta2 at his station and causes thereby the earthing of the a-lead. Hereby the differential relay S is caused to operate over: earth, key Ta2, contact 19t2, a-wiper of the first preselector, winding I of relay S, contact 29t3, a-wiper of the second preselector, winding I of relay A in the succeeding switch, battery, earth, as its winding II is short-circuited by the pressing of the key. Relay S closes its contact 31s and thereby connects up relay U over: earth, battery, winding I of relay U, contacts 31s, 28t3 earth. Relay U throws over its contact 26u to the position 32u and by the breaking of the c-lead then causes the release of the succeeding group selector in known manner and also the release of the relay T3. Hereby the contacts 25t3 and 17t3 are reclosed. Relay R3 remains energized over contact 17t3 and the rotary magnet D3 is energized a fresh over contact 25t3, so that the second preselector is connected to the line group of the other traffic direction and hunts for a free line in this. Upon finding it, relay T3 is energized a fresh over: earth, battery, contact 18t2, winding I of relay T2, c-wiper of the first preselector, windings I and II of relay T3, contact 32u, winding III of relay U, c-wiper of the second preselector, c1-lead, earth to this lead in the succeeding switch. Relay T3 causes the return of its contact 17t3 to the position 27t3 and opens contact 25t3 by which the preselector is brought to rest. Contacts 29t3 and 30t3 are now closed again and hereby the connection to the group selector of the second exchange is established.

By the opening of contact 26u, the circuit also for relay R3 is broken so that contact 22r3 and the locking circuit for relay U also is opened. The last mentioned operation, however, only takes place after a fresh locking circuit for relay U has been closed over its winding III at the arrival of the c1-wiper to a free succeeding switch when relay R3 is released with slow action.

The release of the connection is then effected by the replacing of the receiver in known manner.

What is claimed is:

1. In a telephone system, a subscriber's line,

a lineswitch individual to said line, a first and a second group of trunks extending to different zones accessible to said switch, a device located at the subscriber's substation, means responsive to the removal of the receiver by the subscriber for causing said switch to automatically hunt for and seize a trunk in the first group, and means responsive to the operation of said device and the removal of the receiver by the subscriber for causing said switch to automatically hunt for and seize a trunk in the second group.

2. In a telephone system, a subscriber's line, a lineswitch individual to said line, a first and a second group of trunks accessible to said switch, a differential relay in said switch, a test circuit in said switch, a first test wiper in said switch normally connected to said test circuit and a second test wiper in the switch normally disconnected, a device located at the subscriber's substation, means responsive to the removal of the receiver by the subscriber for operating said first test wiper to find a trunk in the first group and connect the subscriber's line thereto, means responsive to the operation of said device and the removal of the receiver by the subscriber for operating said differential relay to disconnect the first test wiper from the test circuit and to connect the second test wiper to the test circuit, and for operating the second test wiper to find a trunk in the second group and connect the subscriber's line thereto.

3. In a telephone system, a subscriber's line, a lineswitch individual to said line, a first and a second group of trunks accessible to said switch, a differential relay in said switch, a test circuit in said switch, a first test wiper in said switch normally connected to said test circuit and a second test wiper in the switch normally disconnected, a device located at the subscriber's substation, means responsive to the removal of the receiver by the subscriber for operating said first test wiper to find a trunk in the first group and connect the subscriber's line thereto, means responsive to the operation of said device and the removal of the receiver by the subscriber for operating said differential relay to disconnect the first test wiper from the test circuit and to connect the second test wiper to the test circuit, and for operating the second test wiper to find a trunk in the second group and connect the subscriber's line thereto, a first meter relay in said switch for determining the charge for connections over the first group of trunks, a second meter relay in said switch for determining the charge for connections over the second group of trunks, and means controlled by said differential relay for connecting the meter relay corresponding to the trunk line taken into use.

4. In a telephone system, a subscriber's line, a line switch individual to said line, a first and a second group of trunks extending to different traffic areas, a first meter relay in said switch for determining the charges for connections set up over the first group of trunks, a second meter relay in said switch for determining the charges for connections set up over the second group of trunks, a device located at the subscriber's substation, means responsive to the removal of the receiver by the subscriber for operating said switch to select a trunk in the first group and for preparing said first meter relay for operation, and means responsive to the operation of said device and the removal of the receiver by the subscriber for operating said switch to select a trunk in the second group and for preparing said second meter relay for operation.

5. In a telephone system, a subscriber's line, a primary lineswitch individual to said line, a plurality of secondary lineswitches accessible to said primary lineswitch, a first and a second group of trunks accessible to said secondary lineswitches extending to different traffic areas, a device located at the subscriber's substation, means responsive to the removal of the receiver by the subscriber for operating said primary lineswitch to select an idle one of said secondary lineswitches, means responsive thereto for automatically operating the selected secondary lineswitch to select a trunk in the first group, and means in said secondary lineswitch responsive to the operation of said device by the subscriber for automatically reoperating said secondary lineswitch to select a trunk in the second group.

6. In a telephone system, a subscriber's line, a first and a second group of trunks extending to different traffic areas, a first and a second metering device individual to said line, a device located at the subscriber's station, and means for selecting a trunk in the first group and for preparing said first metering device for operation in response to only the removal of the receiver by the subscriber or for selecting a trunk in the second group and for preparing said second metering device for operation in response to the removal of the receiver by the subscriber only in case said device at the subscriber's station is operated.

In witness whereof, I hereunto subscribe my name this 27th day of January, A. D. 1931.

REINHOLD HOEFERT.

In witness whereof, I hereunto subscribe my name this 27th day of January, A. D. 1931.

KURT WOLLACK.