March 27, 1928. 1,664,250

T. M. EYNON

VARIABLE RESISTANCE INDICATOR

Filed Aug. 10, 1922

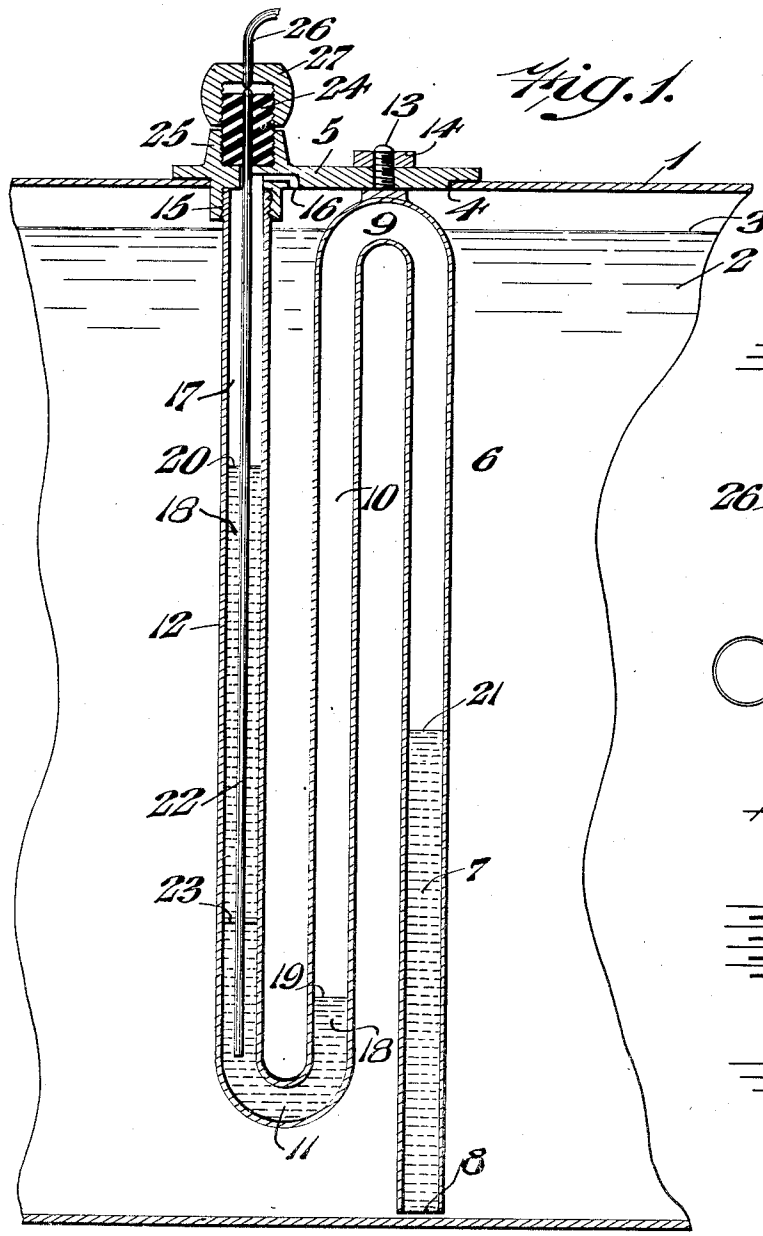

Fig. 1.

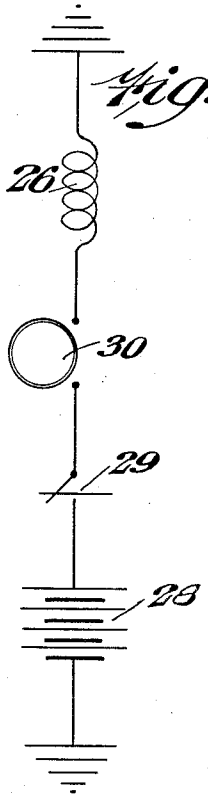

Fig. 3.

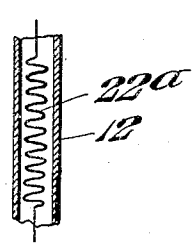

Fig. 2.

INVENTOR:
Thomas M. Eynon.
BY
Niedersheim & Fairbanks.
ATTORNEYS.

Patented Mar. 27, 1928. 1,664,250

UNITED STATES PATENT OFFICE.

THOMAS M. EYNON, OF PHILADELPHIA, PENNSYLVANIA.

VARIABLE RESISTANCE INDICATOR.

Application filed August 10, 1922. Serial No. 580,987.

My invention consists of a novel construction of a variable resistance indicator, which will function not only on gravity or atmospheric pressure but on pressure tanks as well, and can be readily installed upon automobiles or other self-propelled vehicles or upon tanks of any standard or conventional type without change therein, whereby the height or level of the gasoline or other liquid in the tank will be visually indicated with great accuracy at the desired point, my invention comprising a novel construction of a U-tube provided with a column of mercury or other liquid, in which is supported a resistance wire having electrical connections to a galvanometer adapted to be mounted on an instrument board or the like when the device is used in connection with an automobile, the circuit being closed by the ignition switch, whereupon the rise and fall of the liquid whose level is to be ascertained constitutes the operating force through the U-tube so that the variations of the liquid are transmitted by the variable resistance wire to the galvanometer, which is calibrated in gallons.

To the above ends, my invention consists of a novel construction of a U-tube suitably supported in the tank containing the liquid, whose level is to be ascertained, and being provided with parallel members adapted to contain a column of mercury or other liquid, in which the variable resistance wire is supported, provision being made for effecting a free communication between the top of the level of the liquid in the tank and the top of the mercury column, the variations of level in the mercury column being effected by changes of level of the liquid in the tank to increase or decrease the pressure on the pressure side of the mercury column, causing the latter to become unbalanced.

It further consists of other novel features of construction and advantage, all as will be hereinafter fully set forth.

For the purpose of illustrating my invention, I have shown in the accompanying drawings, forms thereof which are at present preferred by me, since the same will give in practice satisfactory and reliable results, although it is to be understood that the various instrumentalities of which my invention consists may be variously arranged and organized and that my invention is not limited to the precise arrangement and organization of these instrumentalities as herein shown and described.

Figure 1 represents a vertical sectional view of a variable resistance liquid indicator embodying my invention.

Figure 2 represents a sectional view of one member of the U-tube having a modified form of resistance wire therein.

Figure 3 represents a wiring diagram showing the collocation of the battery, ignition switch, galvanometer and variable resistance.

Similar numerals of reference indicate corresponding parts.

Referring to the drawings:—

1 designates a gasoline or other tank adapted to contain gasoline or other liquid 2, whose level is indicated at 3, the top of said tank having the opening 4 therein, which is closed by the flange or fitting 5, which is bolted or otherwise secured to said tank.

6 designates a U-tube, which is composed of the upright or pendant member 7, one end as 8 of which is positioned near the bottom of the tank 1, said member 7 communicating at its top 9 with the member 10, which communicates at its bottom by the bend 11 with the upright member 12.

The U-tube 6 can be supported within the tank in any suitable manner, but in practice, I prefer to provide its top 9 with a stud or threaded stem 13, which passes through the flange 5, and is secured by the nut 14.

The upper end of the tube member 12 is threaded into the pendant seat 15 and the port 16 is provided, which affords a communication between the space above the liquid level 3 and the chamber 17 of the tube member 13. The portions of the tubes 10 and 12, as indicated by the horizontal shading, are filled with mercury or other suitable liquid, as indicated at 18, the mercury level in the tube 10 being indicated at 19, and the mercury level in the tube 12 being indicated at 20, and when the tank 1 is filled with liquid 2 to about the level 3, the level of said liquid 2 in the tube 7 will be as indicated at 21, and the space between the levels 19 and 21 will be filled with air under varying degrees of pressure as the liquid level 3 varies.

22 designates a resistance wire, which is supported in the mercury column 18 within

the tube 12, the lower end of said wire being guided in the insulator spider or the like 23, and the upper end thereof being guided in the insulator 24, which is screwed into the seat 25. The variable resistance 26 is mounted in the cap 27 screwed to the insulation 24. It will be understood that the resistance wire 22 is held stationary in its insulating supports 23 and 24, and that its upper end is in contact or in electrical connection at all times with the contiguous end of the resistance wire 26, so that said wires 22 and 26 may be considered as a unit, and the construction I have shown at the upper left-hand portion of Figure 1, is a practical one for convenience of assembling. If desired, the resistance wire 22 may be constructed as seen at 22^a in Figure 2.

In the wiring diagram seen in Figure 3, I have indicated the battery or source of E. M. F. 28, as grounded, the ignition switch being indicated at ignition switch 29, the galvanometer at 30 and the variable resistance 26 already referred to being grounded, and the manner of making the electrical connections between the above elements will be readily understood by those skilled in the art.

When my device is applied to an automobile and used in conjunction with the gasoline tank thereof, the galvanometer will be located on the instrument board where it is calibrated in gallons.

The operation is as follows:—

When the tank 1 is empty, the fluid 18 in the members 10 and 12 is in balance and the levels in said members will be in horizontal alignment, as both columns of said fluid are subject only to atmospheric pressure, thereby exposing the maximum length of the resistance wire 22 in the U-tube.

As the tank 1 is filled to the level indicated at 3, the liquid rises through the open end 8 of the member 7 to the level indicated at 21, thereby increasing the pressure in the upper portions of the members 7 and 10, thereby causing the liquid 18 (or the mercury column) to become unbalanced, its level on the pressure side being now as indicated at 19, and its level on the atmospheric side maintained by the port 19 being as indicated at 20, thereby exposing the minimum length of the resistance wire 22.

The difference in the lengths of the resistance wire exposed constitutes a variable resistance represented as 26 in the wiring diagram in Figure 3.

It will be understood from the foregoing that the port 16 permits of a free communication of air from the top of the liquid level 3 in the tank 1 to the top of the mercury column 18, thereby allowing the pressure in the tank 1 to act on the top of the liquid in the tube 12 and simultaneously the same pressure of air in the tank 1 acts on the bottom of the tube 7 through the medium of the liquid in tank 1 thus maintaining an equilibrium in the tubes 7, 10 and 12, except for the variations of pressure in tube 7, due to the rise and fall of the liquid 2 in tank 1.

It will thus be seen that as the level 3 varies the level 21 will also vary, thereby creating variations of pressure in the chamber in the upper portion of the tubes 7 and 10, whereby variations of the levels 19 and 20 will occur, which will be transmitted by the variable resistance wire 22 to the galvanometer 30 on the instrument board, which is calibrated in gallons of the liquid 2, whose variations in level are to be ascertained.

It will be understood from the wiring diagram in Figure 3, that when the ignition switch 29 is closed, the storage battery 28 energizes the circuit and any resistance difference caused by the variable resistance 26 is registered by the meter or galvanometer 30.

It will be apparent that my novel apparatus will function not only on gravity or atmospheric pressure, but on pressure tanks as well.

It will be understood that while I have designated the liquid or column 18 in the tube members 10 and 12 as being preferably mercury, any other suitable liquid may be employed having the same or equivalent physical characteristics.

While I have designated my novel indicator as being adapted for use in automobiles or other self-propelled vehicles, since the same is capable of being readily installed thereon or in the gasoline tank thereof, without any change or dismantling of the standard automobile units, it will be apparent that the broad principle of my invention is applicable to stationary tanks or for indicating the height or variations of level of other liquids than gasoline and is equally capable of adaptation to any standard tank structure containing liquid, whose variations in level it is desired to ascertain or to record.

It will be apparent that my invention is automatic in its operation, being operated solely by variation of pressure within the upper portion of the tubes 7 and 10, and that it dispenses entirely with a float in the gasoline chamber and with ball mechanical connections intermediate said float to the indicating devices, so that there is no liability of the apparatus getting out of order after being installed in position, and owing to its great simplicity and the absence of any mechanical connections, it can be readily installed in any suitable tank without the employment of skilled labor and without dismantling or taking down any of the standard automobile units, it being immaterial in

the case of an automobile whether the gasoline tank is located in the rear of the automobile or in any other position upon the chassis.

It will further be apparent from the foregoing that my novel indicator will not be affected by changes in temperature or altitudes, no special chemical fluid is required, no float is necessary in the tank, it can be used on all makes and positions of gasoline tanks, and its operation is not affected by the varying positions or inclinations of gasoline tanks during the progress of the automobile up or down grades, hills, mountains or the like.

While I have shown the preferred form of U-tube as embodying the members or limbs 10 and 12 provided with the pendant member or limb 7, it will be apparent that other forms of U-tubes which will function in the same or equivalent manner may be employed, and the manner of supporting and mounting the U-tube with respect to the tank may also be varied, if desired.

It will be apparent that the U-tube 6 and its flange or fitting 5 and their adjuncts can be manufactured and readily installed as a unit in any standard or conventional tank.

It will now be apparent that I have devised a novel and useful variable resistance indicator which embodies the features of advantage enumerated as desirable in the statement of the invention and the above description, and while I have, in the present instance, shown and described a preferred embodiment thereof which will give in practice satisfactory and reliable results, it is to be understood that such embodiment is susceptible of modification in various particulars without departing from the spirit or scope of the invention or sacrificing any of its advantages.

Having thus described my invention, what I claim as new and desire to secure by Letters Patent, is:—

1. In a device of the character stated, a compound U-tube having an atmospheric side, composed of three parallel members of substantially the same length and of equal diameter throughout their extent and each having a liquid column therein, the pendant member of said compound U-tube having a restricted bottom liquid inlet port and the atmospheric side of said liquid column also having a port, a pendant seat for supporting said compound U-shaped tube, said liquid column supporting an insulating block carried by said seat, a resistance wire supported in said liquid column, a guide within said column for the lower end of said wire, the upper end of said wire being guided in said insulating block, said compound U-tube being arranged for suspension within a tank.

2. The herein described unit, comprising a compound U-tube having an atmospheric side composed of three members of substantially the same length and of equal diameter throughout its extent having a pendant member provided with a restricted bottom port, a liquid column in each of said U-tubes, a resistance wire in said liquid column, a support for said tube, there being a port in said support leading to the top of the atmospheric side of said column.

3. The herein described unit comprising a compound U-tube composed of three members of substantially the same length and of equal diameter throughout its extent, having a pendant member provided with a restricted bottom inlet port, a liquid column in said U-tube, a resistance wire in said liquid column, a support for said tube, a port in said support leading to the top of one of the U-tube members, and an insulating block also carried by said support, and guiding the upper end of said resistance wire.

4. The herein described unit comprising a compound U-tube composed of three members of substantially the same length and of equal diameter throughout its extent, having a pendant member provided with a restricted bottom inlet port, a liquid column in said U-tube, a resistance wire in said liquid column, a support including a pendant screw-threaded seat for said tube, a port in said support leading to the top of one of the U-tube members, an insulating block also carried by said support, and guiding the upper end of said resistance wire, and guiding means for the lower end of said resistance wire.

THOMAS M. EYNON.