Dec. 31, 1963 M. FRIEDEL 3,115,815

PHOTOGRAPHIC COMPOSING DEVICE AND METHOD

Filed Nov. 7, 1960 5 Sheets-Sheet 1

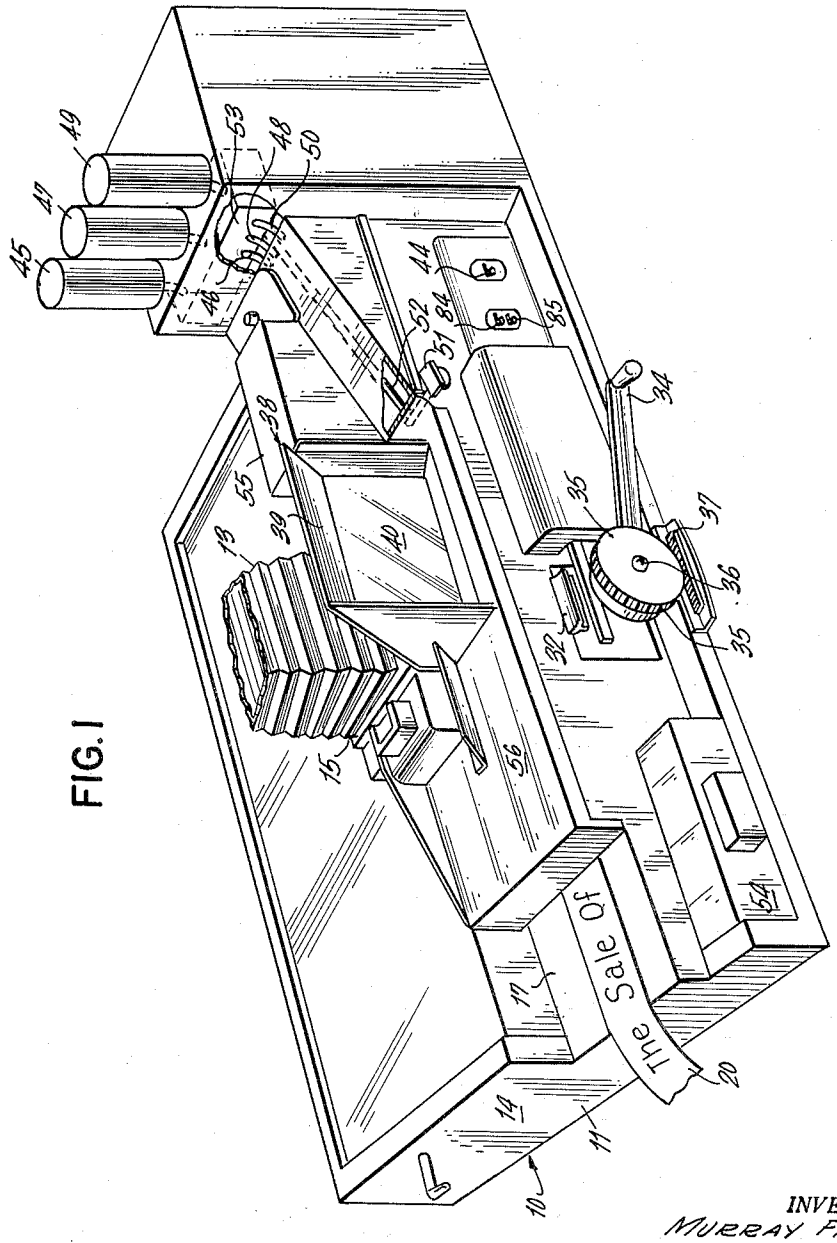

FIG. 1

INVENTOR.
MURRAY FRIEDEL
BY Albert F. Kroman
ATTORNEY

Dec. 31, 1963 M. FRIEDEL 3,115,815

PHOTOGRAPHIC COMPOSING DEVICE AND METHOD

Filed Nov. 7, 1960 5 Sheets-Sheet 2

FIG. 4

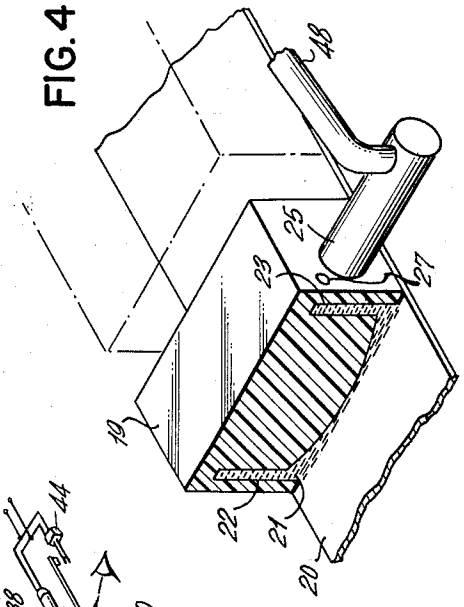

FIG. 2

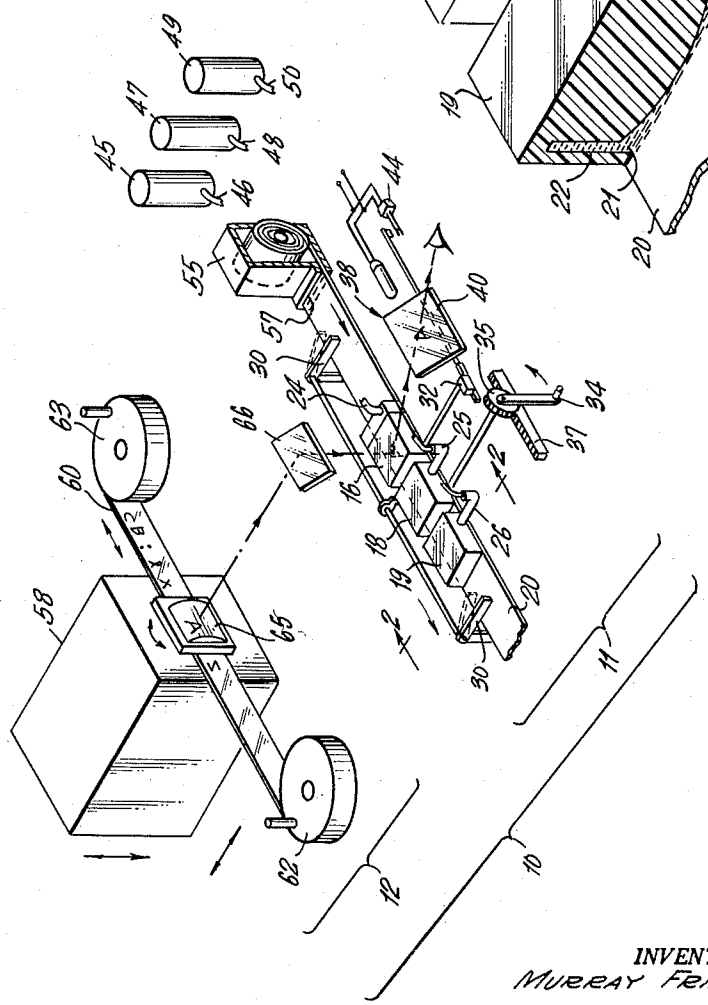

INVENTOR.
MURRAY FRIEDEL
BY Albert F. Bowman
ATTORNEY

Dec. 31, 1963 M. FRIEDEL 3,115,815

PHOTOGRAPHIC COMPOSING DEVICE AND METHOD

Filed Nov. 7, 1960 5 Sheets-Sheet 3

FIG. 8

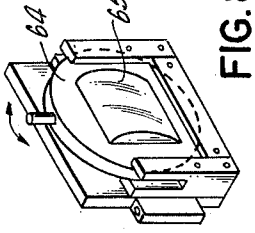

FIG. 3

INVENTOR.
MURRAY FRIEDEL
BY Albert I. Kronman
ATTORNEY

Dec. 31, 1963 M. FRIEDEL 3,115,815

PHOTOGRAPHIC COMPOSING DEVICE AND METHOD

Filed Nov. 7, 1960 5 Sheets-Sheet 4

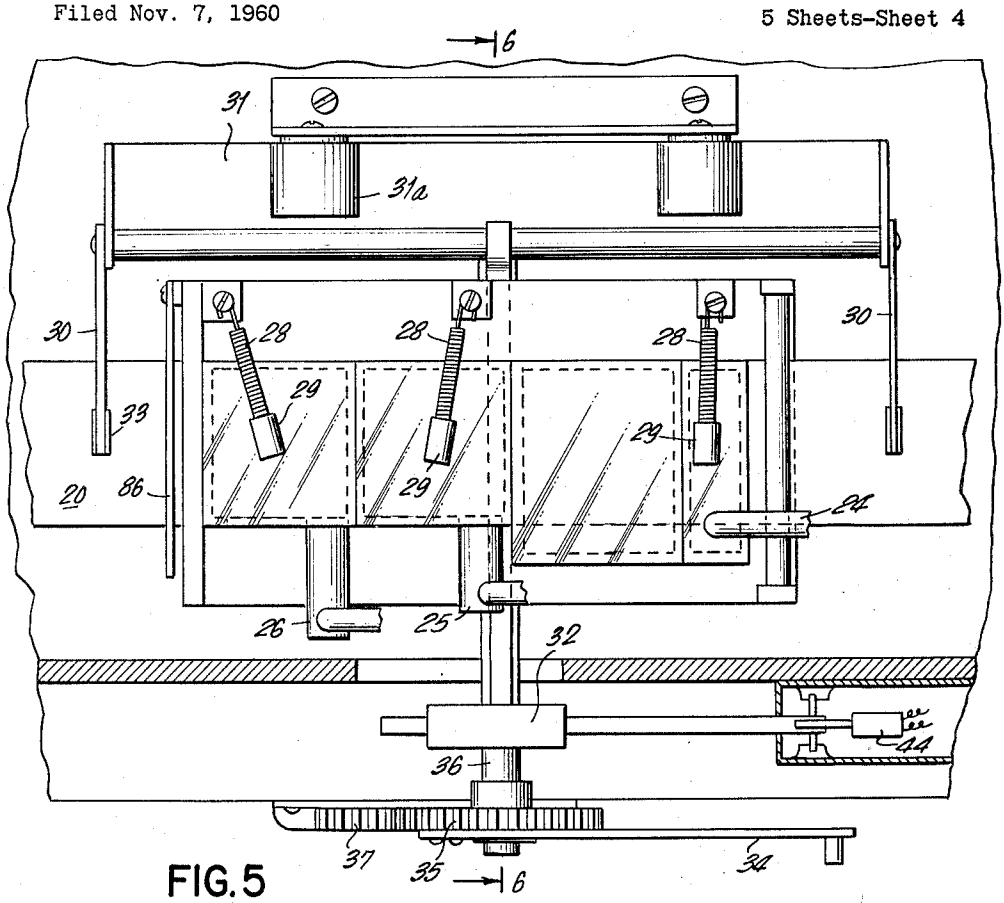

FIG. 5

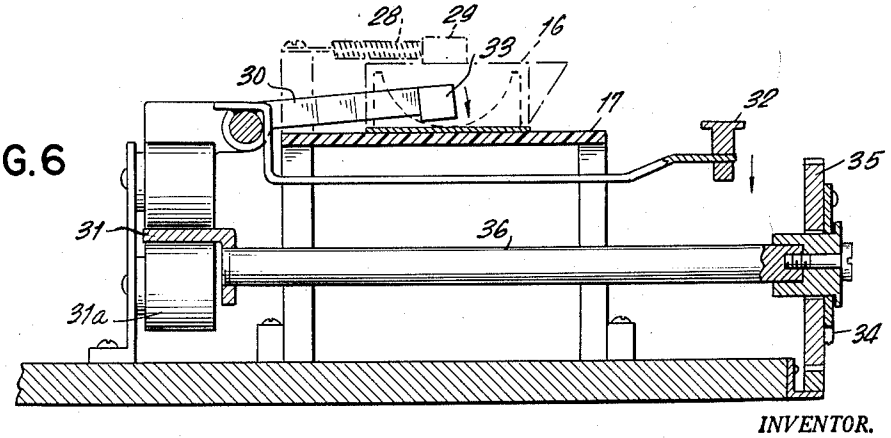

FIG. 6

INVENTOR.
MURRAY FRIEDEL
BY Albert F. Kaufman
ATTORNEY

Dec. 31, 1963 M. FRIEDEL 3,115,815

PHOTOGRAPHIC COMPOSING DEVICE AND METHOD

Filed Nov. 7, 1960 5 Sheets-Sheet 5

FIG. 9

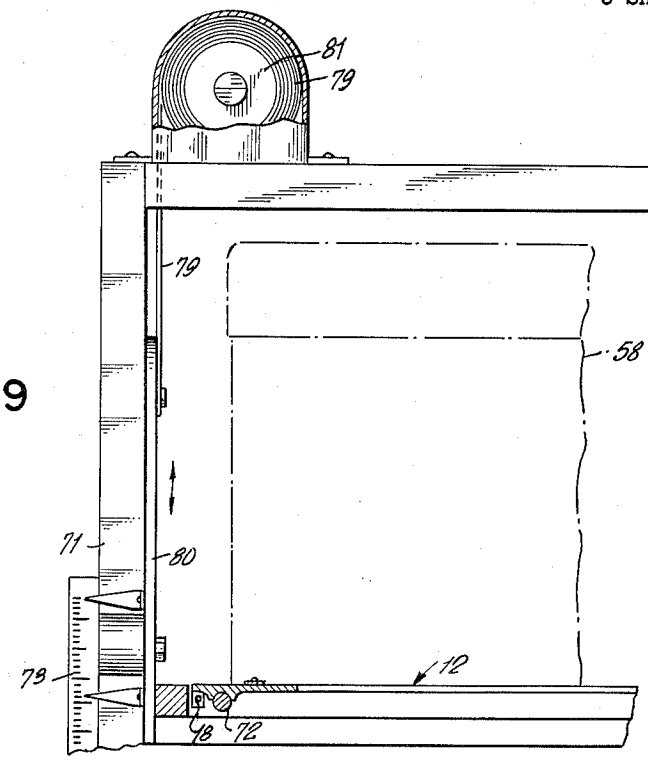

FIG. 7

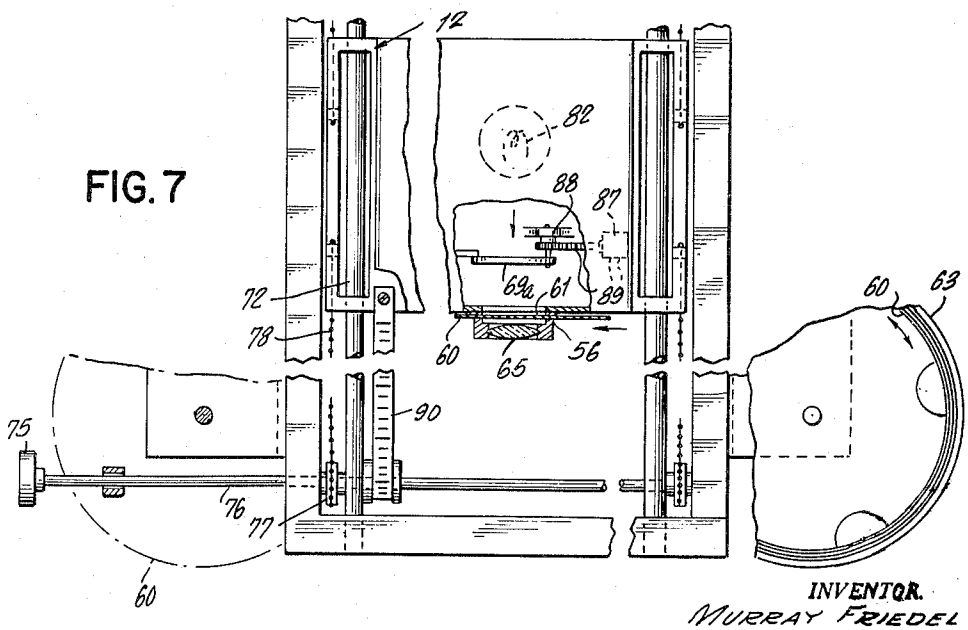

INVENTOR.
MURRAY FRIEDEL
BY Albert F. Kronman
ATTORNEY

United States Patent Office 3,115,815 Patented Dec. 31, 1963

3,115,815

PHOTOGRAPHIC COMPOSING DEVICE AND METHOD

Murray Friedel, North Miami Beach, Fla., assignor to Visual Graphics Corp., New York, N.Y., a corporation of New York

Filed Nov. 7, 1960, Ser. No. 67,659
12 Claims. (Cl. 95—4.5)

This invention relates to photographic composing devices and particularly apparatus for imprinting letters upon a sensitized paper until a complete message is produced.

It is well known to project a series of letters upon a piece of sensitized paper until a complete message has been exposed on the emulsion. Thereafter, the sensitized paper is removed from the projector and developed in the well known photographic manner.

Accordingly it is an object of the present invention to provide a rapid photographic composing device which will overcome the defects of prior art apparatus.

Another object of the present invention is to provide a photographic composing device in which the letters to be imprinted can be watched before and during exposure and developing stages.

A further object of the present invention is to provide a photographic composing device in which the size and shape of letters can be regulated optically without the need for a large number of individual letter strips for projection purposes.

Still another object of the present invention is to provide a device in which the message being printed can be observed as the operation continues thereby eliminating the chances of mistakes.

Still another object of the present invention is to provide a photographic composing device which can be operated in daylight or normal room illumination.

An object of the present invention is to provide a photographic composing device which is capable of producing a wide variety of letter types, pictures and the like.

A feature of the present invention is its use of a developer filled tank or block within which the exposure is made.

Another feature of the present invention is its use of a window above the developing tank through which the operation may be observed.

Still another feature of the present invention is its use of a novel developing solution whereby successive letters can be exposed and developed almost immediately as the work progresses.

A feature of the present invention is its use of a series of chemical retaining tanks or blocks above the sensitized paper.

Still another feature of the present invention is its optically adjustable projecting means whereby the size and shape of the projected letters may be varied to achieve interesting effects.

A further feature of the present invention is its use of a casette for daylight loading of the film into the photographic composing device.

Another feature of the present invention is its use of a curved wall within the chemical receiving tanks whereby air is eliminated from the paper receiving enclosure.

Still another feature of the present invention is its use of additional developing, fixing and stop solutions as the operation proceeds as the result of which uniformly excellent photographic imprinting may be achieved.

The invention consists of the construction, combination and arrangement of parts, as herein illustrated, described and claimed.

In the accompanying drawings, forming a part hereof is illustrated one form of embodiment of the invention

in which drawings similar reference characters designate corresponding parts and in which:

FIGURE 1 is a somewhat isometric view of the film exposing and developing section of the present invention.

FIGURE 2 is a diagrammatic isometric view of a complete embodiment of a photographic composing device made in accordance with the present invention.

FIGURE 3 is a view in side elevation partly broken away of a complete embodiment of the present invention.

FIGURE 4 is an isometric view partly in section of a chemical retaining and receiving block used in the present invention drawn on an enlarged scale.

FIGURE 5 is a top plan view of the developing section of the photographic composing device made in accordance with the present invention.

FIGURE 6 is a sectional view taken on line 6—6 in FIGURE 5, looking in the direction of the arrows.

FIGURE 7 is a fragmentary top plan view of the projection section of the photographic composing device.

FIGURE 8 is a detail view of the rotatable lens arrangement for achieving special effects with the photographic composing device.

FIGURE 9 is a sectional view taken on line 9—9 in FIGURE 3.

Referring to the drawings and particularly to FIGURES 1 and 2, **10** indicates a photographic composing device consisting broadly of a developing section **11** and a projection section **12**. The developing section and projection section are interconnected by a light proof bellows **13**.

The developing section **11**, best shown in FIGURES 1–6, is enclosed within a housing **14** having an opening **15** in the top thereof around which is secured the bellows **13**. Light coming through the bellows **13** from the projection section **12** as hereinafter more fully described, can enter the interior of the housing **14** through the opening **15**.

Immediately below the opening **15** there is disposed a transparent block **16** formed of Lucite, glass or the like, and hereinafter referred to as the developing tank. The developing tank **16** is carried upon a table **17** within the housing **14**. A second block **18** is disposed adjacent the developing tank upon the table **17** and is hereinafter referred to as the stop tank. A third block **19** is carried upon the table **17** adjacent the stop tank **18** and is hereinafter referred to as the fixing tank. The tanks **16, 18, 19**, as best shown in FIGURE 4, rest upon a strip of sensitized paper **20** preferably of the chloride emulsion type which is advanced through the composing device as it is operated. It will be observed from an examination of FIGURE 4 that the tanks **16, 18, 19**, are formed of solid blocks of material which are recessed at the bottom thereof, to form with the sensitized paper **20**, a chemical receiving cavity **21**. The cavity **21** is in communication with vertical channels **22, 23**, which are provided in the body of the tanks **16, 18, 19**. Small pipes **24, 25, 26**, lead from the channels **22, 23**, to the outside of the tanks **16, 18, 19**, for the purpose of conducting developing, fixative, and stop solutions into the respective tanks. In addition, the tanks are provided with small openings **27**, in the sides thereof, which openings permit the chemicals within the tanks to escape therefrom. The openings **27** constitute overflow paths for surplus chemicals.

As shown in FIGURES 2 and 5, the tanks **16, 18** and **19**, are held in close contact with the paper **20** by means of spring-like arms **28**. The arms **28** are secured to the structure of the housing **14** and are provided with small rubber tips **29** which bear against the top of the tanks **16, 18, 19**. The bottom surfaces of the tanks **16, 18, 19**, which bear against the surface of the paper **20** are carefully polished so that the liquid within the cavity **21** of

the tanks 16, 18, 19, remains therein despite that fact that the paper 20 is slid beneath the said tank.

Motion of the paper 20 through the machine is imparted by means of spaced transport arms 30 which are carried by an elongated bracket 31. During the exposing and developing operation of the device the transport arms 30 are in an elevated position as shown in FIGURE 6. However, when it is desired to move the sensitized paper 20, a small lever 32 on the front of the housing 14 is depressed. The lever 32 is connected to the bracket 31 and rotates it until the transport arms 30 come into contact with the sensitized paper 20. The transport arms 30 are provided with rubber pads 33 which make a firm frictional contact with the paper. Thereafter, a transport lever 34 on the front of the housing 14 is rotated in a counter-clockwise direction. The transport lever 34 is attached to a small spur gear 35 which is secured to the end of a shaft 36. The spur gear is also in mesh with a gear rack 37 secured to the bottom of the housing 14. The end of the shaft 36 opposite the spur gear 35 is journaled within the bracket 31. As the transport lever 34 is rotated, therefore, it causes the spur gear 35 to travel along the gear rack 37 thereby moving the shaft 36 and the bracket 31 laterally within the housing 14 and between supporting rollers 31*a*. The lateral motion of the bracket 31 causes the transport arms 30 to move therewith and advance the paper 20 through the machine. It will be understood that the paper 20 is resting upon the table 17 and that the transport arms 30 hold the paper 20 against the table 17 in advancing it through the machine. When the lever 32 is released the transport arms 30 will spring away from the paper 20 and the transport lever 34 may be rotated in a clockwise direction to return the arms 30 to their original position. In this manner, the sensitized paper 20 may be advanced through the machine an amount sufficient to carry it from tank to tank and also sufficient to space successive letters from each other the desired distance.

A viewing station generally indicated at 38 in FIGURES 1 and 3 is carried by the housing 14 above and in front of the developing tank 16. The viewing station 38 consists of a hood 39, a glass plate 40 made of a suitable tinted glass such as is used for safe lights, and an enlarging lens 41 to clearly see the letter or other legend which is being projected upon the sensitized paper 20 below the developing tank 16. It will be understood that the developing tank 16 when filled with developing fluid 42 appears optically as a solid transparent block through which the sensitized paper 20 and any light projected thereon may be viewed. Because of the safe light nature of the glass plate 40, light entering the viewing station 38 through the said plate 40 does not affect the sensitized paper 20. A small safe light bulb 43 is provided within the viewing station 38 adjacent the developing tank 16 for the purpose of observing the developing operation. The bulb 43 is connected to a source of potential through a switch 44 which enables the operator to turn the bulb on as desired. The container of developing solution indicated at 45 is mounted upon the housing 14 and connected to the pipe 24 of the developing tank by means of a small conduit 46. A second container 47 in which there is placed a stop solution is carried upon the housing 14 and is connected to the pipe 25 on the stop tank 18 by means of a small conduit 48. A third container 49 is provided on the housing 14 to hold a fixing solution led into the pipe 25 of the fixing tank 19 by a small conduit 50. A cycling lever 51 which projects from the front of the housing 14 is connected by means of a rod 52 to valves 53 beneath the containers 45, 47 and 49. When the cycling lever 51 is pressed it opens the valves 53 and permits a small amount of the fluids within the containers to pass through the conduits and into the tanks 16, 18 and 19. The fresh chemicals are added to the chemicals already in the tanks and cause the tanks to overflow through the openings 27 from which they flow down through the housing 14 and are led into a small reservoir 54. The reservoir 54 is carried within the housing 14 and may be emptied as desired. In this manner, the developing chemicals within the tanks are always fresh and the developed legend or message is of uniform excellence.

The sensitized paper 20 of the photo-composing device is carried within a casette 55, best shown in FIGS. 1 and 2. The casette 55 consists of a small box within which the roll of film is carried. The box of the casette 55 is provided with a slot 57 in the bottom thereof through which the paper 20 can be drawn. The slot 57 is provided with a light trap in the well kept manner. With the casette 55 abutting the housing 14, the paper 20 can be drawn from the casette and advanced through the machine without danger of exposing the film in the casette to ambient light. It will be observed from an examination of FIGURE 5 that the spring arms 28 are pivotally mounted so that the tanks 16, 18, 19, can be removed from the table 17 to permit the paper 20 to be stretched thereacross. Thereafter, the tanks can be returned to their proper location and the arms 28 swung back over them in order to hold them tightly against the paper. The hood 39 and its supporting removable cover 56 protects the paper 20 from room light until it leaves the developing tanks 16, 18, 19.

The projector section 12 of the photographic composing device consists of a housing 58 within which there is carried a lamp 82 and the well known projector lens elements (not shown). A film guide 59 is provided on the front of the housing 58 and is adapted to receive a strip of film 60. The film 60 has a plurality of letters or symbols thereon which can be moved into the opening 61 in the film guide 59 so that light passing through the film guide 59 from the projector housing 58 will pass through the film. The film 60 may be moved from side to side on reels 62, 63, so that the desired letters can be brought into register with the openings 61 for projection purposes.

The film guide 59 is also provided with a rotatable amount 64 within which there is supported a lens 65, see FIGURE 8. The lens 65 is of a configuration that when it is in a horizontal position the letters projected therethrough will be vertically compressed and when it is swung into a vertical position the letters will be horizontally compressed. In addition, by disposing the lens 65 at various angles a slant lettering effect may be achieved. In this manner, a wide variety of lettering styles may be produced without changing the film strip 60.

The light coming through the lens 65 is directed at a mirror 66 which is angularly disposed within an enclosure 67 secured to the top of the bellows 13. An opening 68 is provided in the enclosure 67 to permit the light to enter the enclosure and reach the mirror. The mirror 66 directs the light from the projector downwardly through the bellows 13 and upon the sensitized paper 20 beneath the developing tank 16. A small lens 69 is carried within the top of the bellows 13 to assist in the projection of the image upon the sensitized paper 20.

A suitable safe light shield 69*a* is swingably carried within the housing 58 in front of the projector lamp and remains in front of the said lamp at all times except when the exposure is being made. In this manner, the light can project the letters upon the sensitized paper where it can be observed by the operator 70 until the latter is exactly located for the desired message imprinting. Thereafter, the safe light shield 69*a* is swung away and the projection light permitted to pass through the film for exposure purposes.

It will be observed from FIGURES 3 and 9, the projection section 12 is mounted upon a vertical and horizontal support 71, 72, whereby it may be moved vertically and horizontally with respect to the developing section 11. As a result of this adjustability, it is possible to increase or decrease the size of the projected letters, optically,

merely by increasing or decreasing the length of the path of the light from the projection section **12** to the sensitized paper **20** in the developing section **11**. As shown in FIGURE 9 the vertical support **72** is provided with a scale **73** adjacent the edge thereof. Pointers **74** carried on the projection section bracket **80** overlie the scale **73** and permit the vertical adjustment of the projection section with accuracy. A flexible rule **90** on the projection section is provided for accurate horizontal setting. The projection section **12** is moved back and forth upon the horizontal support **72** by means of a crank **75** which is secured to the end of a shaft **76** on which sprocket wheels **77** are mounted. The sprocket wheels drive a chain **78** which passes over pulleys (not shown) on the horizontal support and which is also secured to the projection section to move it back and forth upon the horizontal support **72**. A flexible tape **79** is attached at one end to the bracket **80** which carries the horizontal support **72**. The vertical tape **79** is passed over a pulley **81** which is provided with a tensioning clutch (not shown) to hold the projection section **12** on the vertical support **71** in any set position. It will be understood that as the projection section is raised and lowered, the bellows **13** will be elongated or compressed as the enclosure **67** is raised or lowered.

A preferred developing solution for use in conjunction with the present photographic device is as follows:

Part #1:
- Water, 125 degrees, 24 ounces
- Metol, 45 grains
- Sodium sulphite dessicated, 1 oz., 246 grains
- Hydroquinone, 165 grains
- Sodium carbonate monohydrated, 1 oz., 245 grains
- Potassium bromide, 22½ grains
- Cold water to make 32 ounces, then dilute 1 to 2 before using.

Part #2:
- 32 oz. water (warm)
- ½ oz. potassium bromide

Part #3:
- 32 oz. warm water
- Anti-Fog #1, 30 grains

Part #4:
- 32 oz. water
- Sodium sulphate 1 oz.

All chemicals are mixed in the order as follows: 8 oz. Part #1, add 2 oz. Part #2, 4 oz. Part #3, and 6 oz. Part #4.

Solution Part #1, is the basic developing formula and is an extreme contrast developer of high speed for chloride emulsion papers. Solution #2 is added to decelerate the action of the metol hydroquinone to get a visible image time within the developing tank within five seconds after the exposure. Solution #3 is used to eliminate side reactions of the chemicals which create irregular grayish streaks on the emulsion of the paper. Solution #4 eliminates pink stains which would normally appear from continued exposure of the emulsion to oxygen.

A suitable stop solution for use in the present invention consists of 4 ounces of acetic acid 28% to which is added cold water to make 32 ounces.

A suitable fixative solution for use in conjunction with the present invention consists of ammonium thiosulphate 1 lb., potassium metabisulphate 2 ounces, and cold water to make 1 gallon.

Metol referred to hereinabove is also sold by different companies under the trade-names, Rhodol, Elon, Genol, Photol, etc., and consists of monomethyl para-aminophenol sulphate; parahydroxy-monomethylaniline sulphate; 1 hyldoxy-4-methylaminobenzene sulphate. Anti-Fog #1, referred to hereinabove is the trade-name for, Benzitriazol, a developer improver.

With the developer, stop and fixative solution in the proper containers and the sensitized paper threaded beneath the tanks **16**, **18**, **19**, the letter displaying film **60** in place, the photographic composing device is ready for operation. The proper letter is brought into register with the opening **61** in the film guide and the projector light **82** turned on. The light **82** is controlled by means of switch **84**. The letter to be photographically printed will then show up on the paper **20** within the viewing station **38**. Since the safe light shield **69** is in place in front of the projector bulb **82** there will be no exposure at this juncture. The projection section **12** can then be adjusted vertically and horizontally to give the letter the proper height. In addition, the lens **65** on the front of the film guide **59** can be rotated to alter the shape of the letter in the manner hereinabove described.

As the developing fluid flows into the cavity **21** and by reason of the curved wall **86**, in the top of the cavity, the said cavity fills and forces any air therein upwardly and out of the vent holes or openings **27**. In this manner no air can be entrapped within the cavity **21** to the detriment of the developing operation. With the projected letter in proper alignment, orientation and size, the operator next presses the cycling lever **51** which serves to release a small supply of chemicals to the tanks **16**, **18**, **19**. A timer switch **85** is then thrown which swings the safe light shield **69** from in front of the projector bulb and also keeps it in the exposing position for the given or desired interval of time. The time interval is governed by the timer **83** in the housing **11**. At the end of the exposure the safe light shield **69** swings back into place following which the development of the letter can be observed through the viewing station **38**. The small light **43** may be turned on by means of the switch **44** to watch the developing action. As soon as the letter is developed the transport arm lever **32** is depressed and the transport lever **34** rotated in order to move the letter out of the way for the next exposure. A suitable next letter is selected on the film **60** and the operation repeated. It will be observed that as the letters move out of the developing tank **16** they slide beneath and into the stop tank and then into the fixing tank **19**. After the sensitized paper leaves the fixing tank **19**, the last remaining bit of chemical is wiped clear by means of a squeegee **86**, see FIGURE 5, and is practically ready for use.

The specific mechanism for moving the safe-light shield **69** has been shown as a solenoid **87**, a gear **88** and a gear rack **89**, however, it will be apparent that other well known means may be used for this purpose.

From the foregoing it will be seen that there has been provided a photographic composing device which is capable of a wide variety of printing operations all of which may be carried out in ordinary room illumination without danger of accidently exposing the paper. In addition, the apparatus permits the operator to watch the formation of the letters and to adjust and arrange them as the printing is carried on. Each letter is developed under the viewing station so that the operator at all times can be aware of the nature and spacing of the letters produced. There has also been provided a novel developing technique whereby the projected letters are recorded on the sensitized paper while the paper is actually within the developing solution.

Having thus full described the invention what is claimed as new and desired to be secured by Letters Patent of the United States, is:

1. A photographic composing device comprising a projection section, a developing section, and a light proof hollow member providing a light path from the projection section to the developing section, a light sensitive member carried within the developing section beneath the hollow member, at least one transparent tank-like member overlying the light sensitive member, a source of developing fluid connected to the tank-like member to fill the said member and cover the light sensitive member beneath the tank-like member, and means to project an image upon the light sensitive member through the fluid

filled tank-like member whereby the image is photographically imprinted thereon.

2. A photographic composing device comprising a projection section, a developing section, and a light proof hollow member providing a light path from the projection section to the developing section, a table in the developing section, a light sensitive member carried within the developing section beneath the hollow member upon the table, at least one transparent tank-like member overlying the light sensitive member on top of the table, a fluid receiving cavity in the bottom of the tank-like member, a source of developing fluid connected to the tank-like member cavity to fill the said member and cover the light sensitive member beneath the tank-like member, and means to project an image upon the light sensitive member through the fluid filled tank-like member, whereby the image is photographically imprinted thereon.

3. A photographic composing device comprising a projection section, a developing section, and a light proof bellows member providing a light path from the projection section to the developing section, a light sensitive member carried within the developing section beneath the bellows, at least one transparent tank-like member overlying the light sensitive member, a source of developing fluid connected to the tank-like member to fill the said member and cover the light sensitive member beneath the tank-like member, means to project an image upon the light sensitive member through the fluid filled tank-like member, whereby the image is photographically imprinted thereon, and means to transport the light sensitive member through the developing section.

4. A photographic composing device comprising a projection section, a developing section, and a light proof hollow member providing a light path from the projection section to the developing section, a light sensitive member carried within the developing section beneath the hollow member, as least one transparent tank-like member overlying the light sensitive member, a source of developing fluid connected to the tank-like member to fill the said member and cover the light sensitive member beneath the tank-like member, a viewing station above the tank-like member comprising a hood and a window in said hood for observing the light sensitive member beneath the tank-like member, and means to project an image upon the light sensitive member through the fluid filled tank-like member, whereby the image is photographically imprinted thereon.

5. A photographic composing device comprising a projection section, a developing section, and a light proof bellows member providing a light path from the projection section to the developing section, a table in the developing section, a light sensitive member carried upon the table within the developing section beneath the bellows, a first transparent tank-like member disposed upon the light sensitive member on top of the table, a first fluid receiving cavity in the bottom of the first tank-like member, a source of developing fluid connected to the first cavity to fill the said cavity and cover the light sensitive member beneath the first tank-like member, a second tank-like member upon the table disposed upon the light sensitive member and adjacent the first tank-like member, a second fluid receiving cavity in the bottom of the second tank-like member, a source of stop solution connected to the second cavity to fill the cavity and cover the light sensitive member thereunder, a third tank-like member upon the table disposed upon the light sensitive member, and adjacent the second tank-like member, a third fluid receiving cavity in the bottom of the third tank-like member, a source of fixative solution connected to the third cavity to fill the third cavity and cover the light sensitive member thereunder, means to project an image from the projection section upon the light sensitive member through the fluid filled first tank-like member whereby the image is photographically imprinted thereon and means to transport the light sensitive member across the table and through the fluid filled cavities of the first, second and third tank-like members.

6. A device according to claim 5 in which the developing fluid is an extreme contrast developer of high speed for chloride emulsion papers containing a decelerator to extend the developing time.

7. A device according to claim 5 in which the projection section is provided with a lens rotatably mounted thereon and an image film disposed between the lens and the remainder of the projection section whereby the projected image may be varied by the angular disposition of the lens.

8. A photographic composing device comprising a projection section, a developing section, and a light proof bellows member providing a light path from the projection section to the developing section, a table in the developing section, a light proof cover member above the table, a viewing station comprising a hood secured to the cover member, said cover member being provided with an opening beneath the hood and a safe-light transparent window in the hood for observing interior of the cover member, a light sensitive member carried upon the table within the developing section beneath the bellows and cover member, a first transparent tank-like member disposed upon the light sensitive member on top of the table and beneath the cover member, a first fluid receiving cavity in the bottom of the first tank-like member, a source of developing fluid connected to the first cavity to fill the said cavity and cover the light sensitive member beneath the first tank-like member, a second tank-like member upon the table disposed upon the light sensitive member and adjacent the first tank-like member, a second fluid receiving cavity in the bottom of the second tank-like member, a source of stop solution connected to the second cavity to fill the cavity and cover the light sensitive member thereunder, a third tank-like member upon the table disposed upon the light sensitive member, and adjacent the second tank-like member, a third fluid receiving cavity in the bottom of the third tank-like member, a source of fixative solution connected to the third cavity to fill the third cavity and cover the light sensitive member thereunder, means to project an image from the projection section upon the light sensitive member through the fluid filled first tank-like member whereby the image is photographically imprinted thereon and means to transport the light sensitive member across the table and through the fluid filled cavities of the first, second and third tank-like members.

9. A device according to claim 8 in which the tank-like member cavities are formed with a curved top wall to provide an area of minimum depth at the center of the cavity and curve upwardly to join vertical fluid receiving channels in the tank-like members.

10. A device according to claim 8 in which the tank-like members are held in fluid tight contact with the light sensitive member by springs carried within the developing section.

11. A photographic composing device comprising a projection section, a source of illumination in the projection section, a safe-light filter in front of the illumination source, means to shift the safe-light filter from its position in front of the illumination source to permit the unfiltered light to leave the projection section, a developing section, and a light proof bellows member providing a light path from the projection section to the developing section, a table in the developing section, a light sensitive member carried upon the table within the developing section beneath the bellows, a first transparent tank-like member disposed upon the light sensitive member on top of the table, a first fluid receiving cavity in the bottom of the first tank-like member, a source of developing fluid connected to the first cavity to fill the said cavity and cover the light sensitive member beneath the first tank-like member, a second tank-like member upon the table disposed upon the light sensitive member and adjacent

the first tank-like member, a second fluid receiving cavity in the bottom of the second tank-like member, a source of stop solution connected to the second cavity to fill the cavity and cover the light sensitive member thereunder, a third tank-like member upon the table disposed upon the light sensitive member, and adjacent the second tank-like member, a third fluid receiving cavity in the bottom of the third tank-like member, a source of fixative solution connected to the third cavity to fill the third cavity and cover the light sensitive member thereunder, means to project an image through the safe-light filter upon the light sensitive member through the fluid filled tank, means to shift the safe-light filter from the source of illumination to project an image from the projection section upon the light sensitive member through the fluid filled first tank-like member whereby the image is photographically imprinted thereon and means to support the light sensitive member across the table and through the fluid filled cavities of the first, second and third tank-like members.

12. A photographic composing device comprising a projection section, a source of illumination in the projection section, a safe-light filter in front of the illumination source, means to shift the safe-light from its position in front of the illumination source to permit the unfiltered light to leave the projection section, a developing section, and a light proof bellows member providing a light path from the projection section to the developing section, a table in the developing section, a light proof cover member above the table, a viewing station comprising a hood secured to the cover member, said cover member being provided with an opening beneath the hood and a safe-light transparent window in the hood for observing the interior of the cover member, a light sensitive member carried upon the table within the developing section beneath the bellows and cover member, a first transparent tank-like member disposed upon the light sensitive member on top of the table and beneath the cover member, a

first fluid receiving cavity in the bottom of the first tank-like member, a source of developing fluid connected to the first cavity to fill the said cavity and cover the light sensitive member beneath the first tank-like member, a second tank-like member upon the table disposed upon the light sensitive member and adjacent the first tank-like member, a second fluid receiving cavity in the bottom of the second tank-like member, a source of stop solution connected to the second cavity to fill the cavity and cover the light sensitive member thereunder, a third tank-like member upon the table disposed upon the light sensitive member, and adjacent the second tank-like member, a third fluid receiving cavity in the bottom of the third tank-like member, a source of fixative solution connected to the third cavity to fill the third cavity and cover the light sensitive member thereunder, means to project an image through the safe-light filter upon the light sensitive member through the fluid filled tank, means to shift the safe-light filter from the source of illumination to project an image from the projection section upon the light sensitive member through the fluid filled first tank-like member whereby the image is photographically imprinted thereon and means to transport the light sensitive member across the table and through the fluid filled cavities of the first, second and third tank-like members.

References Cited in the file of this patent

UNITED STATES PATENTS

1,396,770	Mees	Nov. 15, 1921
1,798,109	Rankin	Sept. 24, 1952
2,586,772	Ashby	Feb. 26, 1952
2,688,278	Tuttle	Sept. 7, 1954
2,762,277	McChesney	Sept. 11, 1956
2,956,494	Tyler	Oct. 18, 1960

FOREIGN PATENTS

679,930	Great Britain	Sept. 24, 1952