PCT WORLD INTELLECTUAL PROPERTY ORGANIZATION
International Bureau

INTERNATIONAL APPLICATION PUBLISHED UNDER THE PATENT COOPERATION TREATY (PCT)

(51) International Patent Classification 5 :
E04C 5/07, 5/01, C04B 18/02, B28B 17/02, 1/52, B65D 65/46

A1

(11) International Publication Number: **WO 94/25702**

(43) International Publication Date: 10 November 1994 (10.11.94)

(21) International Application Number: PCT/US94/04856

(22) International Filing Date: 3 May 1994 (03.05.94)

(30) Priority Data:
08/058,006 3 May 1993 (03.05.93) US

(71) Applicant *(for all designated States except US)*: MINNESOTA MINING AND MANUFACTURING COMPANY [US/US]; 3M Center, P.O. Box 33427, Saint Paul, MN 55133-3427 (US).

(72) Inventors; and
(75) Inventors/Applicants *(for US only)*: SANDERS, James, F. [US/US]; Township of St. Joseph, WI 54082 (US). RICH, Larry, D. [US/US]; 6348 N 40 Street, Oakdale, MN 55128 (US). MACDONALD, Clifford, N. [US/US]; P.O. Box 33427, Saint Paul, MN 55133-3427 (US). HURLOCKER, Lacy, Max [US/US]; 2225 Thomas Lane, White Bear Lake, MN 55110 (US).

(74) Agents: SPRAGUE, Robert, W. et al.; Minnesota Mining and Manufacturing Company, Office of Intellectual Property Counsel, P.O. Box 33427, Saint Paul, MN 55133-3427 (US).

(81) Designated States: AT, AU, BB, BG, BR, BY, CA, CH, CN, CZ, DE, DK, ES, FI, GB, GE, HU, JP, KP, KR, KZ, LK, LU, LV, MG, MN, MW, NL, NO, NZ, PL, PT, RO, RU, SD, SE, SI, SK, UA, US, UZ, VN, European patent (AT, BE, CH, DE, DK, ES, FR, GB, GR, IE, IT, LU, MC, NL, PT, SE), OAPI patent (BF, BJ, CF, CG, CI, CM, GA, GN, ML, MR, NE, SN, TD, TG).

Published
With international search report.
Before the expiration of the time limit for amending the claims and to be republished in the event of the receipt of amendments.

(54) Title: REINFORCING ELEMENTS FOR CASTABLE COMPOSITIONS

(57) Abstract

Methods and articles for reinforcing castable compositions through the use of reinforcing elements (22) maintained in a close-packed alignment in a dispersible containment means (24).

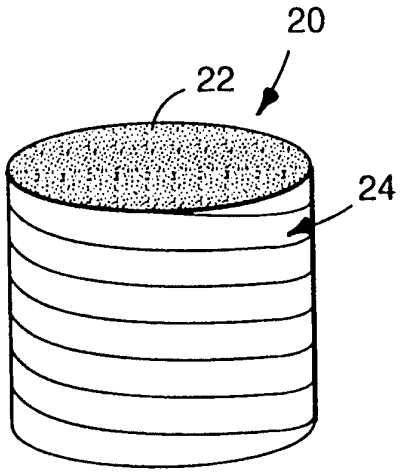

FOR THE PURPOSES OF INFORMATION ONLY

Codes used to identify States party to the PCT on the front pages of pamphlets publishing international applications under the PCT.

AT	Austria	**GB**	United Kingdom	**MR**	Mauritania
AU	Australia	**GE**	Georgia	**MW**	Malawi
BB	Barbados	**GN**	Guinea	**NE**	Niger
BE	Belgium	**GR**	Greece	**NL**	Netherlands
BF	Burkina Faso	**HU**	Hungary	**NO**	Norway
BG	Bulgaria	**IE**	Ireland	**NZ**	New Zealand
BJ	Benin	**IT**	Italy	**PL**	Poland
BR	Brazil	**JP**	Japan	**PT**	Portugal
BY	Belarus	**KE**	Kenya	**RO**	Romania
CA	Canada	**KG**	Kyrgystan	**RU**	Russian Federation
CF	Central African Republic	**KP**	Democratic People's Republic of Korea	**SD**	Sudan
CG	Congo			**SE**	Sweden
CH	Switzerland	**KR**	Republic of Korea	**SI**	Slovenia
CI	Côte d'Ivoire	**KZ**	Kazakhstan	**SK**	Slovakia
CM	Cameroon	**LI**	Liechtenstein	**SN**	Senegal
CN	China	**LK**	Sri Lanka	**TD**	Chad
CS	Czechoslovakia	**LU**	Luxembourg	**TG**	Togo
CZ	Czech Republic	**LV**	Latvia	**TJ**	Tajikistan
DE	Germany	**MC**	Monaco	**TT**	Trinidad and Tobago
DK	Denmark	**MD**	Republic of Moldova	**UA**	Ukraine
ES	Spain	**MG**	Madagascar	**US**	United States of America
FI	Finland	**ML**	Mali	**UZ**	Uzbekistan
FR	France	**MN**	Mongolia	**VN**	Viet Nam
GA	Gabon				

REINFORCING ELEMENTS FOR CASTABLE COMPOSITIONS

The present invention relates to the reinforcement of castable compositions.

BACKGROUND

It is well known that the performance of castable compositions can be improved by the incorporation of reinforcing elements. For example, reinforcing elements are incorporated into cementitous compositions such as mortar and concrete to improve their strength or to reduce surface cracking tendencies. Reinforcing elements encompass a broad range of shapes, but they typically share an elongate structure (i.e., the dimension of a major axis is significantly larger than the dimension of the minor axis). The elongate structures include rod-like filaments having substantially round cross-sections, flat strips having a helically twisted structure or made with a varying cross-section to reduce pull-out tendencies, or cable-like constructions based on twisted constructions of rod-like filaments. Materials used as reinforcing elements include metals, synthetic polymeric materials, and naturally occurring materials.

In cementitous compositions (i.e., mortar or concrete), it is known that the impact strength, flexural strength and toughness of the material improves with increasing percentages of the reinforcing elements in the composition. There is, however, a practical limit to the level of reinforcing elements that can be introduced as above this limit, the reinforcing elements tend to entangle with each other, forming balls or other undesirable conglomerates.

Proper selection of criteria relating to the length and diameter (eg. aspect ratio) of the reinforcing elements can help reduce their tendency to agglomerate. Achieving improved mixability by this technique is difficult, however, as these types of changes negatively impact the reinforcing capabilities of the elements.

The method of delivering reinforcing elements into cementitous compositions also plays a major role in realizing high incorporation levels of reinforcing elements. For example, high aspect ratio reinforcing elements must be introduced into cementitous compositions as substantially individual fibers and in very low concentrations over an extended period of time with very good mixing if high volume concentrations of reinforcing elements are desired.

Rod shaped reinforcing elements can become entangled and/or agglomerated in their shipping containers as a result of the vibration and jostling encountered during shipping. Agglomerated elements are not readily pourable from their shipping containers and cannot be added to cementitous compositions until the agglomerates have been broken up into individual elements. Various mechanical and pneumatic techniques have been employed to break-up the agglomerated masses and introduce the individual elements into the cementitous mix as a rain of elements. U.S. Pat. No. 4,121,943 (Akazawa et al.) describes a machine designed to separate reinforcing fibers into separate units prior to introducing them into the cementitous mix.

An alternative approach to incorporating high levels of reinforcing elements into cementitous compositions is described in U.S. Pat. No. 3,716,386 (Kempster), where fibers are treated with a high viscosity, friction reducing substance prior to the reinforcing elements being introduced into the mix.

A factor common to a number of recent approaches to achieving high incorporation levels of high aspect ratio elongate reinforcing elements (i.e., fibers) into cementitous compositions is to introduce the fibers into the compositions in an organized, aligned array that, on mixing, slowly releases the fibers in an aligned array. Fibers released into cementitous compositions in this manner experience fewer fiber-fiber interactions and subsequently show less tendency toward agglomeration or balling as compared to fibers introduced into the compositions in a totally random orientation. U.S. Pat. Nos. 4,224,377 and 4,314,853 (Moens) describe a reinforcing member comprising a plurality of wire elements which are united by a binder which loses its binding ability during the mixing process, and a process for incorporating these members into

cementitous compositions. U.S. Pat, No. 4,414,030 (Restrepo) describes reinforcing elements for cementitous compositions comprising ribbons of fibrillated polyolefin film. The fibrillated fibers are maintained in an aligned configuration by inter-fiber fibrils which are broken by mechanical mixing, thereby releasing individual fibers into the cementitous composition in an aligned configuration.

Another alternative to introducing fibers into cementitous compositions in an aligned configuration is described in Fiber Reinforced Cements and Concretes, edited by R.N. Swamy and B. Barr, Elsvier Applied Science, New York, 1989. pp 316-325. This processes utilizes short fibrillated polypropylene fiber strips which are twisted to produce a cable-like structure to deliver the fibers to cementitous compositions. The mechanical mixing action of processing the cementitous composition breaks the cable-like structure apart, releasing individual fibrillated film fibers into the mix in an aligned manner.

SUMMARY OF THE INVENTION

The present invention relates to a plurality of fiber bundles releasably held together in the form of a dispersible unitized package, each of the bundles comprising a plurality of high aspect ratio polymeric fibers maintained in a substantially unentangled arrangement substantially free of inter-fiber binding, each of the bundles being adapted to release fibers from the bundles when the package is introduced into a castable composition under dispersion conditions such that the individual fibers are released substantially unentangled into the castable composition.

The dispersion conditions contemplated above and otherwise in the practice of this invention include the action of water or an organic solvent which is contained in the castable composition, or heat generated by the castable composition, or mechanical agitation of the castable composition, or any combination of two or more of the foregoing, which action serves to release fibers from the bundles.

A preferred unitized package of reinforcing elements for castable compositions comprising a liquid/solid or liquid mixtures comprises a dispersible packaging means, the dispersion of which is effected by the combined action of a dispersing agent present in the castable composition and substantially concurrent mechanical mixing of the mixture of the castable composition and the unitized package. The packaging means consolidates a multiplicity of primary packages of reinforcing elements, the primary packages of reinforcing elements comprising a plurality of elongate reinforcing elements which are maintained in a close-packed, side-by-side alignment by a primary dispersible containment means. The primary containment means comprises a perimeter wrap maintained under sufficient tension to substantially restrict lateral movement of said elongate reinforcing elements relative to one another. Continuity of the primary containment means is controllably disrupted by dispersion of at least a portion thereof, the dispersion of the primary containment means effected by the combined action of a dispersing agent present in the castable composition and substantially concurrent mechanical mixing of the mixture of the primary packages of reinforcing elements in the castable composition. Disruption of the continuity of the primary containment means releases the elongate reinforcing elements and allows uniform mixing of the elements into the castable composition.

The present invention further provides a method for reinforcing a castable composition comprising the steps of introducing into a castable composition under dispersion conditions a dispersible fiber bundle comprising a plurality of high aspect ratio polymeric fibers maintained in a substantially unentangled arrangement substantially free of inter-fiber binding, and thereafter releasing fibers from said bundle into the castable composition in a substantially unentangled manner.

A preferred process for preparing a castable composition comprising a liquid/solid or liquid mixture, the mixture comprising a multiplicity of elongate reinforcing elements comprises the steps of: a) Preparing a mixture of ingredient materials for the castable composition; b) Introducing at least one

primary package of elongate reinforcing elements into the mixture, the package of reinforcing elements comprising a plurality of elongate reinforcing elements maintained in a close-packed, side-by-side alignment by a primary dispersible containment means, the primary containment means comprising a perimeter wrap maintained under sufficient tension to substantially restrict lateral movement of said elongate reinforcing elements relative to one another. The continuity of the primary containment means is capable of being controllably disrupted by dispersion of at least a portion thereof, the dispersion of the primary containment means being effected by the combined action of a dispersing agent present in the castable composition and the substantially concurrent mechanical mixing of the mixture of the at least one primary package of reinforcing elements; c) Mixing the mixture of the castable composition and the at least one primary package of reinforcing elements to distribute substantially uniformly the at least one primary package of reinforcing elements into the castable material and to subsequently disrupt the continuity of the primary containment means, thus releasing the elongate reinforcing elements into the castable composition; and, d) Continuing to mix the mixture of the castable composition and the elongate reinforcing elements until the elongate reinforcing elements are distributed substantially uniformly throughout the castable composition.

BRIEF DESCRIPTION OF THE DRAWINGS

Figure 1 is an illustration of a unitized package of reinforcing elements according to the present invention.

Figure 2 is an illustration of a package of elongate reinforcing elements, including a primary containment means, according to the present invention.

Figure 3 is an illustration of an alternative package of elongate reinforcing elements, including a primary containment means, according to the present invention.

Figure 4 is an illustration of an alternative package of elongate reinforcing elements incorporating two different sizes of reinforcing elements, according to the present invention.

Figure 5 is a fragment of Figure 4 taken along 55 illustrating a method of securing perimeter wrap of primary containment means 24.

DEFINITIONS

As used herein:

"castable composition" means flowable compositions that can be cast as such or can be applied to surfaces by alternative techniques such as shotcrete process used with cementitous compositions; such castable compositions include, for example, cementitious compositions such as concrete or mortar; bituminous compositions such as asphalt; and polymer compositions, such as epoxy resins;

"liquid/solid" means compositions comprising a mixture of two or more liquid and solid components; and

"liquid mixture" means compositions comprising a curable liquid and optionally other liquid or dissolved components.

DETAILED DESCRIPTION OF PREFERRED EMBODIMENTS OF THE INVENTION

Reinforcing elements for castable compositions, and particularly for cementitous compositions, frequently have a much higher aspect ratio than the typical components of cementitous compositions. This disparity in aspect ratio makes uniform incorporation of reinforcing elements into cementitous compositions, particularly at high volume percentages of reinforcing elements, very difficult.

The present invention relates to a novel, unitized package of elongate reinforcing elements that allows the addition of high volume percentages of reinforcing fibers to castable compositions such as cementitous compositions in a single step while producing a substantially uniform incorporation of the

individual reinforcing elements throughout the cementitous composition without "balling" or similar undesirable agglomeration formation. Preferably, the reinforcing elements are polyolefin, polyester, polyamide, polyimide, or polysulfone polymeric fibers. The present invention also relates to a process for preparing reinforced castable compositions using the unitized package of elongate reinforcing elements of the invention.

As illustrated in Figure 1, the unitized package 10 of the present invention consolidates a multiplicity of primary packages of reinforcing elements 20 in a dispersible containment means 12 that can be added to castable compositions in its entirety. The dispersible containment means comprises compositions whose continuity can be disrupted, at least in part, so as to release the contents of the package, by the combined action of a dispersing agent (such as water, an organic solvent and/or heat) present in or generated by the composition and concurrent mechanical mixing action. Compositions suitable for use in aqueous cementitous compositions include, but are not limited to cellulose based papers, cellulose based papers saturated or coated with water swellable or water dispersible binders, etc. Suitable water swellable or water dispersible binders that can be used in conjunction with the water dispersible containment means include, but are not limited to polysaccharides, gelatin, and poly(meth)acrylic acid. The water swellable or water dispersible binders can be applied to the water dispersible containment means by any of several techniques commonly used to apply binders to paper-like web constructions, including, but not limited to roll coating, squeeze roll saturation, knife coating, and gravure coating processes. The dispersibility, or time required to disrupt the continuity of at least a portion of the unitized package sufficiently to cause its contents to be released, can be controlled by the basis weight of the water dispersible packaging means, the type of binder and the binder incorporation level.

The primary packages of reinforcing elements 20 of Figure 2 which are contained within the unitized package 12 comprise a plurality of elongate reinforcing elements 22 maintained in a close-packed, side-by-side alignment by a perimeter wrap of a primary containment means 24 comprising compositions

whose continuity can be disrupted, at least in part, so as to release the contents of the package, by the combined action of a dispersing agent (e.g., water, an organic solvent and/or heat) present in or generated by the cementitous composition and substantially concurrent mechanical mixing action.

Compositions suitable for use in aqueous cementitous compositions include, but are not limited to cellulose based papers, cellulose based papers saturated with water swellable or water dispersible binders, and water dispersible PSA tape constructions. Suitable water swellable or water dispersible binders that can be used in conjunction with the water dispersible containment means include, but are not limited to polysaccharides, gelatin, and poly(meth)acrylic acid. The water swellable or water dispersible binders can be applied to the water dispersible containment means by any of several techniques commonly used to apply binders to paper-like webs constructions, including, but not limited to roll coating, squeeze roll saturation, knife coating, and gravure coating processes. The dispersibility, or time required to disrupt the continuity of the primary containment means sufficiently to cause the release the reinforcing elements, can be controlled by the basis weight of the water dispersible packaging means, the type of binder and the binder incorporation level.

Cylindrical primary packages of fibrous reinforcing elements 20 can be readily fabricated from a fiber tow or a hank by wrapping the tow or hank with a strip of primary containment means material in a spiral overlap manner to form a core of reinforcing elements 22 with a perimeter wrap of a water dispersible containment means and cutting the tow or hank to produce reinforcing elements of the desired length. The dispersion of the primary packages of reinforcing elements 20 can be extended by utilizing a higher basis weight primary containment means, by utilizing a primary containment means having a higher binder add-on, or simply by increasing the amount of overlap or the number of overlapping layers of the primary containment means 24.

An alternative primary package of reinforcing elements 30 is shown in Figure 3, wherein four separate primary packages of reinforcing elements 20 have been incorporated into a single package by an additional perimeter wrap

34. Perimeter wrap 34 may comprise a separate wrap or, alternatively, it may comprise an extension of the perimeter wrap 24 of one of the packages of reinforcing elements 20. Primary reinforcing element packages 20 may all contain the same reinforcing elements or each package may contain different size reinforcing elements.

A third alternative primary package of reinforcing elements 40 is shown in Figure 4, wherein a central core package of reinforcing elements 42 confined by perimeter wrap 44 is surrounded by a concentric assembly of a second reinforcing element 46 having a different diameter or cross-section. Alternative packaging options illustrated in Figures 3 and 4 allow the introduction of a customized blend of reinforcing elements into a castable composition by the use of a single primary package of reinforcing elements.

Referring to Figure 4, primary containment means 24 may exhibit sufficient cohesive attraction to itself to keep terminal end 48 of the top overlapping strip from unwinding after the fiber tow or hank has been cut to produce primary packages of reinforcing elements. In the event that there is insufficient cohesive attraction between adjacent layers, an optional dispersible adhesive 28 may be applied across the width of outer face 26 of primary containment means 24 as, for example, a strip of a dispersible hot melt adhesive or strip of a dispersible transfer adhesive, as primary containment means 24 is being wrapped around reinforcing elements 46. Dispersible adhesive 28 should be selected so that it is dispersible by the same dispersing agent used to disperse primary containment means 24 or another dispersing agent which is compatible with the castable composition to which the primary package(s) of reinforcing elements is being added.

As shown in Figure 5, which is a fragment of Figure 4 along 55, fibrous reinforcing elements 46 are contained by primary containment means 24. Terminal end 48 of the top overlapping layer of primary containment means 24 is secured to the adjacent layer of primary containment means 24 by an optional strip of dispersible adhesive 28 which forms a strip coextensive with the longitudinal axis of reinforcing elements 46 (more clearly seen by referring

to Figure 4). Dispersible adhesive 28 is preferably applied to the outer face 26 of primary containment means 24 so that it does not contact reinforcing elements 46.

It is also contemplated that a dispersible shrink wrap material might be utilized for the perimeter wrap for the primary containment means. In addition to providing the shrink wrap capability, suitable materials would also have to exhibit substantially similar dispersibility performance to the materials described above.

Regardless of the shape or design of the primary package of reinforcing elements, the perimeter wrap around each package is maintained under sufficient tension to substantially restrict the lateral movement of the elongate reinforcing elements relative to one another. This restriction of lateral movement of reinforcing elements relative to one another is preferred to prevent premature release of the reinforcing elements, either during shipping or during addition to castable compositions. In addition to providing a convenient and organized manner of introducing the reinforcing elements into castable compositions by effecting a significant reduction in the volume of reinforcing elements introduced into compositions at a critical mixing point, the packaging also provides a distinct shipping advantage in that it maintains the reinforcing elements in a configuration that will not permit agglomeration during shipping. Additionally, the primary package is significantly more dense than a comparable volume of unconsolidated elements, thereby allowing a significantly greater weight of elements to be shipped in the same volume occupied by the unconsolidated elements.

Cylindrical packages of reinforcing elements can range in height from about 0.25 cm to about 20 cm, preferably from about 1.0 cm to 10 cm, and from about 0.25 cm to about 20 cm, preferably from about 1.0 cm to 10 cm in diameter. Even though this size range can result in packages having a significant disparity in size and shape relative to other components of typical cementitous compositions, the packages of reinforcing elements are readily mixed into the cementitous compositions in a substantially uniform manner.

Upon disruption of the continuity of the perimeter wrap and the resulting tension it has maintained on the reinforcing elements, the elements are rapidly dispersed into the cementitous mixture with minimal, if any agglomeration. While not being bound by any theory, it is presumed that this lack of agglomeration is due, in part, to the fact that the reinforcing elements are maintained in a organized, substantially parallel arrangement on release. On being released, the elements continue to act in an aligned fashion, further enhancing substantially uniform macro-distribution of the elements throughout the cementitous composition until the individual elements are wetted and dispersed.

It has been observed that even though the perimeter wraps are substantially identical on each primary package of reinforcing elements, they exhibit a range of dispersing times. This range in dispersion times allows the addition of a high concentration of reinforcing elements, in the form of the primary package of reinforcing elements, to cementitous compositions as a single charge. Reinforcing elements are subsequently released from the primary packages in a controlled manner such that there is minimal, if any, agglomeration and the reinforcing elements are distributed throughout the cementitous compositions in a substantially uniform manner.

This proposed incorporation mechanism stands in contrast to the introduction of individual elements into cementitous compositions in a totally random orientation that would allow inter-fiber interactions and subsequent agglomeration of the elements.

In a broader aspect, each of the bundles or primary packages is configured, for example, as a bag or tube which contain the fibers in a substantially unentangled arrangement. Other configurations for the primary package are suitable provided they provide for release of fibers in the desired manner when exposed to dispersion conditions.

Preferably the primary packages of reinforcing elements are free from binders that bind individual reinforcing elements together (ie. inter-element binders). The absence of inter-element binders facilitates a more rapid

dispersion of the elements as the binder does not have to dissolve to allow release of the individual elements.

The present invention also contemplates a process for the incorporation of elongate reinforcing elements into castable compositions, the process comprising the steps of: a) Preparing a mixture of ingredient materials for the castable composition; b) Introducing at least one primary package of elongate reinforcing elements into the mixture, the primary package of reinforcing elements comprising a plurality of elongate reinforcing elements maintained in a close-packed, side-by-side alignment by a primary dispersible containment means, the primary dispersible containment means comprising a perimeter wrap maintained under sufficient tension to restrict lateral movement of said elongate reinforcing elements relative to one another. The continuity of the primary dispersible containment means is capable of being controllably disrupted by dispersion of at least a portion thereof, the dispersion of the primary dispersible containment means being effected by the combined action of a dispersing agent present in the castable composition and substantially concurrent mechanical mixing of the mixture of the at least one primary package of reinforcing elements; c) Mixing the mixture of the castable composition and the at least one primary package of reinforcing elements to distribute substantially uniformly the at least one primary package of reinforcing elements into the castable material and to subsequently disrupt the continuity of the primary dispersible containment means, thus releasing the elongate reinforcing elements into the castable composition; and, d) Continuing to mix the mixture of the castable composition and the elongate reinforcing elements until the elongate reinforcing elements are distributed substantially uniformly throughout the castable composition.

The process contemplates the introduction of one or more unitized packages of reinforcing elements into a castable composition, depending on the level of reinforcing elements required for the composition. A mixture of sizes of reinforcing elements can be introduced into the composition by a) incorporating primary packages of different sized elements in each unitized

package, or b) by utilizing unitized packages containing only one size of reinforcing elements, but adding unitized packages containing different sized elements in the appropriate ratio to achieve the desired final composition.

In another embodiment, the process also contemplates the addition of primary packages of reinforcing elements as individual bundles or packages rather than using the unitized package previously described. Customized reinforcing element blends could readily be prepared using individual primary packages simply by weighing or counting out the appropriate number of primary packages of differing size or structure and adding the mixture to the castable composition. Mixing times might be shortened using this embodiment as additional time to disrupt the continuity of the unitized package would not be required.

The dispersing agent may be present in the mix of components of the castable composition (water in the case of a cementitous composition) prior to the addition of the unitized package of reinforcing elements, or, alternatively, the dispersing agent may be added to the castable composition subsequent to the addition of the unitized package of reinforcing elements. Addition of the dispersing agent subsequent to the addition of the unitized package can afford a longer time for the unitized packages to be substantially uniformly incorporated into the castable composition before initiating the disruption of the dispersible packaging means and the perimeter wrap material. In either case, mechanical mixing action supplied by the mixing of the mixture of the unitized package and the castable composition substantially concurrent with the presence of the dispersing agent is required to achieve dispersion of both the packaging means and the primary containment means materials.

It is desirable to control the dispersion time of the perimeter wrap so that the disruption of its continuity does not occur prior to the disruption of the continuity of the packaging means. Premature release of the reinforcing elements while they are still contained within the unitized package could result in undesirable agglomeration of the reinforcing elements.

In a broader aspect, each of the bundles or primary packages used in the process of the invention is configured, for example, as a bag or tube which contain the fibers in a substantially unentangled arrangement.

Preferably, each bundle or primary package contains greater than about 50 fibers or reinforcing elements and most preferably contains between about 100 and about 10,000 fibers or reinforcing elements.

It should be understood that the present invention contemplates the use of the unitized package of reinforcing elements and the process of incorporating the reinforcing elements into other castable compositions, including, but not limited to reinforced polymeric compositions (either thermoplastic or thermoset compositions) and ceramics. When non-aqueous based compositions are utilized, alternative packaging and perimeter wrap materials whose continuities can be disrupted by dispersing agents compatible with the castable composition would be substituted for the water dispersible packaging and perimeter wrap materials. A representative nonaqueous construction incorporates a polystyrene perimeter wrap for use in a styrene based composition. When bituminous or other hot reinforced compositions are utilized, heat generated by the castable composition may be used as the dispersing agent. It should also be understood that packaging and perimeter wrap materials which are sensitive to dispersing agents other than water can be utilized in aqueous based castable compositions as long as the dispersing agent is compatible with the castable composition.

EXAMPLES

Reinforcing Fiber I

Drawn polypropylene fibers (4:1 draw ratio) having a diameter of 0.81 mm (0.032 inches) was cut into 5.1 cm (2.0 inch) lengths and stored in a plastic bag for later use. The density of the loose fibers was approximately 50 gm/liter (0.5 lb/gallon)

Reinforcing Fiber II

Drawn polypropylene fibers (4:1 draw ratio) having a diameter of 0.13 - 0.2 mm (0.005 - 0.08 inches, available from Katema Co., Specialty Filaments

Division, Odenton, MD) was cut into 5.1 cm (2.0 inch) lengths and stored in a plastic bag for later use.

Reinforcing Element Package I

Approximately 180 cm (71 inches) long samples of Reinforcing Fiber I were formed into hanks of approximately 5.1 cm (2.0 inches) in diameter and wrapped with 5.1 cm (2.0 inch) wide 3M Brand Repulpable Tape #9023 (an alkali dispersible tape available from 3M, St. Paul, MN) in a spiral wrap with an approximately 0.6 cm (0.25 inch) overlap on each wrap. The wrapped hank was then cut into 5.1 cm (2.0 inch) lengths using a guillotine cutter to obtain bundles of reinforcing fibers. The density of the fiber bundle was approximately 20 gm/liter (2.4 lb/gallon).

Reinforcing Element Package II

Reinforcing Element Package II was formed according to the procedure used for Reinforcing Element Package I except that Reinforcing Fiber II was used as the fiber.

Example 1

A mortar mix comprising Portland cement (22 kg, 48 pounds), sand (123 kg, 270 pounds) and water (17 kg, 38 pounds) was added to a 0.17m^3 (6 ft^3) capacity concrete mixer and mixed until a homogeneous mixture was obtained. Reinforcing Element Package I (3.5 kg, 7.7 pounds, 7 volume percent) were added to the mixture as a single charge. The packages were observed to uniformly mix into the mortar mix and then break open, releasing the reinforcing fibers over a period of approximately 7 minutes. Mixing was continued for an additional 20 minutes, or a total mixing time of about 30 minutes. Minimal free fibers were observed in the mix and there was no evidence of fiber ball formation.

Comparative Example C-1

The procedure of Example 1 was repeated except that the reinforcing fiber was added as loose fibers. Loose Reinforcing Fiber I (3.5 kg, 7.7 pounds, 7 volume percent) was added to the mortar mixture in approximately 0.25 kg increments and the mixture allowed to mix for approximately 4 minutes

before the next increment was added. The total mixing time was about 60 minutes. If the loose fibers were added in any larger increments they irreversibly agglomerated into fiber balls.

Example 2

Reinforcing Fiber I, (61 kg, 135 pounds, 3 volume percent) was added to a 2.3 m^3 (3 yd^3) high strength concrete mix comprising sand (2,333 kg, 5138 pounds), coarse aggregate (1,702 kg, 3750 pounds), Portland cement (810 kg, 1782 pounds), water (359 kg, 789 pounds), fly ash (205 kg, 450 pounds), water reducer (6 liters, 204 ounces) and an air entrainment additive (0.41 liters, 14 ounces) in a Ready Mix truck in a slow continuous manner over a 30 minute period. The resulting composition was mixed for an additional 10 minutes, after which approximately 1.5 m^3 (2 yd^3) of the mix was removed. Some irreversible agglomeration of fibers into balls was observed even though the fibers were carefully added over a period of approximately 30 minutes. An additional 7 kg (15 pounds) of Reinforcing Element Package I, which corresponded to an additional 1 volume percent, were added to the remaining 0.76 m^3 (1 yd^3) as a single charge and mixing continued an additional 20 minutes. No additional fiber balling was observed subsequent to the addition of the packages of reinforcing elements, even though the concrete mix was in an unstable condition which would promote ball formation.

Example 3

The procedure of Example 1 was repeated except that Reinforcing Element Package II (1.1 kg, 2.4 pounds, 2 volume percent) was added to the mix as a single charge. The packages were uniformly mixed into the composition and began to break open and release the fibers after a period of approximately 3 minutes. A visual examination of the mix after mixing an additional 7 minutes (10 minutes total mixing time) showed no evidence of unopened packages of reinforcing elements. Samples were taken from the mix after a total mixing time of approximately 20 minutes, the samples cast and cured and subsequently examined for fiber distribution in the mix. Examination

of the cast samples showed uniform fiber distribution and no evidence of fiber ball formation.

Comparative Example C-2

The procedure of Example 3 was repeated except that the reinforcing fiber was added as loose fibers. Loose, unentangled Reinforcing Fiber II (.51 kg, 1.1 pound, 1 volume percent) was added to the mortar mixture in approximately 0.26 kg increments (0.5 pounds) and the mixture allowed to mix for approximately 10 minutes before the next increment was added. The total mixing time was about 20 minutes. Attempts to add more loose fiber to reach a 1.5 vol. % fiber resulted in fiber ball formation. Even though a smaller amount of fiber was added to the mix over a longer period of time, the resulting mix showed evidence of undesirable fiber agglomeration as compared to Example 3.

Example 4

A Pug Mill was charged with 7000 pounds (3180 kg) of a "driveway mix" consisting of a 50/50 mix of course and fine aggregate and a 5.5% by weight of asphalt maintained at about 370°F (188°C). A garbage bag containing approximately 7 pounds (3.2 kg) of polyethylene wrapped nylon fibers as described in Reinforcing Element Package III above was added through an inspection port and allowed to mix for approximately one minute, during which both the unitizing package and the primary containment package melted to release the reinforcing fibers into the asphalt. The asphalt was tested using an asphalt paver, and it was found that the fibers were mixed uniformly throughout the asphalt. Minimal free fibers were observed in the mix and there was no evidence of fiber ball formation.

Comparative Example C-3

The procedure of Example 4 was repeated except that seven pounds (3.2 kg) of loose Nylon fibers as described in Reinforcing Fiber III above were added in a 30 gallon (132 liter) polyethylene garbage bag. The asphalt was again tested using an asphalt paver, and it was found that many of the fibers had not mixed in, and instead were found to be in the form of entangled balls

having a diameter of about 2-3 inches (5.1-7.6 cm). The balls did not contain asphalt in their centers and caused blistering of the pavement.

WHAT IS CLAIMED IS:

1. A unitized package of reinforcing elements for castable compositions comprising a liquid/solid or liquid mixtures, said unitized package comprising a dispersible packaging means, the dispersion of said packaging means effected by the combined action of a dispersing agent present in said castable composition and substantially concurrent mechanical mixing of the mixture of said castable composition and said unitized package, said packaging means enclosing or consolidating a multiplicity of primary packages of polymeric reinforcing elements, said primary packages of reinforcing elements comprising a plurality of elongate reinforcing elements maintained in a close-packed, side-by-side alignment by a primary dispersible containment means, said primary containment means comprising a perimeter wrap maintained under sufficient tension to substantially restrict lateral movement of said elongate reinforcing elements relative to one another, the continuity of said primary containment means capable of being controllably disrupted by dispersion of at least a portion thereof, said dispersion of said primary containment means effected by from the combined action of a dispersing agent present in said castable composition and substantially concurrent mechanical mixing of the mixture of said packages of reinforcing elements in said castable composition to release said elongate reinforcing elements and allow substantially uniform mixing of same into said castable composition.

2. A unitized package of reinforcing elements according to Claim 1 wherein said castable composition comprises a cementitous material such as mortar or concrete.

3. The unitized package of reinforcing elements according to Claim 1, wherein said elongate reinforcing elements are free of inter-element binders.

4. A process for preparing a castable composition comprising a liquid/solid or liquid mixture, said mixture comprising a multiplicity of elongate reinforcing elements, said process comprising the steps of:

a) preparing a mixture of ingredient materials for said castable composition;

b) introducing into said mixture at least one primary package of elongate reinforcing elements, said primary package of polymeric reinforcing elements comprising a plurality of elongate reinforcing elements maintained in a close-packed, side-by-side alignment by a primary dispersible containment means, said primary containment means comprising a perimeter wrap maintained under sufficient tension to substantially restrict lateral movement of said elongate reinforcing elements relative to one another, the continuity of said primary containment means capable of being controllably disrupted by dispersion of at least a portion thereof, said dispersion of said primary containment means effected by the combined action of a dispersing agent present in said castable composition and substantially concurrent mechanical mixing of the mixture of said primary packages of reinforcing elements;

c) mixing said mixture of said castable composition and said at least one primary package of reinforcing elements to distribute substantially uniformly said at least one primary package of reinforcing elements into said castable material and to subsequently disrupt the continuity of said primary containment means, thus releasing said elongate reinforcing elements into said castable composition; and

d) continuing to mix said mixture of said castable composition and said elongate reinforcing elements until said elongate reinforcing elements are distributed substantially uniformly throughout said castable composition.

5. A process for preparing a mixture of a castable composition comprising a liquid/solid or liquid mixture, said mixture comprising a

multiplicity of elongate reinforcing elements, said process comprising the steps of:

a) preparing a mixture of ingredient materials for said castable composition;

b) introducing into said mixture at least one unitized package of elongate reinforcing elements, said unitized package comprising a dispersible packaging means, the dispersion of said dispersible packaging means effected by the combined action of a dispersing agent present in said castable composition and substantially concurrent mechanical mixing of the mixture of said castable composition and said unitized package, said packaging means consolidating a multiplicity of primary packages of reinforcing elements, said primary packages of reinforcing elements comprising a plurality of elongate reinforcing elements maintained in a close-packed, side-by-side alignment by a primary dispersible containment means, said primary containment means comprising a perimeter wrap maintained under sufficient tension to substantially restrict lateral movement of said elongate reinforcing elements relative to one another, the continuity of said primary containment means capable of being controllably disrupted by dispersion of at least a portion thereof, said dispersion of said primary containment means effected by the combined action of a dispersing agent present in said castable composition and substantially concurrent mechanical mixing of the mixture of said primary packages of reinforcing elements in said castable composition;

c) mixing said mixture of said castable composition and said at least one unitized package of elongate reinforcing elements to disrupt the continuity of said at least one unitized package of reinforcing elements to distribute substantially uniformly said primary packages of elongate reinforcing materials into said castable composition and to subsequently disrupt the continuity of said primary containment means,

thus releasing said reinforcing elements into said castable composition; and

d) continuing to mix said mixture until said reinforcing elements are distributed substantially uniformly throughout said mixture.

6. The process according to Claim 5 wherein said at least one unitized package of elongate reinforcing elements is introduced into said castable composition and the mixing continued a sufficient time to distribute substantially uniformly said at least one package of elongate reinforcing elements in said mix prior to the disruption of said primary containment means.

7. The process according to Claim 5 wherein said dispersing agent is present in said castable composition prior to the introduction of said at least one unitized package of elongate reinforcing elements and the mixing continued a sufficient time to distribute substantially uniformly said at least one package of elongate reinforcing elements in said mix prior to the disruption of said primary containment means.

8. The process according to Claim 5 wherein said dispersing agent is introduced into said castable composition subsequent to the introduction of said at least one unitized package of elongate reinforcing elements and the mixing continued a sufficient time to distribute substantially uniformly said at least one package of elongate reinforcing elements in said mix prior to the disruption of said primary containment means.

9. The process according to Claim 5 wherein said elongate reinforcing elements are free of any inter-element binders.

10. A plurality of fiber bundles releasably held together in the form of a dispersible unitized package,

each of said bundles comprising a plurality of high aspect ratio polymeric fibers maintained in a substantially unentangled arrangement substantially free of inter-fiber binding,

each of said bundles being adapted to release fibers from said bundles when said package is introduced into a castable composition under dispersion conditions such that said fibers are released substantially unentangled into said castable composition.

11. The unitized package of claim 10 wherein said fibers comprise polyolefin fibers.

12. The unitized package of claim 10 wherein said castable composition comprises a cementitious composition.

13. A method for reinforcing a castable composition comprising the steps of:

introducing into a castable composition under dispersion conditions a dispersible fiber bundle comprising a plurality of high aspect ratio polymeric fibers maintained in a substantially unentangled arrangement substantially free of inter-fiber binding,

releasing fibers from said bundle into said castable composition in a substantially unentangled manner.

14. The method of claim 13 wherein said dispersion conditions comprise mechanical agitation of said castable composition.

15. The method of claim 13 wherein said dispersion conditions comprise one or more dispersing agents incorporated in said castable composition.

16. The method of claim 15 wherein said dispersing agent is water or an organic solvent contained in said castable composition.

17. The method of claim 13 wherein said dispersion conditions comprise heat generated by said castable composition.

18. The method of claim 17 wherein said castable composition is a bituminous composition.

19. The method of claim 13 wherein said castable composition comprises a cementitious composition.

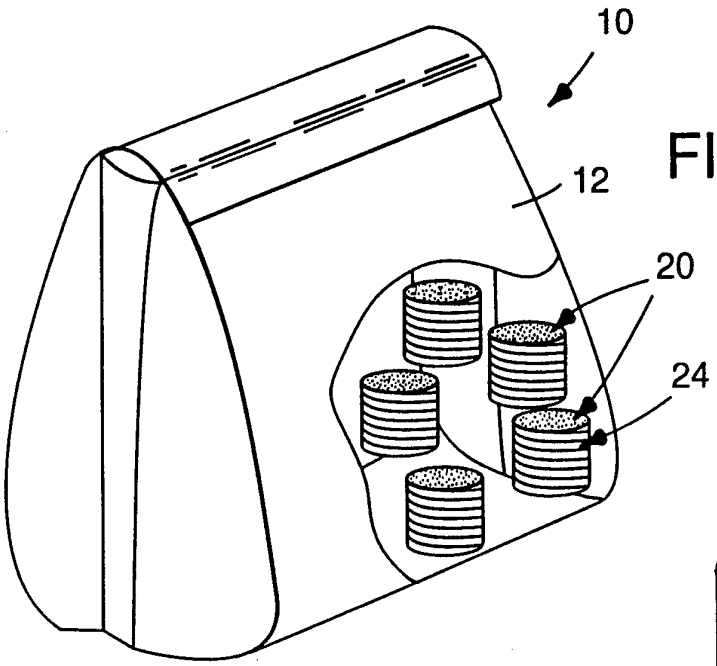

FIG.1

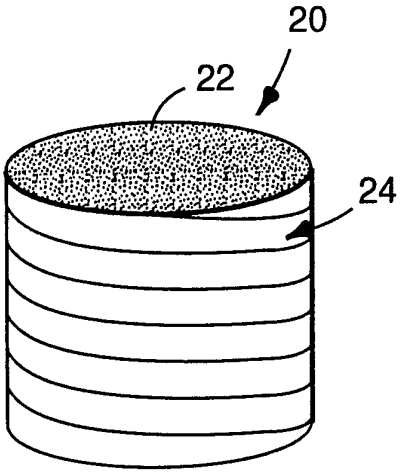

FIG.2

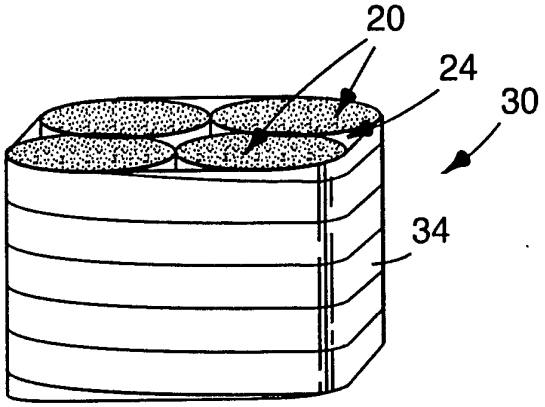

FIG.3

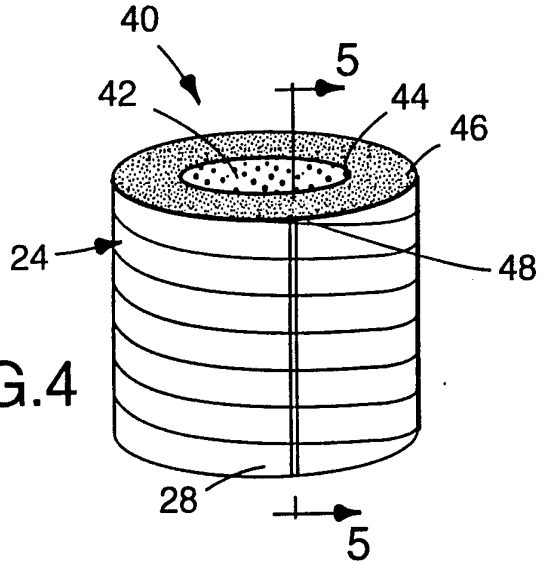

FIG.4

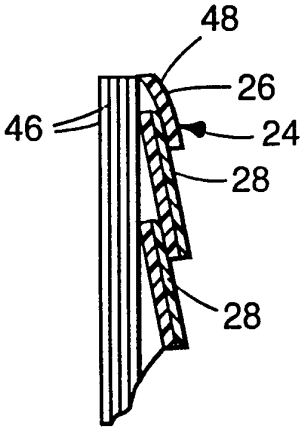

FIG.5

INTERNATIONAL SEARCH REPORT

Interr nal Application No
PCT/US 94/04856

A. CLASSIFICATION OF SUBJECT MATTER
IPC 5 E04C5/07 E04C5/01 C04B18/02 B28B17/02 B28B1/52 B65D65/46

According to International Patent Classification (IPC) or to both national classification and IPC

B. FIELDS SEARCHED

Minimum documentation searched (classification system followed by classification symbols)
IPC 5 E04C C04B B28B B65D B28C

Documentation searched other than minimum documentation to the extent that such documents are included in the fields searched

Electronic data base consulted during the international search (name of data base and, where practical, search terms used)

C. DOCUMENTS CONSIDERED TO BE RELEVANT

Category °	Citation of document, with indication, where appropriate, of the relevant passages	Relevant to claim No.
Y	GB,A,2 231 574 (NV BEKAERT) 21 November 1990 see page 2, line 4 - line 32 see page 5, line 8 - page 6, line 21	1-19
P,Y	DE,C,42 14 540 (BAUMHÜTER GMBH) 17 June 1993	1-12
P,A	see column 1, line 1 - line 30 see column 1, line 65 - column 2, line 43; figures	13-19
Y	FR,A,1 534 302 (SHELL) 26 July 1968 see page 1, column 1, paragraph 2 - column 2, line 3	13-19

-/--

[X] Further documents are listed in the continuation of box C.

[X] Patent family members are listed in annex.

° Special categories of cited documents :

"A" document defining the general state of the art which is not considered to be of particular relevance

"E" earlier document but published on or after the international filing date

"L" document which may throw doubts on priority claim(s) or which is cited to establish the publication date of another citation or other special reason (as specified)

"O" document referring to an oral disclosure, use, exhibition or other means

"P" document published prior to the international filing date but later than the priority date claimed

"T" later document published after the international filing date or priority date and not in conflict with the application but cited to understand the principle or theory underlying the invention

"X" document of particular relevance; the claimed invention cannot be considered novel or cannot be considered to involve an inventive step when the document is taken alone

"Y" document of particular relevance; the claimed invention cannot be considered to involve an inventive step when the document is combined with one or more other such documents, such combination being obvious to a person skilled in the art.

"&" document member of the same patent family

Date of the actual completion of the international search	Date of mailing of the international search report
7 September 1994	05 -10- 1994

Name and mailing address of the ISA	Authorized officer
European Patent Office, P.B. 5818 Patentlaan 2 NL - 2280 HV Rijswijk Tel. (+31-70) 340-2040, Tx. 31 651 epo nl, Fax: (+31-70) 340-3016	Righetti, R

Form PCT/ISA/210 (second sheet) (July 1992)

INTERNATIONAL SEARCH REPORT

Interr nal Application No
PCT/US 94/04856

C.(Continuation) DOCUMENTS CONSIDERED TO BE RELEVANT

Category °	Citation of document, with indication, where appropriate, of the relevant passages	Relevant to claim No.
A	US,A,4 314 853 (MOENS) 9 February 1982 cited in the application see abstract; figures 2,4	1,2,4-8, 10, 12-16,19
A	WO,A,92 17381 (RHONE-POULENC) 15 October 1992 see abstract; claim 3; figures	1,4
A	EP,A,0 235 577 (MONTEFIBRE SPA) 9 September 1987 see page 1, paragraph 2 - page 3, paragraph 2 see page 5, last paragraph - page 8, last paragraph	1,4
A	FR,A,1 026 125 (BANKS) 23 April 1953 see page 1, column 2, last paragraph - page 2, column 1; figures	1,10
A	US,A,3 063 558 (M. LESSER ET AL.) 13 November 1962 see column 2, line 57 - line 66; figure 1	1
A	DE,A,31 46 261 (IMCHEMIE KUNSTSTOFF) 1 June 1983 see page 19, line 26 - page 21, line 14; figures	1

1

INTERNATIONAL SEARCH REPORT

Information on patent family members

International Application No
PCT/US 94/04856

Patent document cited in search report	Publication date	Patent family member(s)	Publication date
GB-A-2231574	21-11-90	NL-A- 8901216	17-12-90
		CA-A- 2016299	16-11-90
		CH-A- 682150	30-07-93
		DE-A- 4014892	22-11-90
		FR-A- 2647130	23-11-90
		JP-A- 3069539	25-03-91
		LU-A- 87736	16-12-91
		SE-A- 9001610	17-11-90
DE-C-4214540	17-06-93	NONE	
FR-A-1534302		BE-A- 702647	14-02-68
		DE-A- 1671068	26-08-71
		GB-A- 1130612	
		NL-A- 6711139	16-02-68
		US-A- 3591395	06-07-71
US-A-4314853	09-02-82	GB-A- 1465271	23-02-77
		AT-B- 344961	25-08-78
		AU-A- 6755274	09-10-75
		BE-A- 813569	31-07-74
		CA-A- 1037733	05-09-78
		CH-A- 603328	15-08-78
		DE-A,B,C 2416633	17-10-74
		FR-A,B 2225392	08-11-74
		JP-C- 1287059	31-10-85
		JP-A- 56017121	18-02-81
		JP-B- 60009976	14-03-85
		JP-C- 1080441	25-01-82
		JP-A- 50048026	28-04-75
		JP-B- 56018553	30-04-81
		LU-A- 69854	18-07-74
		NL-A- 7405140	18-10-74
		SE-B- 416334	15-12-80
		US-A- 4284667	18-08-81
		US-A- 4224377	23-09-80
WO-A-9217381	15-10-92	US-A- 5222595	29-06-93
		AU-A- 1539992	02-11-92
		AU-A- 1755192	02-11-92

INTERNATIONAL SEARCH REPORT

Information on patent family members

Inter onal Application No
PCT/US 94/04856

Patent document cited in search report	Publication date	Patent family member(s)	Publication date
WO-A-9217381		AU-A- 1762292	02-11-92
		BR-A- 9205838	05-07-94
		BR-A- 9205843	26-07-94
		BR-A- 9205844	26-07-94
		CA-A- 2084306	05-10-92
		CN-A- 1066826	09-12-92
		CN-A- 1065575	28-10-92
		CN-A- 1068794	10-02-93
		CZ-A- 9302050	16-03-94
		EP-A- 0577702	12-01-94
		EP-A- 0579741	26-01-94
		EP-A- 0577755	12-01-94
		HU-A- 65187	02-05-94
		HU-A- 65286	02-05-94
		NZ-A- 242181	26-07-94
		NZ-A- 242215	26-07-94
		NZ-A- 242216	27-06-94
		PT-A- 100334	29-04-94
		PT-A- 100335	29-04-94
		US-A- 5280835	25-01-94
		WO-A- 9217383	15-10-92
		WO-A- 9217385	15-10-92
		US-A- 5323906	28-06-94
		US-A- 5139152	18-08-92
		US-A- 5253759	19-10-93
		US-A- 5224601	06-07-93
EP-A-0235577	09-09-87	AT-T- 108812	15-08-94
		CA-A- 1295515	11-02-92
		DE-D- 3750232	25-08-94
		JP-A- 62235237	15-10-87
		US-A- 4820585	11-04-89
FR-A-1026125		NONE	
US-A-3063558		NONE	
DE-A-3146261	01-06-83	NONE	