June 1, 1943. J. BRENZINGER 2,320,712

BLANK SEPARATING AND FEEDING DEVICE

Filed March 13, 1942 3 Sheets-Sheet 1

Fig. 1

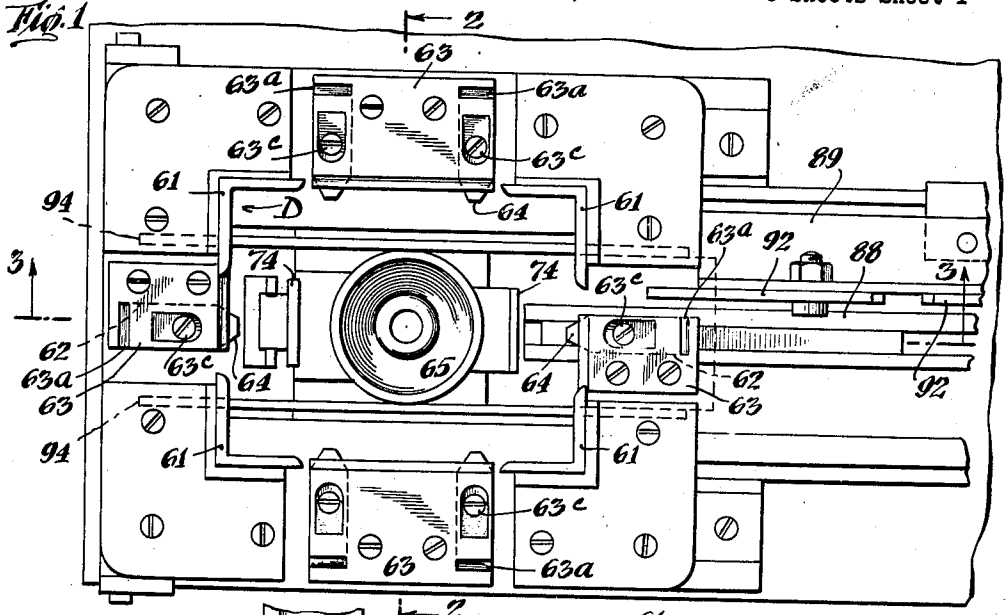

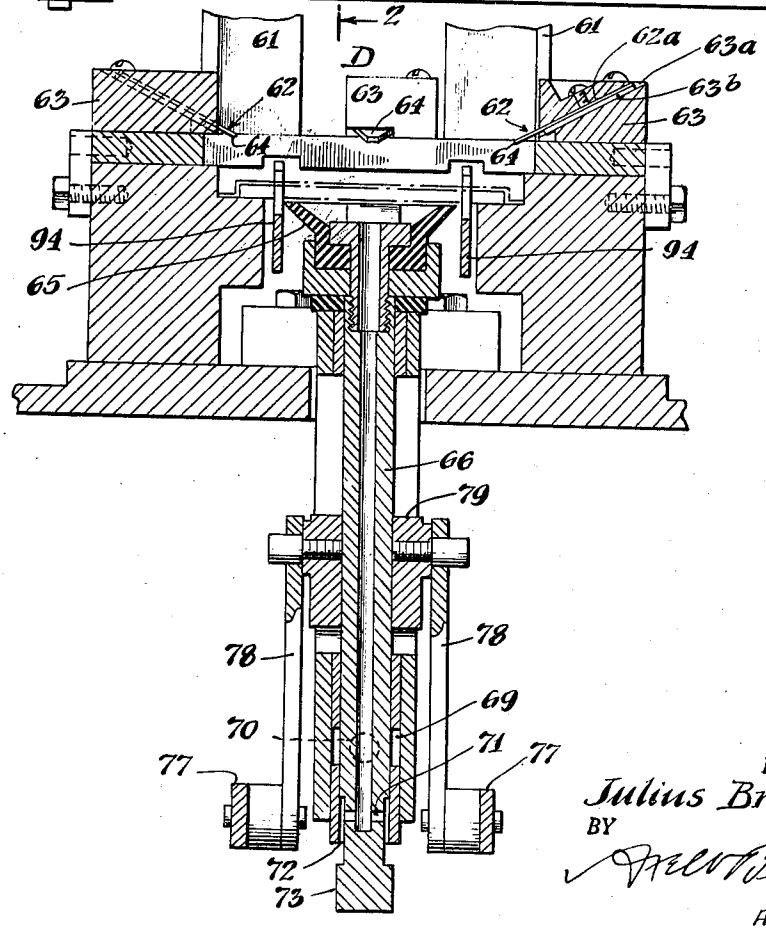

Fig. 2

INVENTOR.
Julius Brenzinger
BY
[signature]
ATTORNEY

June 1, 1943. J. BRENZINGER 2,320,712

BLANK SEPARATING AND FEEDING DEVICE

Filed March 13, 1942 3 Sheets-Sheet 2

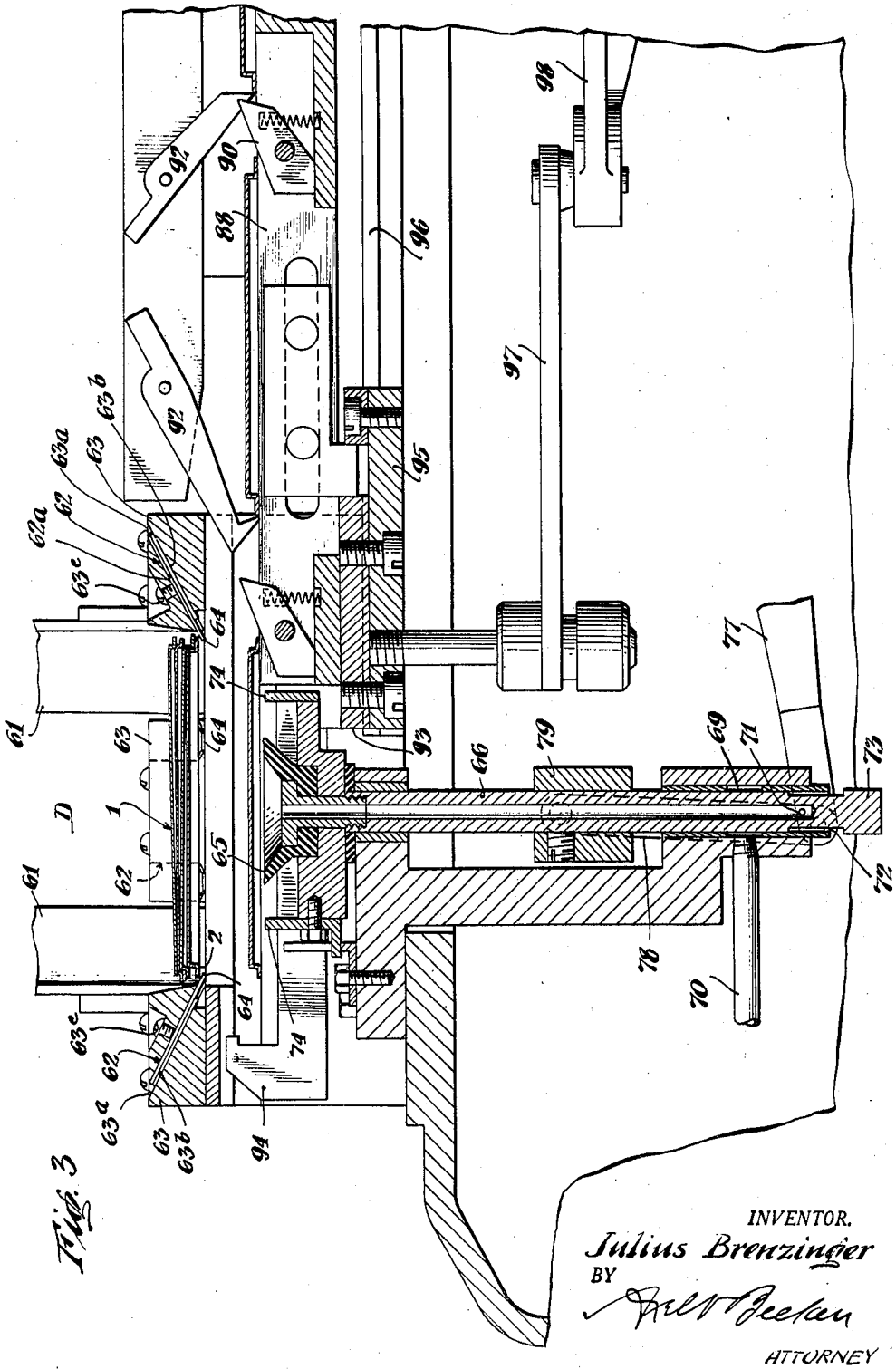

Fig. 3

INVENTOR.
Julius Brenzinger
BY
ATTORNEY

June 1, 1943. J. BRENZINGER 2,320,712

BLANK SEPARATING AND FEEDING DEVICE

Filed March 13, 1942 3 Sheets-Sheet 3

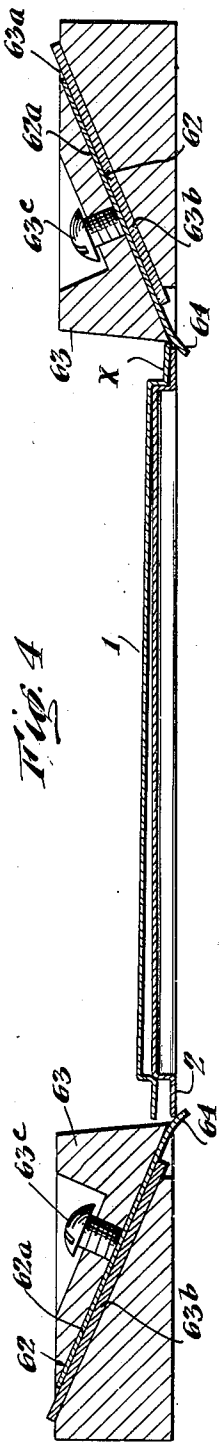

Fig. 4

Fig. 6

Fig. 8

Fig. 9

Fig. 5

Fig. 7

INVENTOR.

Julius Brenzinger

BY

ATTORNEY

Patented June 1, 1943

2,320,712

UNITED STATES PATENT OFFICE

2,320,712

BLANK SEPARATING AND FEEDING DEVICE

Julius Brenzinger, Fairfield, Conn., assignor to The Max Ams Machine Company, Bridgeport, Conn., a corporation of New York

Application March 13, 1942, Serial No. 434,589

1 Claim. (Cl. 312—43)

This invention relates to a device for separating and feeding blanks, such as can-ends, from a stack, and the instant application is a continuation in part of one filed November 14, 1940, Ser. No. 365,622, now Patent No. 2,288,224 of June 30, 1942, and is a continuation in part of another one filed March 28, 1941, Ser. No. 385,644.

Blanks, such as can-ends, do not always nest evenly in supporting stacks. This is particularly true in the case of can-ends of relatively large size and of non-circular form which tend to warp out of their own plane, the warping sometimes being in one direction and sometimes in another. Consequently, adjacent can-ends in the same stack may be close together at one point of their perimeter and widely separated at another. This increases the difficulty of separating the can-ends, and tends to render separating means, the construction and operation of which is predicated upon a fairly uniform stacking of the blanks, ineffective.

The main object and feature of the invention is the provision of means that will separate can-ends of non-uniform character or can-ends that are not uniformly stacked.

In the accompanying drawings the invention is disclosed in a concerte and preferred form in which:

Fig. 1 is a top plan view of the stack of the invention and adjacent elements;

Fig. 2 is a vertical transverse sectional view substantially on the plane of line 2—2 of Fig. 1;

Fig. 3 is a vertical longitudinal sectional view substantially on the plane of line 3—3 of Fig. 1;

Figs. 4, 5 and 6 are diagrammatic views showing various stages of separating the lowermost blank or can-end from the stack;

Fig. 7 is a view similar to Fig. 4 but showing the employment of a pair of springs instead of a single spring; and

Figs. 8 and 9 are plan views showing various forms of springs that can be used in connection with the invention.

Can-ends 1 are here provided with a rim 2 and are contained in stack D, from which latter they are to be separated one by one and fed to a machine for performing an operation on said can-ends. An example of such machine is shown in application Ser. No. 365,622 above referred to.

Stack D is here provided with upright walls 61 and, adjacent its lower end, has a plurality of flat, stiff spring members 62 that are inclined in a downward and inward direction. The main portion 62*a* of each of these spring members is located externally of the stack and only the lower free end 64 of each spring member protrudes downwardly into the plane of the stack adjacent the lower end thereof. Suitable clamping means, located externally of the stack, are provided for each spring consisting here of a block 63 having a diagonal slot 63*a* in which the spring and a backing or spacing member 63*b* are seated, being held in position by a screw 63*c*.

Covers or can-ends 1 rest on protruding lips 64 and, in the present instance, a suction cup 65 is used to separate the can-ends from the stack and to pull them, one by one, past spring lips 64. The can-ends, in passing spring lips 64, flex the latter and it will now be apparent that, after loosening screw 63*c*, the position of spring 62 or of backing member 63*b*, or of both can be adjusted. By the adjustment above described, three things can be accomplished: The amount of the protrusion of lips 64 into the stack can be varied without varying the extent of flexing of spring 62; the extent of flexing of the spring can be changed without varying the amount of protrusion of lips 64; and the amount of protrusion of lips 64 and the extent of flexing of spring 62 can both be varied. The control of the arc of flexing is important because it controls the rebound of the spring, and this rebound is important, as will be understood from the following: If the can-ends are warped and/or are nested unevenly, the edge of flange 2, owing to the tilted position of the can-end, will at one side be displaced inwardly and downwardly, so to speak, as shown at X in Fig. 4, and it will therefore not be possible to separate adjacent can-ends at that point, unless some force is used. This force is imparted to the can-ends by the rebound of the spring members which jars the can-ends and therefore assists in separating adjacent can-ends at all points of their perimeter and thus permits a single can-end to be withdrawn from the stack. Backing member 63*b* is of heavier stock than spring member 62 and the adjusted relation of said two members therefore adequately controls the extent of flexing. In the case of large, warped can-ends, it is preferred to use a pair of superimposed and spaced springs in connection with each clamping means. Such a construction is shown in Fig. 7 where, in addition to spring member 62, a second spring member 62*b* is provided, the two spring members being separated by a spacing member 63*d*. It will be apparent that the amount of protrusion and the extent of the arc of flexing of each spring member can be separately adjusted. The object of having two spring members is to prevent the

simultaneous withdrawal of two can-ends in case one corner of two can-ends slips past the upper spring member. In such cases, the second can-end will be caught by the lower spring. The shape of the spring members may vary. In case a single spring member is used, the shape will preferably be that shown in Fig. 8 where lip 64*a* is pointed. In case a pair of spring members is utilized, as in Fig. 7, upper spring member 62 will preferably take the form shown in Fig. 9, in which a double-prong lip 64*b* is shown, and the lower spring member 62*b* will preferably take the form shown in Fig. 8.

Suction cup 65 is here carried by a hollow stem 66 slidably mounted in bracket 67 of the framework. 68 indicates a stationary sleeve provided with an annular port 69 that is in communication with suction pipe 70, and which sleeve constitutes part of a suitable valve mechanism to make and break the vacuum. Hollow stem 66 has transverse ports 71 near its lower end that connect the interior of said stem with circumferential port 72. It will be understood that, when hollow stem 66 rises, circumferential port 72 comes opposite annular port 69 thereby establishing communication between suction pipe 70 and the interior of stem 66 by way of transverse ports 71, and at the same time closes the lower end of port 72, by means of surface 73, to the atmosphere. At the time this occurs, the suction cup will be in engagement with the under surface of the lowermost can-end of the stack. When the suction cup descends, it will pull said can-end down, hollow stem 66 will bring transverse port 71 out of line with circumferential port 69 and circumferential port 72 will open to the atmosphere thus breaking the vacuum. Thus the up-and-down movement of stem 66 not only causes travel of the suction cup but also actuates the valve mechanism to make and break the vacuum. Associated with the suction cup, and moving up and down with it are can-end supporting members 74 which aid in sustaining the can-end as it is lowered. Suitable means are provided for raising and lowering hollow stem 66, which means, in the present instance, are indicated by arms 77 connected to links 78 that are pivoted to sleeve 79 on stem 66.

Suitable means are provided for advancing the can-end or blank after it has been moved down by suction cup 65. In general, such means consist of a reciprocatory member 88 that extends centrally of the conventional raceway 89 and which is provided with the conventional spring-pressed feeding dogs 90, whereby a can-end is advanced step by step. Associated with the feeding mechanism are stop dogs 92 to prevent retrograde movement of the can-ends or blanks while the feed dogs move back. At the end adjacent stack D, reciprocatory member 88 is provided with a transverse bridge piece 93 carrying two feed members 94, one on each side of suction cup 65 so as to move the can-end or blank from a position directly beneath stack D to a position where the first feed dog 90 can engage it. Suitable means are employed to effect reciprocation of reciprocatory member 88, which means in the present instance take the following form: secured to member 88 is a slide 95, that travels in guides 96, and is operated by links 97 and 98.

The general operation of the device is that suction cup 65 rises and, with it, can-end supporting members 74, to engage the underside of a can-end. The rise of suction cup 65 operates the valve mechanism and cuts on the vacuum so that when said suction cup descends (and with it members 74) it pulls the lowermost can-end past lips 64 of springs 62 and deposits it on suitable supporting ledges of the framework. The descent of the vacuum cup cuts off the vacuum and the cup and members 74 continue their descent so as to clear rim 2 of the can-end. Feed members 94 now advance and carry the can-end one step forward, after which, during the successive movements of the mechanism, said can-end is fed forward by feed dogs 90 in a well-understood manner.

I claim:

In a stack for containing can-ends, from which stack can-ends are to be separated one by one, supporting means for the can-ends including: a plurality of pairs of spring members, each pair consisting of two superimposed and spaced-apart flat, stiff springs, an intermediate spacing member, interposed between the springs of each pair, and means to clamp the spring members of each pair and their intermediate spacing member together.

JULIUS BRENZINGER.