W. J. FUERMANN.
ARTICLE OF JEWELRY.
APPLICATION FILED MAR. 24, 1921.

1,428,158.

Patented Sept. 5, 1922.

Fig. 1.

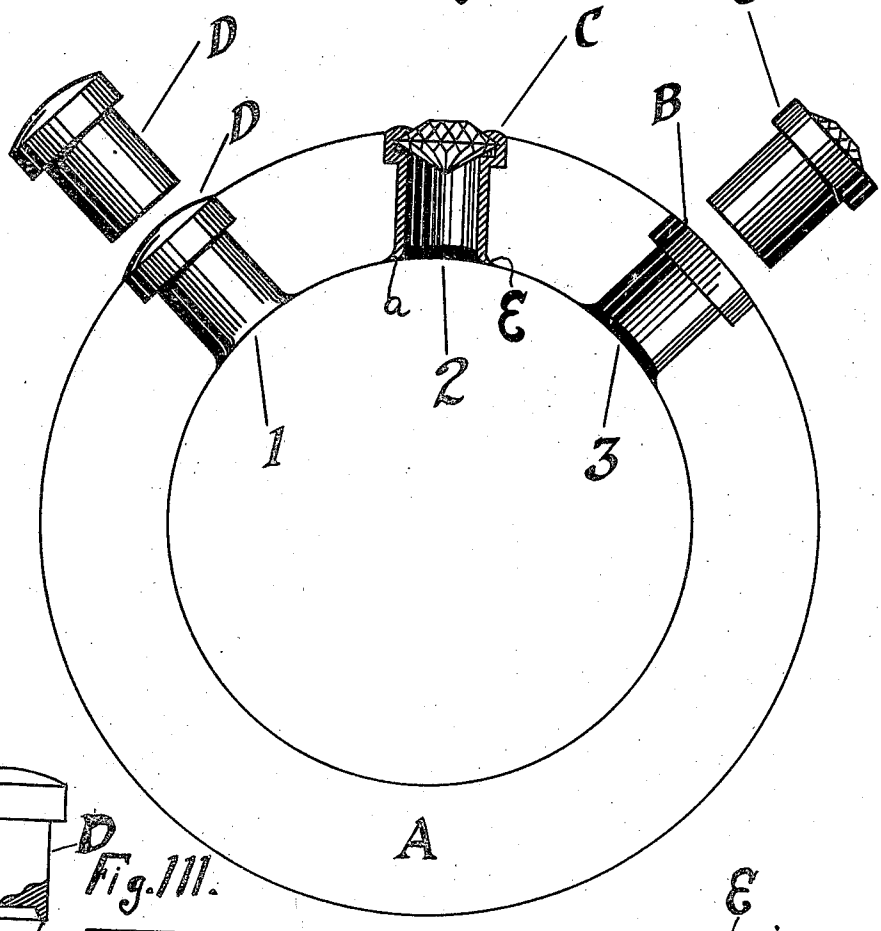

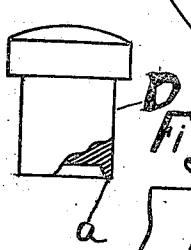

Fig. III.

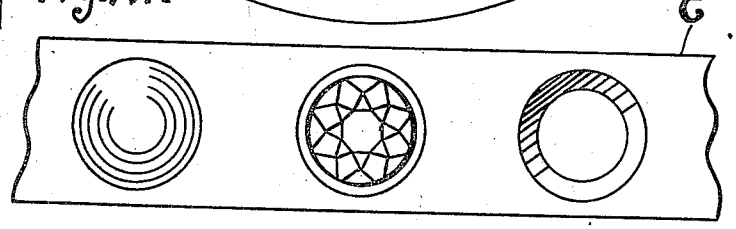

Fig. 11.

Walter J. Fuermann, Inventor:

By His Attorney,

W. H. Swenarton.

Patented Sept. 5, 1922. 1,428,158

UNITED STATES PATENT OFFICE.

WALTER J. FUERMANN, OF BRADFORD, PENNSYLVANIA.

ARTICLE OF JEWELRY.

Application filed March 24, 1921. Serial No. 455,353.

To all whom it may concern:

Be it known that I, WALTER J. FUERMANN, a citizen of the United States, residing at Bradford, county of McKean, and State of Pennsylvania, have invented a new and useful Improvement in an Article of Jewelry, of which the following is a specification.

This invention relates to ornamental jewel-studded rings, in either carved or plain design, and the like and has for its particular objects the construction of a ring so as to adapt the same to serve as an anniversary ring by permitting of the convenient substitution of portions thereof by jewel mountings.

I am aware that the Patents Nos. 836,479 and 1,280,707 disclose jewel-setting constructions which are designed to permit the insertion of a jewel setting either in a ring, comb or the like but in the case where it is attempted to employ in a ring the construction shown in Patent No. 836,479, the boring of a large number of apertures along the periphery of the ring without any reinforcement thereof would result in so mutilating the ring as not only to seriously weaken the ring and thereby affect its rigidity and wearing qualities but in both patents the construction is such that the recesses or apertures would serve as dirt collectors to such an extent as to soon render the ring very unattractive and therefore undesirable for constant wear.

My investigations have led to the discovery of the construction which, while preserving all of the desirable features of the ordinary ring in so far as the strength and freedom from recesses visible from the exterior is concerned, permits of the utilization of such ring as an anniversary ring and thereby enables the purchaser to convert the same, on the installment plan as it were, from a single-stone ring to a multi-jewel-studded ring.

In the accompanying drawings in which I have illustrated a form of the preferred construction of such a ring,

Figure 1 is a side elevation partially in section of such a ring;

Fig. 2 is a fragmentary developed plan view of the exterior peripheral face thereof, and

Fig. 3 is an elevation, partially in section, of a dummy plug therefor, isolated.

Referring to the drawings and the construction shown therein, A designates a band ring provided with a series of similar apertures as 1, 2 and 3 extending completely therethrough. As shown, each aperture is provided with a shoulder B and is of lesser cross-sectional area throughout the greater part of its lower portion than at the upper portion thereof. A tubular jewel setting C having an upper flange portion adapted to conform to and fit upon said shoulder, is adapted to be inserted in one of the apertures in the ring and a removable solid or dummy plug D, having a similar shoulder to that of setting C, is adapted to snugly fit in another aperture of said ring and thereby reinforce and strengthen the same. The bottom portion E of each aperture is reamed to permit of the lower ends of either the tubular jewel setting C or a plug such as D being swedged against the same in order to securely hold the setting or such plug when inserted within the ring apertures.

The top of the dummy plug may be obviously be carved in any suitable manner to conform to the design of the ring for which it is intended or preferably the whole peripheral face of the ring, after the plugs are inserted, may be carved so as to virtually conceal the joint between said plug and said ring and this feature alone adds very greatly not only to the utility but to the appearance of my ring.

Preferably, as shown, the tubular jewel setting is adapted to receive a jewel in the recess formed between the top of said shoulder and the bead or marginal flange of said setting, though obviously separate fingers such as commonly used in the ordinary settings may be employed instead.

Ordinarily a series of apertures will be bored completely around the periphery of my ring and one or more of the same will be fitted with jewel-settings such as C in which a diamond or other rare jewel is secured and all the other recesses will be reinforced with removable dummy plugs, preferably solid, such as the plugs D. Whenever it is desired to add additional jewels, it is merely necessary to force one of more of the dummy plugs out of their respective apertures, which is accomplished by means of any punching device, and a jewel setting containing the desired jewel is then inserted in said aperture and swedged at its lower end by means of a suitable swedging tool so as to prevent accidental displacement thereof.

Various modifications within the scope of

the appended claims may obviously be made without departing from the spirit of my invention.

My improved construction permits of any light from the rear passing through the tubular setting to the jewel and also affords ready access to the rear of the jewel for cleaning purposes.

As shown, the plug members have imperforate metal heads which are designed to effectually cover and conceal the apertures in the ring and said plugs are reamed by means of a suitable reamer to form a tapered annular wall portion *a*.

Having thus described my invention, what I claim is:

1. A finger-ring, comprising an annulus of metal provided along its periphery with a series of spaced apertures extending completely therethrough said apertures being each provided with a shoulder portion, a plurality of plugs having closed ends snugly fitted in certain of said apertures and a jewel setting, having an open lower end and a precious stone mounted at its upper end, snugly fitted and securely held in another of said apertures.

2. In an article of jewelry, the combination comprising a metal band provided with a longitudinal series of perforations therethrough, solid plugs, having closed outer ends, respectively mounted in such perforations and means for preventing accidental displacement of said plugs from said recesses while affording insufficient resistance to prevent the intentional removal of said plugs from said recesses.

3. A plug for anniversary jewelry comprising a shank portion, an enlarged imperforate metal head portion at one end and a relatively thin expansible metal wall at the other end.

4. A finger-ring comprising a metal band having a jewel set therein and a longitudinal series of removable plugs having imperforate outer ends mounted at intervals along the periphery of said ring and means for holding said plugs against accidental displacement.

Signed at Bradford in the county of McKean and State of Pennsylvania this 5th day of March, 1921.

WALTER J. FUERMANN.