Jan. 20, 1959 R. J. WILLIAMS 2,869,772

BAG

Filed March 26, 1956 2 Sheets-Sheet 1

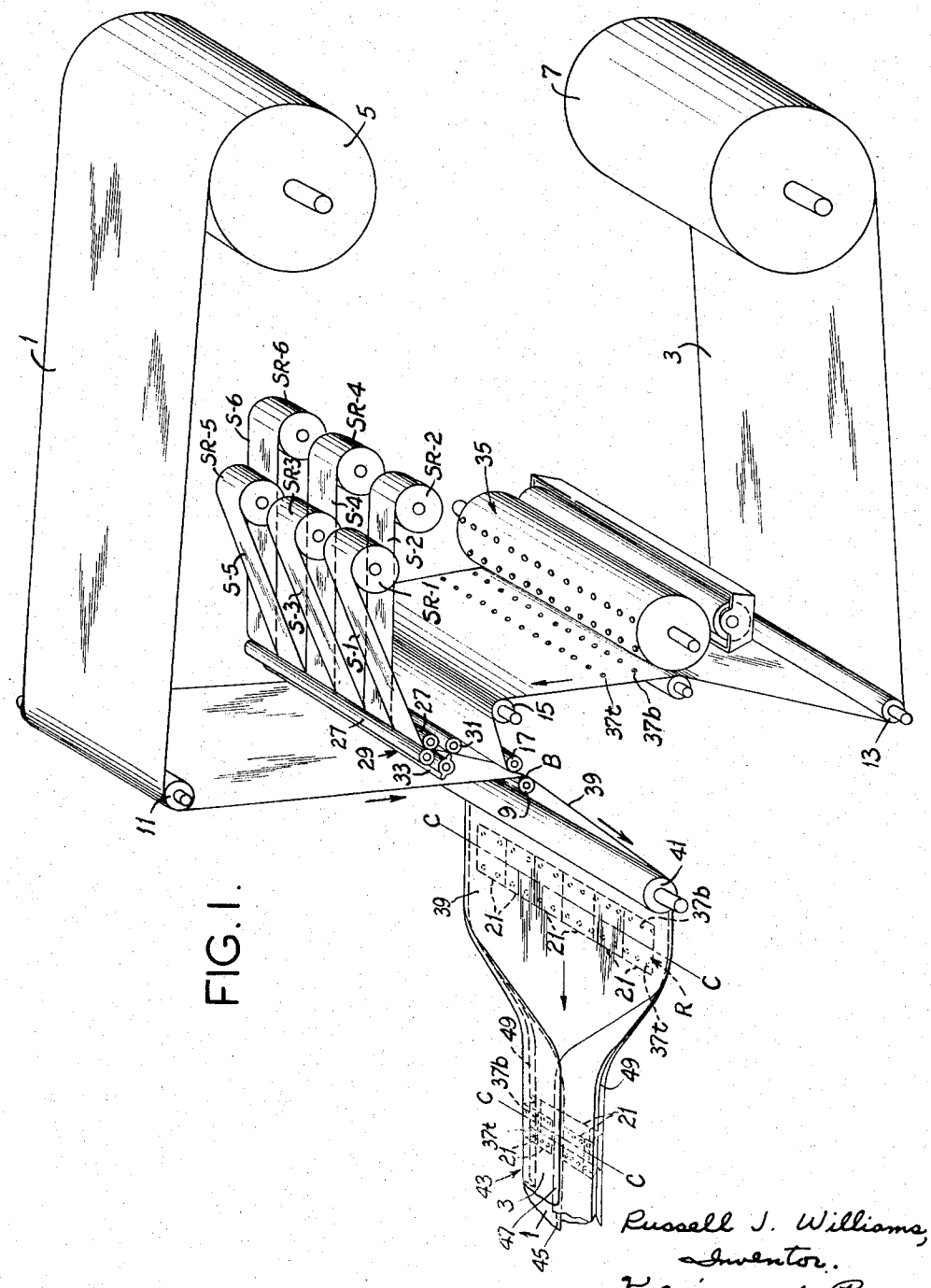

FIG. 1.

Russell J. Williams,
Inventor.
Koenig and Pope,
Attorneys.

Jan. 20, 1959 R. J. WILLIAMS 2,869,772

BAG

Filed March 26, 1956 2 Sheets-Sheet 2

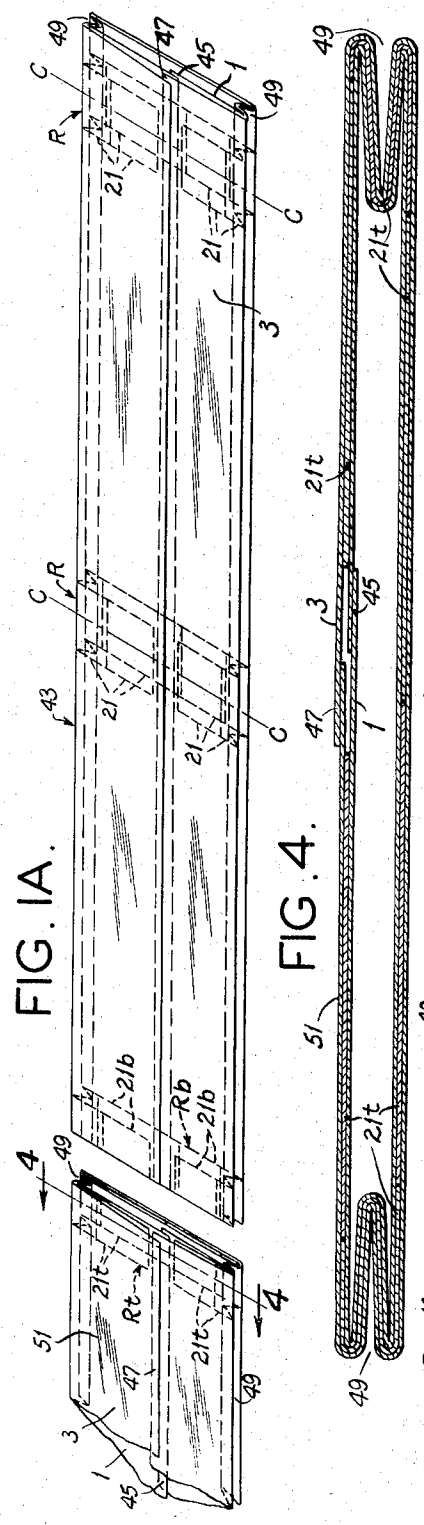

FIG. 1A.

FIG. 4.

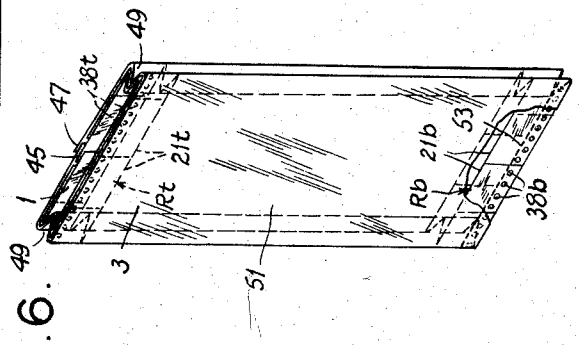

FIG. 6.

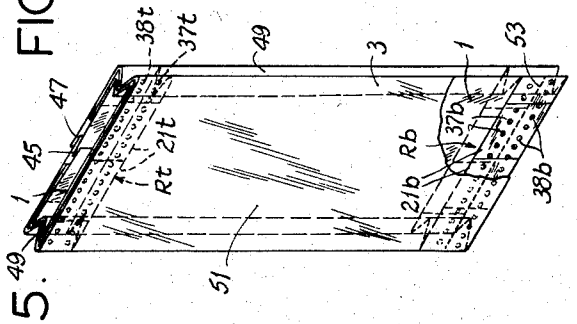

FIG. 5.

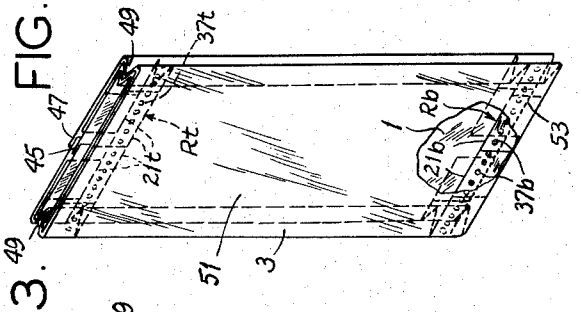

FIG. 3.

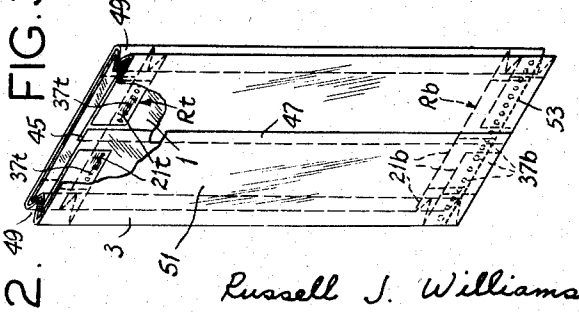

FIG. 2.

Russell J. Williams,
Inventor.
Koenig and Pope,
Attorneys.

United States Patent Office

2,869,772

Patented Jan. 20, 1959

2,869,772

BAG

Russell J. Williams, Clayton, Mo., assignor to Bemis Bro. Bag Company, St. Louis, Mo., a corporation of Missouri

Application March 26, 1956, Serial No. 573,853

7 Claims. (Cl. 229—55)

This invention relates to bags, and more particularly to multi-ply paper bags having laterally offset ply seams.

Among the several objects of this invention may be noted the provision of a mode of reinforcing multi-p'y bags of the class described at their end closures to offset the weakness otherwise caused by the formation of the closures, which eliminates any necessity for the use of one or more complete extra plies to offset the weakening effect of the closures, thereby effecting great saving of paper in quantity production; and the provision of bags with the stated reinforcement adapted for economical manufacture. Other objects and features will be in part apparent and in part pointed out hereinafter.

The invention accordingly comprises the constructions hereinafter described, the scope of the invention being indicated in the following claims.

In the accompanying drawings, in which several of various possible embodiments of the invention are illustrated,

Fig. 1 is a semi-diagrammatic view in perspective illustrating procedure in the manufacture of gusseted stitched-bottom bags in accordance with this invention;

Fig. 1A is an enlarged continuation of Fig. 1 illustrating further steps in the procedure;

Fig. 2 is a view in perspective of a gusseted stitched-bottom bag of this invention as it appears from one side thereof, part of the outer ply of the bag being broken away;

Fig. 3 is a view in perspective showing the other side of the Fig. 2 bag, part of the outer ply of the bag being broken away;

Fig. 4 is an enlarged cross-section taken on line 4—4 of Fig. 1A;

Fig. 5 is a view similar to Fig. 2 illustrating a modification; and,

Fig. 6 is a view similar to Fig. 2 illustrating another modification.

Corresponding reference characters indicate corresponding parts throughout the several views of the drawings.

Referring to the drawings, Figs. 1–4 illustrate the manufacture of gusseted multi-ply stitched-bottom paper bags in accordance with this invention. To avoid complication of the disclosure, the manufacture of two-ply bags is shown, but it will be understood that the principles of the invention are applicable to the manufacture of bags with more than two plies. In accordance with this invention as it pertains to the manufacture of two-ply bags, two webs of paper 1 and 3 are continuously drawn from supply rolls 5 and 7, combined to form a two-ply web at a combining guide 9, and the two-ply web is continuously fed through a conventional tuber (not illustrated) to be formed into tubing. Guide 9 is shown as a roll. The webs 1 and 3 travel to the roll 9 in spaced paths, converging together at the roll to form a two-ply web. The web 1, which eventually becomes the inner ply of the tubing, is shown as travelling from supply roll 5 over an upper guide roll 11 from which it leads downward to the combining roll 9. The web 3, which eventually becomes the outer ply of the tubing, is shown as travelling from supply roll 7 around a lower guide roll 13, from which it travels upward to a guide roll 15, thence forward to a guide roll 17, and thence forward and downward to the combining roll 9. The bite of webs 1 and 3 (i. e., the transverse line on which they come into engagement) is indicated at B. The webs 1 and 3 are combined in laterally offset relation, as is conventional in the manufacture of multi-ply paper bags.

As the webs 1 and 3 are combined at the combining roll 9, rows or bands R of reinforcing patches 21 are fed in between the webs and pasted in between them, the rows or bands R being spaced at bag length intervals along the length of the composite two-ply web formed at the combining roll. Each row or band R is shown as having six patches 21 arranged side-by-side with the side edges of adjacent patches abutting one another. The six patches 21 are severed from six continuous strips S–1 to S–6 of patch material drawn from six supply rolls SR–1 to SR–6. For utmost economy, the strips S–1 to S–6 may be strips of paper resulting from trimming operations in the bag factory otherwise disposed of as scrap. As shown in Fig. 1, the total width of the six strips is somewhat less than the width of webs 1 and 3. The strips S–1 to S–6 are drawn from the supply rolls SR–1 to SR–6 at a speed less than the speed of webs 1 and 3 by a pair of draw rolls 27. They are fed by the draw rolls in a downwardly inclined path through a cutter 29 and between the converging webs 1 and 3 into the bite B of the webs. The cutter 29, as shown, may comprise an anvil roll 31 and a double-blade cutter 33, and is adapted to sever the strips into patches which are of an appropriate dimension in the longitudinal direction of the webs 1 and 3. What the appropriate longitudinal dimension is will be later made clear in reference to the finished bags. The line on which the cutter cuts the strips is spaced from the bite B of webs 1 and 3 a distance corresponding generally to the desired longitudinal dimension for the patches. The timing of the cutter is such that it severs the strips to form a row of patches substantially at the instant that the ends of the strips are caught in the bite of webs 1 and 3, and the severed patches are thereupon drawn in between the webs 1 and 3 at the speed at which webs 1 and 3 are travelling. The patches are pulled away from the freshly cut ends of the strips since the strips are fed by the draw rolls 27 at a speed lower than the speed of the webs 1 and 3, and the rows of patches drawn in between the webs 1 and 3 are spaced along the length of the webs 1 and 3 at equal intervals. Since the strips S–1 to S–6 are simultaneously severed by the cutter 33, the edges of the patches 21 in each row R which extend transversely of the webs 1 and 3 are aligned. The speed of the strips in relation to the speed of webs 1 and 3 is made such that the spacing of the rows of patches corresponds to the desired length of the bags to be manufactured.

The rows or bands R of patches 21 are shown as being pasted in between the webs 1 and 3 by applying a pattern of adhesive (paste) to the inside surface of the web 3 as it travels toward the combining roll 9. As illustrated, this is accomplished by means of a spot paster 35 adapted to apply a pair of rows of spots 37*b* and 37*t* across the width of the web 3, the two rows of the pair being spaced longitudinally of the web a distance somewhat less than the longitudinal dimension of the rows of patches 21, and with successively applied pairs spaced at bag length intervals along the length of the web. The timing of the paster is such that each pair of rows of paste spots 37*b* and 37*t* registers with a row R of patches 21 as the row of patches is drawn in between the webs 1 and 3, with the two rows 37*b* and 37*t* lying on opposite sides of the

transverse center line C—C of the row of patches and closely adjacent those edges of the row which extend transversely of the webs.

Thus, there issues from the combining roll 9 the composite web 39 consisting of the webs or plies 1 and 3 with the rows or bands R of patches 21 pasted in between the plies at bag length intervals along the length of the composite web. In accordance with the invention as illustrated in Fig. 1, the rows or bands of patches extend from near one side margin of the composite web 39 to near the other. The composite web travels around a guide roll 41 and thence to a tuber (not illustrated) where it is formed in conventional manner into a gusseted tubing 43 in which the two edges of each ply are overlapped and secured directly together throughout their length by adhesive to form an individual tube having a longitudinal seam. The seams of the resultant inner and outer tubes are designated 45 and 47. These are laterally offset from one another, extending generally centrally of the back wall of the tubing. The gussets are designated 49. As a result of the previously described operations, the tubing 43 is two-ply tubing and has the rows or bands R of patches 21 pasted in between its plies spaced at bag length intervals along its length, as shown in Fig. 1A. The rows of patches extend substantially completely girthwise of the tubing from near one side of the seamed region of the tubing to near the other side thereof. Here it will be understood that the combined width of the six patch-forming strips S–1 to S–6 and hence the transverse dimension of the row or band of patches 21 is somewhat less than the width of the ply-forming webs 1 and 3 so that the rows of patches do not extend into the ply seams, otherwise the tubing (and bags to be formed therefrom) would be unduly thickened at the seams.

The tubing 43 is severed into individual bag lengths 51 on the transverse center lines C—C of the rows or bands R of patches 21 (see Fig. 1A). This divides each individual row R into two rows or bands R*b* and R*t* and each patch 21 into two patches 21*b* and 21*t*. It results in each bag length 51 having a row or band R*b* of patches 21*b* at one end and a row or band R*t* of patches 21*t* at the other. The transverse edges of the patches 21*b* at said one end of the bag length are aligned and coincident with said one end. The transverse edges of the patches 21*b* away from said one end are aligned. The transverse edges of the patches 21*t* at said other end of the bag length are aligned and coincident with said other end. The transverse edges of the patches 21*t* away from said other end are aligned. The patches 21*b* of each bag length are pasted in between the two plies 1 and 3 of the bag length by the row of spots 37*b*, and the patches 21*t* are pasted in between the plies by the row of spots 37*t*. The rows of spots 37*b* and 37*t*, having originally been located adjacent the transverse edges of rows R of patches 21, are located on transverse lines adjacent the inner edges of the patches spaced from the respective ends of the bag length.

Each bag length is bottomed by stitching together its front and back walls adjacent one end of the bag length (the end including patches 21*b*) as indicated at 53 in Figs. 2 and 3. The stitches extend through the patches 21*b* and also through the gussets 49. The line of stitching is offset from the row of paste spots 37*b*, being located outward from (below) spots 37*b*. This is important in order that the stitches not be driven through pasted areas, and accounts for the disposition of the rows 37*b* (and 37*t*) adjacent the transverse edges of the rows R of patches 21. Here it will be observed that the dimension of patch 21*b* heightwise of the bag (longitudinally of plies 1 and 3) need be only sufficient to account for the spacing of the stitching above the bottom of the bag (standard spacing being one-half inch) plus enough space for the paste spots, and it will be clear that the appropriate longitudinal dimension for each patch 21 is twice this. Each bag length is also ultimately closed at its top by a line of stitching like stitching 53, with the top stitches extending through the patches 21*t* above the row of paste spots 37*t*. It will be understood that the top closure may be formed either after filling, or after the formation of a valve and before filling.

In the filled bag provided with the stitched bottom and top closures, the rows or bands R*b* and R*t* of patches 21*b* and 21*t* act as reinforcement to prevent the stitches from cutting through the bag plies under strain such as is incurred when the bag is dropped. This reinforcement results from the patches being pasted in between the bag plies, whereby they are locked against moving outward from between the plies. Each row R*b* and R*t* of patches provides two extra thicknesses of paper for reinforcement, except in the region of the ply seams, but here there are two extra thicknesses irrespective of the patches in view of the overlapping of the margins of the plies. Hence, the absence of patch material in the region of the ply seams is not detrimental to the strength of the bag.

As to bags sold with open mouths, it is desirable to have the patches at the mouth pasted to both plies so that the plies are secured together at the mouth. In some cases it may be desirable to have the patches at both top and bottom pasted to both plies more securely to lock them in between the plies. This may be particularly desirable where the patch material is of considerably higher strength than the bag ply material and additional pasting is needed to utilize the full strength of the patch material. Under these circumstances, paste may be applied to web 1, as well as to web 3, by a paster similar to the paster 35.

The bags may be manufactured with more than two plies simply by combining additional webs with webs 1 and 3 at the combining roll 9, as will be readily understood. It is also contemplated that bags which have more than two plies may have more than one row or band of patches at each end. For example, a three-ply bag may have two rows of patches at each end, one row pasted in between the inner ply and intermediate ply, and the other row pasted in between the intermediate ply and the outer ply.

As above described, the patches 21 and hence the patches 21*b* and 21*t* into which the patches 21 are divided are arranged side-by-side with the side edges of adjacent patches abutting one another. It will be understood, however, that precise abutment or alignment of the side edges of adjacent patches is not essential. The side edges of adjacent patches may be only substantially aligned, either overlapping to some extent or being spaced to some extent. Hereinafter, when reference is made to the side edges of adjacent patches as being "substantially aligned," it will be understood that this includes overlapping or spacing of the side edges to some extent as well as precise abutment or alignment of the side edges.

It is contemplated that the rows R*b* and R*t* of patches 21*b* and 21*t* may be pasted in between the plies of the bag on the outside of the lines of stitching as well as on the inside of the lines of stitching. As shown in Fig. 5, row R*b* of patches 21*b* is pasted in between the plies by a row of paste spots 38*b* located outward of the line of stitching 53 as well as by the row of paste spots 37*b* located inward of the line of stitching. Row R*t* of patches 21*t* is pasted in between the plies by a row of paste spots 38*t* spaced from the row of paste spots 37*t* toward the top edge of the bag so that the line of stitching for closing the top of the bag may be driven between the rows 37*t* and 38*t*.

It is also contemplated that the rows R*b* and R*t* of patches 21*b* and 21*t* may be pasted in between the plies only on the outside of the lines of stitching. As shown in Fig. 6, row R*b* of patches 21*b* is pasted in between the plies only by the row of paste spots 38*b* located outward of the line of stitching 53. Row R*t* of patches 21*t* is pasted in between the plies only by the row of paste spots 38*t* located adjacent the top edge of the bag so that the

line of stitching for closing the top of the bag may be driven inward of (below) the row 38*t*.

In view of the above, it will be seen that the several objects of the invention are achieved and other advantageous results attained.

As various changes could be made in the above constructions without departing from the scope of the invention, it is intended that all matter contained in the above description or shown in the accompanying drawings shall be interpreted as illustrative and not in a limiting sense.

I claim:

1. A multi-ply paper bag formed from a length of multi-ply paper tubing and having a front wall and a back wall, the plies of the tubing having the edges thereof which extend lengthwise of the tubing laterally offset, the two edges of each ply being overlapped and secured together by adhesive to form an individual tube having a longitudinal seam, the seams of said individual tubes being laterally offset by reason of the lateral offset of the edges of the plies, and all of the seams being located in the back wall of the length of tubing, said tubing having at least one end thereof a band of reinforcing material extending girthwise of the tubing between two of said individual tubes across the front wall and around into the back wall, the length of said band being less than the girth of said tubing and said band being so positioned in relation to the girth of said tubing as to terminate short of the seam of at least one of said two tubes, said band comprising a plurality of individual patches of reinforcing material pasted in between the plies of the tubing arranged side-by-side in a row extending transversely of the bag, and the two edges of each ply included in the seam of the respective tube being adhered directly together throughout the entire length of the seam, means anchoring the band between said two tubes, and means securing together portions of said front and back walls of the tubing at said end of the tubing to provide a closure, said band having a portion thereof located within and reinforcing said closure.

2. A multi-ply paper bag formed from a length of multi-ply paper tubing and having a front wall and a back wall, the plies of the tubing having the edges thereof which extend lengthwise of the tubing laterally offset, the two edges of each ply being overlapped and secured together by adhesive to form an individual tube having a longitudinal seam, the seams of said individual tubes being laterally offset by reason of the lateral offset of the edges of the plies, and all of the seams being located in a region of the back wall of the length of tubing, two bands of reinforcing material, one at each end of the length of tubing, extending girthwise of the tubing between two of said individual tubes thereof across the front wall and around into the back wall, the length of each of said bands being less than the girth of said tubing and said bands being so positioned in relation to the girth of said tubing as to extend from near one side to near the other side of the said seamed region of the back wall of the length of tubing and terminate short of said seamed region, each of said bands comprising a plurality of individual patches of reinforcing material pasted in between the plies of the tubing arranged side-by-side in a row extending transversely of the bag, and the two edges of each ply included in the seam of the respective tube being adhered directly together throughout the entire length of the seam, means anchoring the bands between said plies, and a line of stitching closing at least one end of the bag and extending through the band at said end of the bag, said band through its anchorage between the plies acting as reinforcement to prevent the stitching from cutting through the bag plies.

3. A multi-ply paper bag as set forth in claim 2 wherein the inner edges of the patches in each row are aligned, the outer edges of the patches in each row are aligned, and the side edges of the patches in each row are substantially aligned.

4. A multi-ply paper bag formed from a length of multi-ply paper tubing and having a front wall and a back wall, the plies of the tubing having the edges thereof which extend lengthwise of the tubing laterally offset, the two edges of each ply being overlapped and secured together by adhesive to form an individual tube having a longitudinal seam, the seams of said individual tubes being laterally offset by reason of the lateral offset of the edges of the plies, and all of the seams being located in a region of the back wall of the length of tubing, two bands of reinforcing material, one at each end of the length of tubing, extending girthwise of the tubing between two of said individual tubes thereof across the front wall and around into the back wall, the length of each of the said bands being less than the girth of said tubing and said bands being so positioned in relation to the girth of said tubing as to extend from near one side to near the other side of the said seamed region of the back wall of the length of tubing and terminate short of said seamed region, each of said bands comprising a plurality of individual patches of reinforcing material pasted in between the plies of the tubing arranged side-by-side in a row extending transversely of said bag, and the two edges of each ply included in the seam of the respective tube being adhered directly together throughout the entire length of the seam, means anchoring the bands between said plies, and a line of stitching closing at least one end of the bag with the stitches extending through said patches of the band at said end of the bag, the line of stitching being offset from the paste, said band through its anchorage between the plies acting as reinforcement to prevent the stitching from cutting through the bag plies.

5. A multi-ply paper bag as set forth in claim 4 wherein the patches are pasted in between the plies solely in the region inward of the line of stitching.

6. A multi-ply paper bag as set forth in claim 4 wherein the patches are pasted in between the plies in the region inward of the line of stitching and also in the region outward of the line of stitching.

7. A multi-ply paper bag as set forth in claim 4 wherein the patches are pasted in between the plies solely in the region outward of the line of stitching.

References Cited in the file of this patent

UNITED STATES PATENTS

962,934	Weatherwax	June 28, 1910
1,920,700	Jaite	Aug. 1, 1933
2,020,300	Cundall	Nov. 12, 1935
2,116,571	Gurwick	May 10, 1938
2,220,874	Waters	Nov. 5, 1940
2,311,733	Bushman	Feb. 23, 1943
2,330,015	Stokes	Sept. 21, 1943
2,493,349	Hoppe	Jan. 3, 1950
2,625,318	Ross	Jan. 13, 1953

FOREIGN PATENTS

512,903	Belgium	Aug. 14, 1952