(19) Europäisches Patentamt
European Patent Office
Office européen des brevets

(11) EP 2 243 713 A1

(12) EUROPEAN PATENT APPLICATION

(43) Date of publication:
27.10.2010 Bulletin 2010/43

(51) Int Cl.:
B65D 30/24 *(2006.01)* ***B65B 9/13*** *(2006.01)*
B65D 75/46 *(2006.01)* *B65D 75/48* *(2006.01)*

(21) Application number: **09005791.0**

(22) Date of filing: **25.04.2009**

(84) Designated Contracting States:
AT BE BG CH CY CZ DE DK EE ES FI FR GB GR HR HU IE IS IT LI LT LU LV MC MK MT NL NO PL PT RO SE SI SK TR
Designated Extension States:
AL BA RS

(71) Applicant: **Nestec S.A.**
1800 Vevey (CH)

(72) Inventors:
- **Cerveny, Mr. Jean-Paul**
  88800 Vittel (FR)
- **Detrois, Christian**
  88190 Golbey (FR)
- **Hartwig, Klaus**
  54000 Nancy (FR)
- **Lüpke, Erik**
  54000 Nancy (FR)
- **Vigny-Schmitt, Murielle**
  88000 Vittel (FR)

(54) A disposable very lightweight package

(57) The present invention is directed to a flexible pouch-like disposable package (1) made from a thermoplastic film having a thickness of less than 100 microns, comprising a package body, **characterized in that** the package body comprises at least two walls, one of said walls comprising a filling area (2) for filling said package (1) with a flowable product (3), said walls being disposed adjacent to one another so that after filling, said walls can be sealed together by a seal (24) disposed around said area (2) so that the package (1) is hermetically closed.

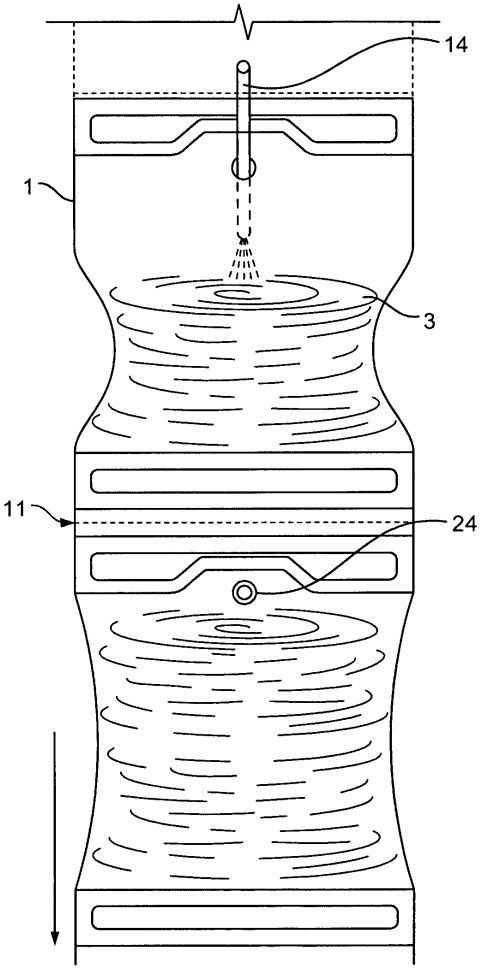

FIG. 8

EP 2 243 713 A1

Description

Field of the invention

[0001] The present invention concerns a disposable package. More particularly, it is directed to a disposable package that has a very light weight.

Background of the invention

[0002] For the packing of flowable products like edible liquids - for instance mineral water or other beverages - it is known to use bottles made out of plastic, that are filled and then capped. Such bottles, although they are now produced using less amount of plastic material, are still heavy, and due to the relatively large amount of packaging material that is used, have an important ecological footprint.

[0003] Alternatives were developed for the packing of some flowable products like syrups, fruit purees, or ready-to-drink beverages, which uses packages having a pouch-like body made of a multilayer material - typically a polyethylene-aluminium multilayer material -, said body being sealed to a plastic element that constitutes a neck to be closed by a cap or equivalent. Such composite packages have a low weight. They have also an important ecological footprint tough, as they use a multilayer material for the pouch, as well as different separate parts for the neck and the cap.

[0004] All the above packing solutions, also require a closing step which is completely separate from the filling step, and are therefore not ideal in terms of manufacturing rate.

[0005] Moreover, the packaging solutions described above require different separate steps for filling and closing, and therefore they are incompatible with polluted - dusty for instance - environments, without the use of specific additional and costly equipments for ensuring substantially aseptic filling and closing operations.

[0006] There is therefore a need for a packing and packaging solution that allows excellent manufacturing rates, by allowing a rapid filling and closing of substantial volumes of product into the package, as a continuous process - possibly in one step -, and without the need for an additional, separate, closing system.

Summary of the invention

[0007] Such a problem is solved by the present invention with a flexible pouch-like disposable package made from a thermoplastic film having a thickness of less than 100 microns, comprising a package body, **characterized in that** the package body comprises at least two walls, one of said walls comprising a filling area, which is optionally a filling opening, for filling said package with a flowable product, said walls being disposed adjacent to one another so that after filling, said walls can be sealed together by a seal disposed around said opening so that the package is hermetically closed.

[0008] With such a package, it is possible to easily and rapidly close the opened filling area - or the filling opening - after the filling step, which allows high manufacturing rates. Moreover, the package is in one piece, and all of its walls - even when it is closed - are sufficiently thin to ensure that very little packaging material is used, so that the ecological footprint of a package according to the present invention is very tiny.

[0009] Advantageously, the film has a thickness of less than 80 microns, preferably less than 50 microns.

[0010] It is also highly desirable in the present invention, that the thermoplastic film be made from a biodegradable, or oxo-biodegradable, material such that said package is entirely destroyed within a period of less than 700 days, preferably less than 200 days, more preferably less than 90 days when placed in favourable biodegradability conditions.

[0011] Preferably, said biodegradable thermoplastic film is made from a material selected in the list of: polyhydroxyalkanoates (PHA) such as for instance poly-3-hydroxybutyrate (P3HB), poly-4-hydroxybutyrate (P4HB), polyhydroxyvalerate (PHV), polyhydroxyhexanoate (PHH), polyhydroxyoctanoate (PHO) and their copolymers, zein-based bioplastic polymers, starch-based resins, polylactic acid based resins, hemp-based resins, cellulose-based resins, or a combination thereof.

[0012] The package according to the invention, once it is filled and closed, can be opened - for instance by a consumer - by cutting, punching, tearing, piercing or a combination thereof.

[0013] Preferably, the filling opening of the package is a hole that is punched out from the wall of the package body.

[0014] Also preferably, the inner diameter of the filling opening substantially corresponds to the outer diameter of the filling needle that is used for filling, and said inner diameter is comprised between 1 and 15 mm, preferably comprised between 3 and 10 mm. The fact that the inner diameter of the package opening corresponds substantially to the diameter of the filling needle is made possible by the fact that the walls of the package are flexible and very thin, and have therefore an elasticity that prevents the filling needle to be blocked into the said opening when said needle is introduced into the package for the filling and then removed therefrom. Furthermore, it ensures that almost no dust, smoke, or other similar kind of undesirable particles can enter the package before, during, or after the filling, even if these operations are performed in a polluted (for instance dusty) environment.

[0015] In a highly preferred embodiment of the present invention, the package is a premade film pouch manufactured and stored as a continuous roll, so that two adjacent pouches in the roll are linked in a detachable manner by a precut seam.

[0016] Advantageously, the package of the invention can comprise several separate chambers inside its body, so that when said package is filled and closed, its base

comprises a substantially flat surface.

[0017] In any case, the package according to the invention is particularly meant - due to the clean conditions of filling and closing it offers - to be filled with a flowable product that is selected from the list of: gases, powders, granulates, gels, creams, liquids or a combination thereof, and is preferably an edible product.

[0018] The present invention is further related to a packing process for packing a flowable material into a package according to any of the preceding claims, **characterized in that** it comprises the steps of, in order:

(i) inserting and holding a package into a filling means comprising at least one pair of adjacent rolls having cooperating grooves disposed in alignment so as to define a filling channel, said package being held such that its filling area is disposed within said channel,
(ii) inserting at least one filling needle through said channel and filling area, into the package,
(iii) filling said package with said flowable product,
(iv) removing the needle from the package and channel, actuating the rolls to move the filled package towards sealing means,
(v) actuating the sealing means to create a fluid-tight seal around said filling area to hermetically seal the package by melting the two walls of the package body in the region of said seal.

[0019] Again, it is highly preferable for the sake of industrial efficiency that the package be a premade film pouch manufactured and stored as a continuous roll, so that two adjacent pouches in the roll are linked in a detachable manner by a precut seam.

[0020] In this case, once a package is filled and closed it can be detached easily from the rest of the roll of pouches by manual or automated operation, along the precut seam.

[0021] Advantageously, the filling means can comprise weighing means, or a volumetric filling system, or a flow meter and/or an intermediate tank for the control of the filled volume of beverage into the package.

Brief description of the drawing

[0022] Additional features and advantages of the present invention are described in, and will be apparent from, the description of the presently preferred embodiments which are set out below with reference to the drawings in which:

Figure 1 is a schematic front view of a roll of packages according to the invention ;
Figures 2A & 2B are schematic, respectively side and front views, representing an integrated pouch manufacturing line ;
Figures 3 and 4 are schematic perspective views, partially cut, showing filling and closing of a package according to the invention ;
Figure 5 is a schematic perspective view, partially cut, of a replaceable cartridge containing packing, filling and sealing units for a package according to the invention ;
Figures 6 and 7 are schematic profile views similar to figure 5 ;
Figure 8 is a schematic front view showing how a pouch is filled ;
Figure 9 is a schematic perspective view showing the filling unit for pouches, according to the invention ;
Figure 10 is a profile view similar to figure 9 where the filling needle is not yet inserted into the pouch filling opening ;
Figure 11 is a profile view similar to figure 9, wherein the filling needle is inserted into the pouch filling opening, and a beverage is being packed therein ;
Figure 12 is a schematic front view showing a pouch that is filled and sealed, and ready to be separated from the rest of the pouches roll ;
Figure 13 is a view similar to figure 12, showing an alternative embodiment for the pouch construction ;
Figure 14 is a view similar to figure 13, wherein one of the pouch is being opened into its dispensing configuration ;
Figure 15 is a schematic front view showing yet another possible embodiment of a pouch construction, wherein each pouch is equipped with a carrying precut handle ;
Figure 16 is a view similar to figure 15, wherein a pouch is detached from the rest of the pouch roll, and the precut handle is detached to be usable ;
Figure 17 is a profile view similar to figure 16, illustrating how a used can carry the pouch, using the handle.

Detailed description of the invention

[0023] The present invention is meant to be used for instance with a filling and closing system contained in a water fountain for in home usage. By in home usage, it is also meant that the present invention shall be also used in offices. Preferably, the overall volume of said fountain is less than 1 m^3, preferably less than 0.5 m^3, even more preferably less than 0.2 m^3, so that said fountain can fit in small spaces like a kitchen or an office. Therefore, the package according to the present invention can have various sizes, but is adapted for small volumes (less than 1litre of content), and is adapted to be filled and closed in a filling and closing system having a reduced size.

[0024] As illustrated in **figure 1**, the present invention is directed to a one-piece flexible pouch-like disposable package 1 made from a thermoplastic film having a thickness of about 70 microns, comprising a package body and a filling area 2. In the example described hereafter in reference to the drawing, the filling area is a filling open-

ing (2). However, the filling area could stay closed until the package is filled, for instance by a filling needle that would pierce the package wall in the region of the filling area, and then said area would be closed again by performing a seal as will be described hereafter in detail.

[0025] According to the invention, the package body comprises at least two walls, one of said walls comprising the filling opening 2 for filling said package 1 with a flowable product 3, said walls being disposed adjacent to one another so that after filling, said walls can be sealed together by a seal 4 disposed around said opening 2 so that the package 1 is hermetically closed.

[0026] The thermoplastic film that is used is a biodegradable material such that at least 90% of said package is destroyed within a period of less than 90 days when placed in favourable biodegradability conditions, according to European standard EN 13432.

[0027] By favourable conditions for biodegradability, it is meant that 4 essential elements are present in the environment to allow a biodegradation to occur: sufficiently high temperature, presence of micro-organisms, sufficiently high level of oxygen, sufficiently high level of humidity.

[0028] Preferably, said biodegradable thermoplastic film is made from a material selected in the list of: polyhydroxyalkanoates (PHA) such as for instance poly-3-hydroxybutyrate (P3HB), poly-4-hydroxybutyrate (P4HB), polyhydroxyvalerate (PHV), polyhydroxyhexanoate (PHH), polyhydroxyoctanoate (PHO) and their copolymers, zein-based bioplastic polymers, starch-based resins, polylactic acid based resins, hemp-based resins, cellulose-based resins, or a combination thereof.

[0029] The package 1 according to the invention, once it is filled and closed, can be opened - for instance by a consumer - by cutting, punching, tearing, piercing or a combination thereof.

[0030] Preferably, the filling opening 2 of the package 1 is a hole that is punched out from the wall of the package body at the time the package is manufactured, as will be described in more details hereafter.

[0031] As illustrated in **figures 8 to 11,** the inner diameter of the filling opening 2 substantially corresponds to the outer diameter of a filling needle 5 that is used for filling. In the example that is illustrated in the drawing, the inner diameter of the filling opening 2 is 7 mm.

[0032] The package according to the invention is made as part of a roll of premade pouches 1, as illustrated for instance in **figures 1 to 7.** The packages according to the invention are specifically adapted to be filled and closed in a continuous filling and sealing system as explained hereafter.

[0033] The pouches 1 described above are manufactured as a roll of pouches, with a continuous process illustrated in **figures 2A and 2B**, wherein figure 2B is a 90°side view of the figure 2A, so as to show how the film is folded during the forming operation.

[0034] The roll of pouches is formed out of a thermoplastic film that is rolled and sealed longitudinally into a tube. Two pairs of rolls 6 that are disposed spaced apart from one another fold the film, and the filling openings 2 are cut by punching at regular intervals along the roll. Then, another pair of rolls 7 folds the tube of film at a 90° angle relative to the longitudinal axis of said tube, and two pairs of sealing jaws 8 seal the pouch at its upper 9 and lower 10 extremities, as illustrated in **figures 2A and 2B**. As can be seen in **figure 2B,** the upper seal 9 has a specific shape which allows positioning this upper seal 9 very close to the pouch opening 2. At the same time the sealing jaws 8 create a seal to close the upper and lower edges of a pouch, they create transversal pre-cut seam lines 11 respectively above and below the upper 9 and lower 10 seals of the pouch 1, as illustrated for instance in **figures 8, 12 or 13**. The pre-cuts 11 are made by cutting tools - not shown in the drawings - that are integrated in the sealing jaws 8.

[0035] In **figures 2, 3 and 4**, one can see that the roll of pouches 1 is meant to be mounted into a filling and closing (also called "sealing") system, such that the free end of pouches runs through filling means and sealing means that ensure respectively that water is filled into each pouch 1, and then said filled pouch 1 is sealed.

[0036] The filling means comprises a pipe 12 that conveys water from a water source. This pipe 12 is linked to a filling pump - not illustrated in the drawing - coupled to an electronic management system - not illustrated in the drawing - that synchronises the movements of the roll of pouches together with the filling pump and the sealing means.

[0037] The pipe 12 is linked to a filling needle 14 that is movable in a back-and-forth movement relative to the pouch 1 that is being filled, as can be seen in detail in **figures 6 to 11**. The needle 14 is moved with a piston-like system 15 that can be seen in **figure 6.**

[0038] In **figures 5 to 11**, one can see that a pouch 1 is being filled and is held by a pair of rolls 16 of the filling means. As shown particularly in **figure 9,** each roll 16 is equipped with rubber surfaces 17 that have a gripping effect onto the surface of the pouch 1, so that the pouch does not slip away during the filling operation. The rolls 16 comprise cooperating grooves 13 that define a passage through which the filling needle 14 can move to fill the package 1, as can be seen in **figures 9, 10 and 11.**

[0039] As shown in **figures 2, 8, 9, and 12 to 16**, the pouch 1 comprises a rounded opening 2 through which the filling needle 5 of the filling system can penetrate before the filling operation starts. Once the pouch is filled, the needle 5 is removed from the pouch, and the latter is sealed be the sealing means.

[0040] The two rolls 16 that hold the pouch 1 during the filling operation, both comprise grooves, that are positioned in vis-à-vis one relative to the other, so that the two cooperating grooves define a channel which has a diameter superior or equal to that of the filling needle 5, so that said needle can move back and forth in between the rolls 16 during the filling operation.

[0041] **Figure 8** shows a roll of pouches that is dis-

posed into the filling means and sealing means. One pouch 1 a is already filled and is being sealed, and the pouch 1 b above in the roll of pouches is being filled. As illustrated in **figures 4, 5, 6 and 7** the sealing means comprise a pair of sealing jaws 18 that are movable in a back and forth reciprocating movement by actuating means - not shown in the drawing - for instance a pneumatic piston, or an electric motor, similarly to sealing jaw systems commonly known to those skilled in the art.

[0042] Once a pouch 1 is filled with mineral water, the roll of pouches is unrolled, so that the upper edge 9 of the filled pouch is disposed between the sealing jaws 18. The unrolling movement is then stopped and the sealing jaws 18 are moved towards each other as illustrated with arrows in **figure 5** so as to seal the opening 2 of the pouch 1, and then backwards so as to release the pouch that is now filled and sealed. The unrolling operations then starts again so that the pouch that is filled and sealed can be directed to the cutting means 19 - shown in **figures 6 and 7** - to be detached from the roll of pouches, and fall into the dispensing drawer 20 as shown in **figure 7**. The cutting means 19 can be a cutting blade that is moved back and forth with an electric motor.

[0043] As already described above and as shown in **figures 5, 6 and 7,** the roll of pouches, the filling means and the sealing and cutting means can be enclosed into a casing (or otherwise called "cartridge") 21. The front part of the casing 21 can be equipped with a window 22 for a consumer to watch the filling, sealing and cutting operations, as illustrated in figure 7. The casing 21 comprises a backdoor 23 to access the interior of the said casing and replace the roll of pouches when necessary.

[0044] In each pouch 1, the premade weld seam length represents at least 70% of the final weld seam length, in other words the area that is not seamed when the pouch is still in the roll of pouches, is less than 30% of the seam length that is necessary for having an entirely closed package.

[0045] Each package used to pack water in the field of the present invention, is preferably shaped such that the material constitutive of the package body in one cross-section, extends beyond the boundaries of the filling opening. This ensures that the dispensing opening of the package is somehow protected by the boundaries of the package, and is therefore more mechanically resistant.

[0046] Advantageously, the packages 1 are realized as premade preferably decorated/printed packages. In case a decoration or printing is needed onto the packages, the film for making said pouches 1 is preferably preprinted before being formed into a roll of pouches as will be described hereafter.

[0047] **Figure 12** illustrates a roll of pouches 1 that is obtained with a process as described above. One can see that two consecutive pouches 1 in the roll are linked by a detachable - or tearable - pre-cut line 11 that is transversally disposed along the width of the roll.

[0048] **Figures 12 to 15** show two consecutive pouches 1 in the roll of pouches. In **figures 12 to 15**, the lower pouch is already filled, and its opening 2 is sealed. It is ready to be detached from the rest of the roll along the pre-cut line 11.

[0049] It is clear from **figure 12** which seams of the pouch 3 pre-exist before the filling step: the pouch opening 2 alone remains unsealed, until the filling step is completed. After the filling step, this opening 2 is sealed as well by a closing seal 24 that is rounded in shape to adapt to the opening shape. The filled pouch 1 is therefore completely and hermetically closed. It is to be noted that the filling and sealing step are done in aseptic conditions. The shape of each pouch is generally parallelepipedic, for instance square, as illustrated in **figure 12.**

[0050] In **figures 13 and 14**, one can see an alternative pouch design. In this alternative embodiment, the shape of each pouch 1 is generally square or rectangular. Each pouch 1 is formed from a tubular film as described hereinabove, with upper and lower edges which are sealed transversally to close the pouch. Additionally in this embodiment, an L-shaped seal 25 is created that is generally parallel and adjacent to one side of the pouch. This L-shaped seal 25 is not sealed across its entire surface as can be seen in **figure 13**, but its central area 26 is not sealed and comprises a pre-cut line 27, disposed so that the portion of the pouch 1 located between the L-shaped seal 25 and the adjacent side wall can be detached to form a detachable spout 28 as illustrated in **figure 14**. As illustrated in **figure 14,** the free end 29 of the detachable spout (once it is detached from the rest of the pouch 1) can be cut by the consumer before dispensing. The dispensing spout 28 creates a convenient way of dispensing the pouch contents, without requiring a complex shape of the pouch 1.

[0051] In **figures 15, 16 and 17** is illustrated yet another possible embodiment of a pouch to be used in an apparatus according to the present invention.

[0052] In **figure 15**, one can see that each pouch 1 in the roll is generally as formerly described above, i.e. made from a tubular film which is sealed transversally to create the pouch. In this particular embodiment, the pouch 1 comprises an additional, generally U-shaped, seal 30 that comprises in its surface a pre-cut - not shown in the drawing -. This seal 30 surrounds the pouch opening 2 and is made after the pouch 1 is filled. The seal 30 is in fact shaped and disposed so that the opening 2 is completely enclosed between the U-shaped seal 30 and the upper seal of the pouch 9. In this way, when the seal 30 is made, the pouch is completely closed, as can be seen in **figure 15.**

[0053] When the portion of the pouch that is enclosed in the U-shaped seal 30 is detached, the pouch remains closed, while an opening 31 is created at the same time, as illustrated in **figure 16**, so that a consumer can insert the hand to hold and carry the pouch as illustrated in **figure 17.**

[0054] It should be understood that various changes and modifications to the presently preferred embodi-

ments described herein will be apparent to those skilled in the art. Such changes and modifications can be made without departing from the spirit and scope of the present invention and without diminishing its attendant advantages. It is therefore intended that such changes and modifications be covered by the appended claims.

Claims

1. A flexible pouch-like disposable package (1) made from a thermoplastic film having a thickness of less than 100 microns, comprising a package body, **characterized in that** the package body comprises at least two walls, one of said walls comprising a filling area (2) for filling said package (1) with a flowable product (3), said walls being disposed adjacent to one another so that after filling, said walls can be sealed together by a seal (24) disposed around said area (2) so that the package (1) is hermetically closed.

2. A package (1) according to claim 1, wherein said filling area is a filling opening (2).

3. A package (1) according to claims 1 or 2, wherein the film has a thickness of less than 80 microns, preferably less than 50 microns.

4. A package (1) according to claims 1 to 3, wherein the thermoplastic film is made from a biodegradable or oxo-biodegradable material such that said package is entirely destroyed within a period of less than 700 days, preferably less than 200 days, more preferably less than 90 days.

5. A package (1) according to claim 4, wherein said thermoplastic film is made from a material selected in the list of: polyhydroxyalkanoates (PHA) such as for instance poly-3-hydroxybutyrate (P3HB), poly-4-hydroxybutyrate (P4HB), polyhydroxyvalerate (PHV), polyhydroxyhexanoate (PHH), polyhydroxyoctanoate (PHO) and their copolymers, zein-based bioplastic polymers, starch-based resins, polylactic acid based resins, hemp-based resins, cellulose-based resins, or a combination thereof.

6. A package (1) according to any of the preceding claims, which is openable when it is filled and closed, by cutting, punching, tearing, piercing or a combination thereof.

7. A package (1) according to any of the preceding claims 2 to 6, wherein said filling opening (2) is a hole that is punched out from the wall of the package body.

8. A package (1) according to any of the preceding claims 2 to 7, wherein the diameter of the opening (2) is comprised between 1 and 15 mm, preferably comprised between 3 and 10 mm.

9. A package (1) according to any of the preceding claims, which is a premade film pouch manufactured and stored as a continuous roll, so that two adjacent pouches in the roll are linked in a detachable manner by a precut seam (11).

10. A package (1) according to any of the preceding claims, which comprises several separate chambers inside its body, so that when said package is filled and closed, its base comprises a substantially flat surface.

11. A package (1) according to any of the preceding claims, wherein said flowable product (3) is selected from the list of: gases, powders, granulates, gels, creams, liquids or a combination thereof, and is preferably an edible product.

12. A packing process for packing a flowable product (3) into a package (1) according to any of the preceding claims, **characterized in that** it comprises the steps of, in order:

    (i) inserting and holding a package (1) into a filling means comprising at least one pair of adjacent rolls (16) having cooperating grooves (13) disposed in alignment so as to define a filling channel, said package (1) being held such that its filling area (2) is disposed within said channel,
    (ii) inserting at least one filling needle (5) through said channel and filling area (2), into the package (1),
    (iii) filling said package (1) with said flowable product (3),
    (iv) removing the needle (5) from the package (1) and channel, actuating the rolls (16) to move the filled package towards sealing means,
    (v) actuating the sealing means (18) to create a fluid-tight seal (24, 30) around said filling area (2) to hermetically seal the package (1) by melting the two walls of the package body in the region of said seal (24, 30).

13. A packing process according to claim 11, wherein the package (1) is a premade film pouch manufactured and stored as a continuous roll, so that two adjacent pouches in the roll are linked in a detachable manner by a precut seam (11).

14. A packing process according to claims 11 or 12, wherein the filling means comprises weighing means for the control of the filled volume into the package.

15. A packing process according to claims 11 or 12,

wherein the filling means comprises a volumetric filling system for the control of the filled volume of beverage into the package.

16. A packing process according to claims 11 or 12, wherein the filling means comprises a flow meter and/or an intermediate tank for the control of the filled volume of beverage into the package.

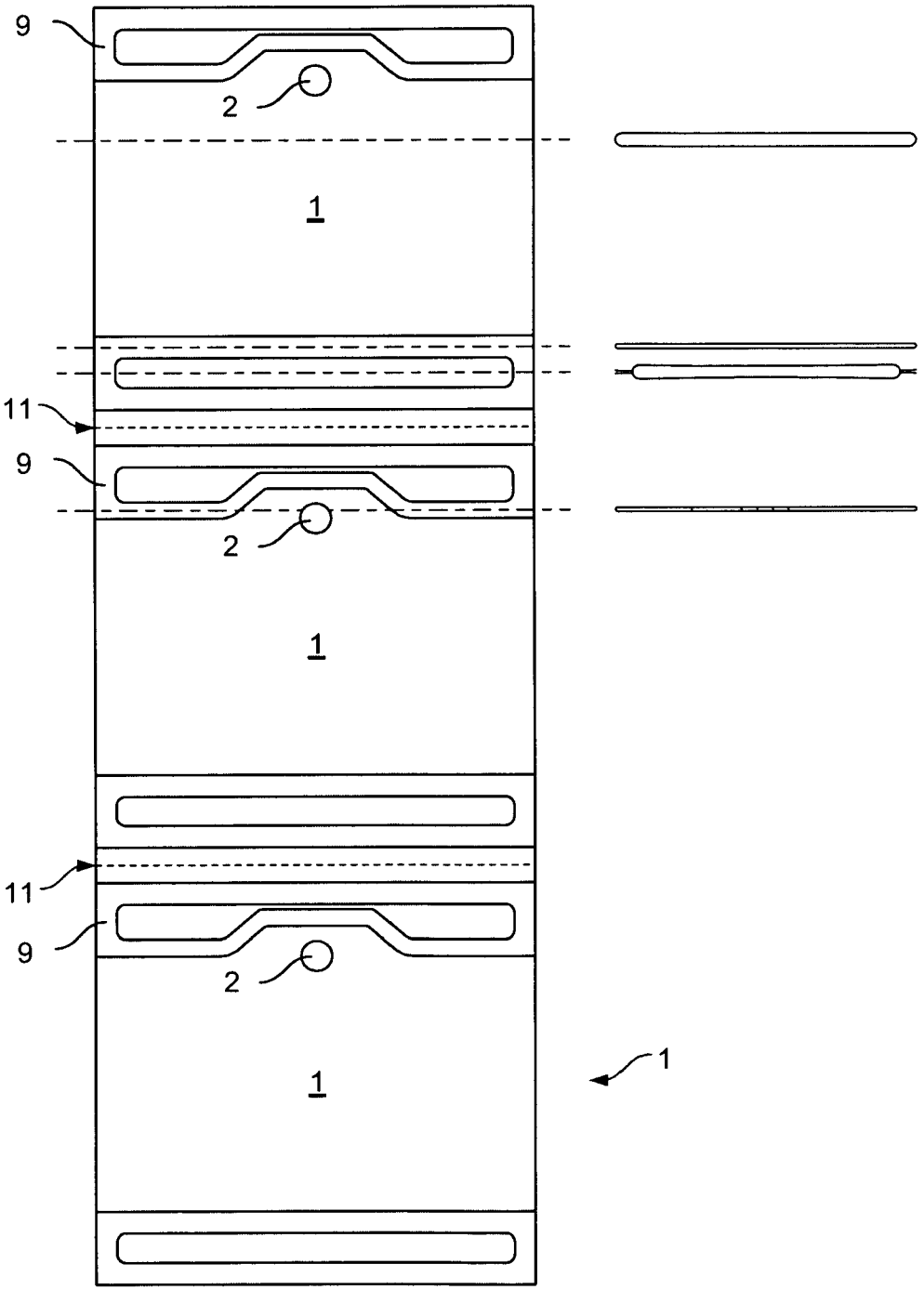

FIG. 1

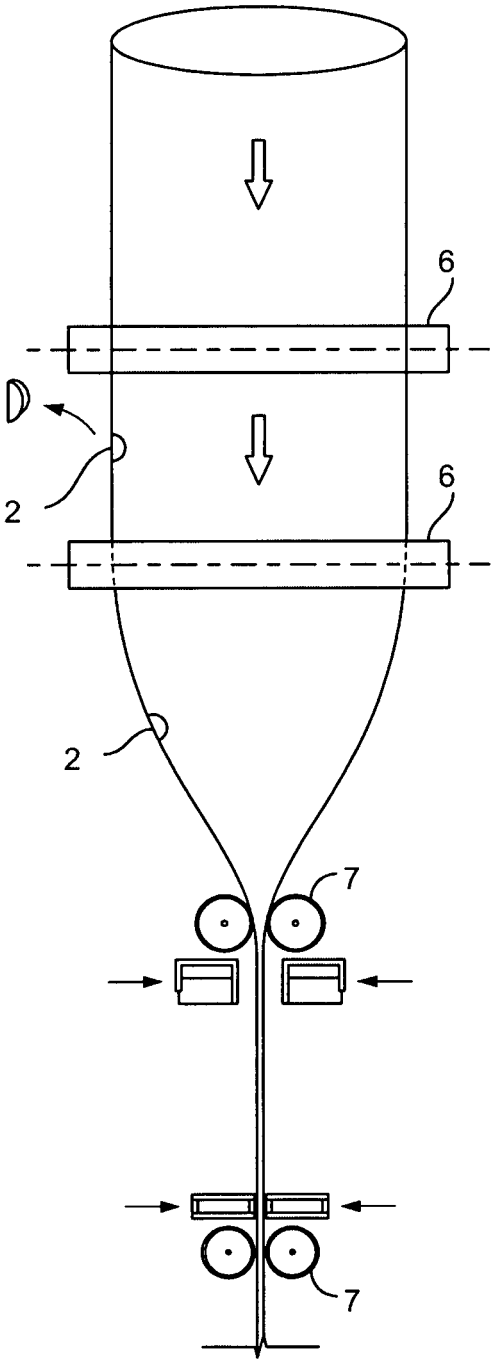

FIG. 2A

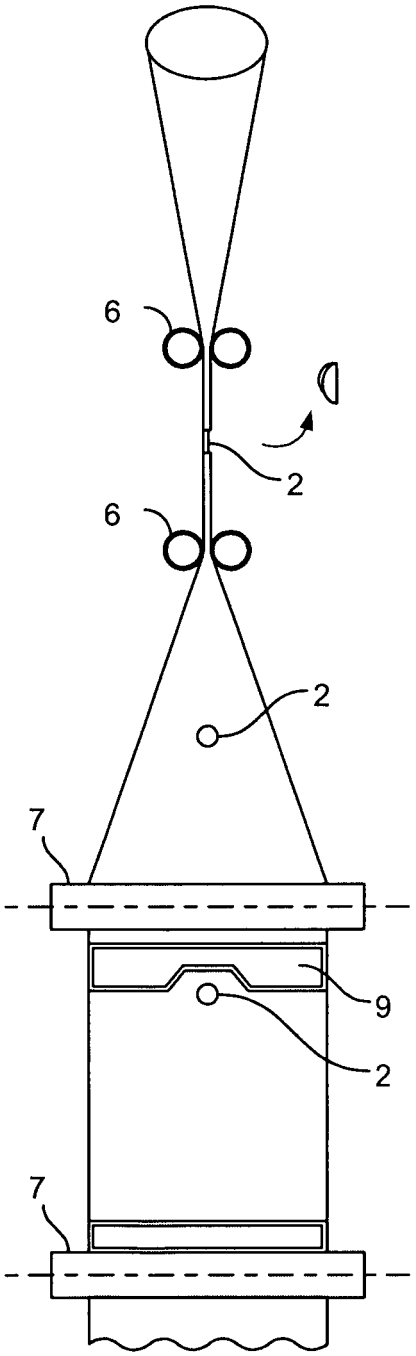

FIG. 2B

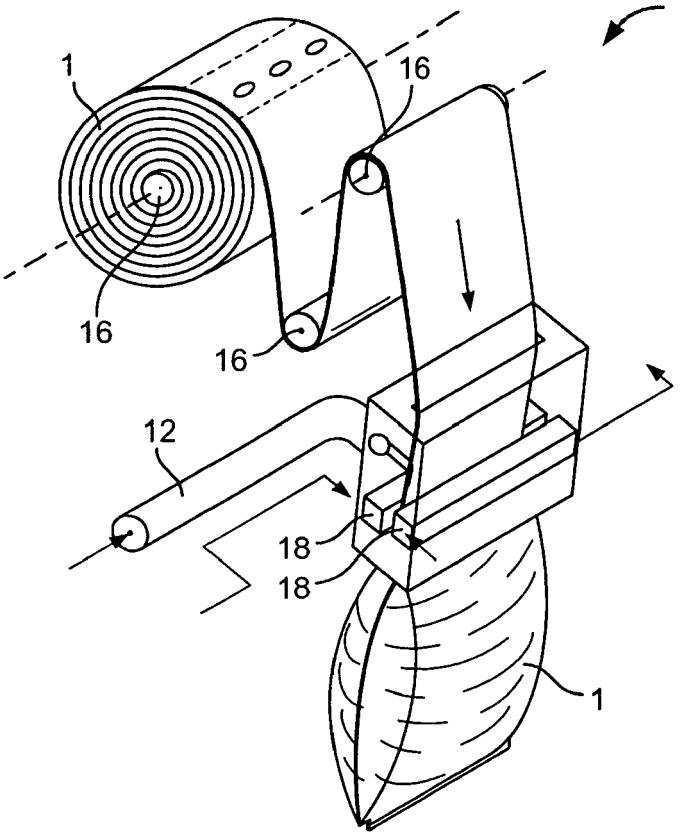

FIG. 3

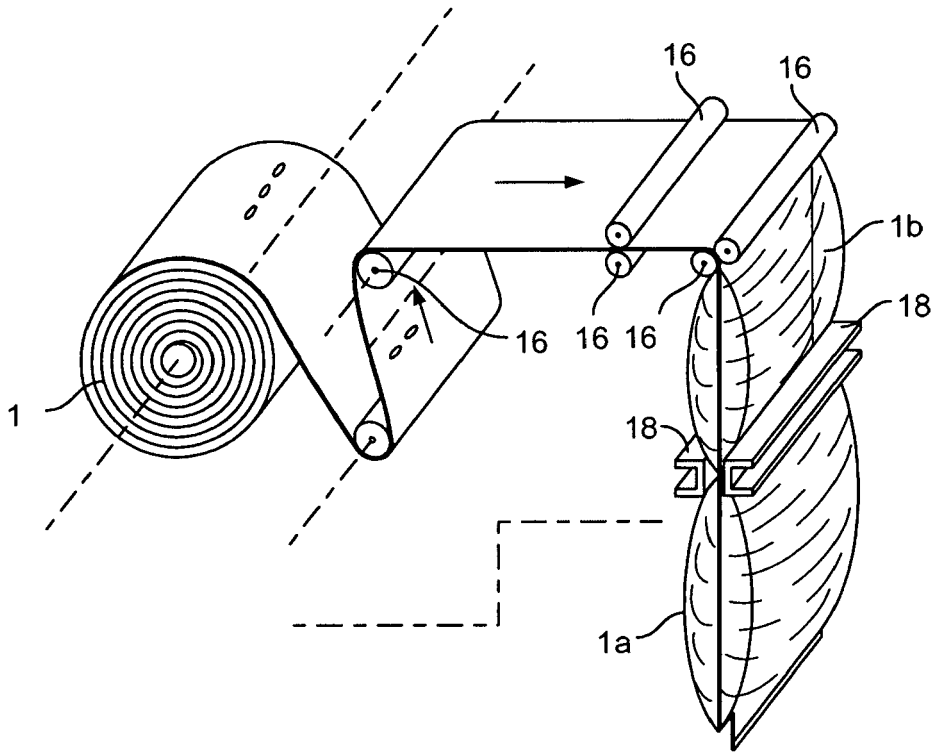

FIG. 4

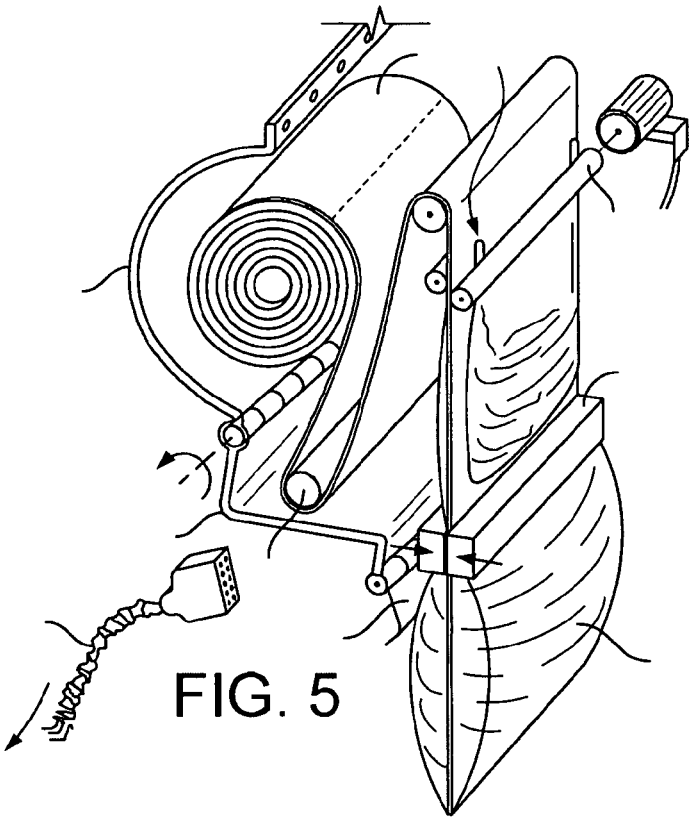

FIG. 5

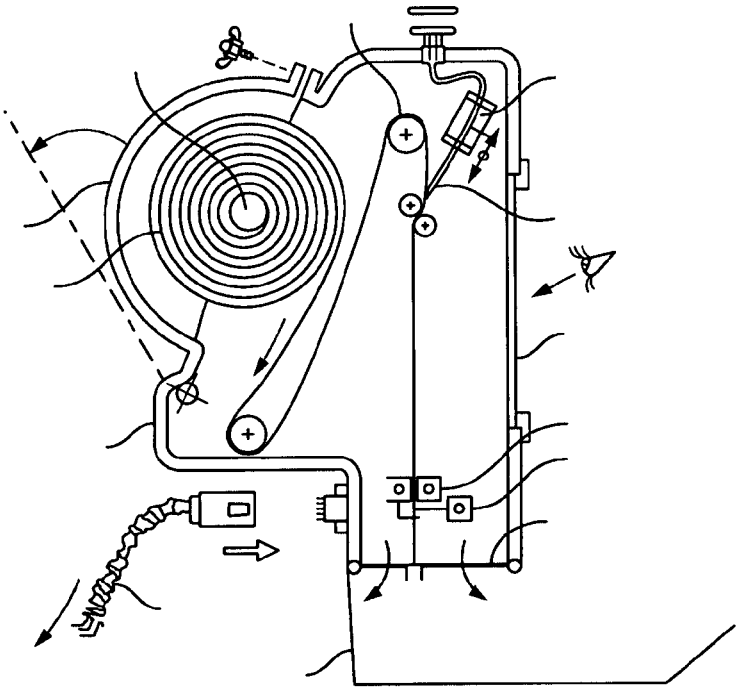

FIG. 6

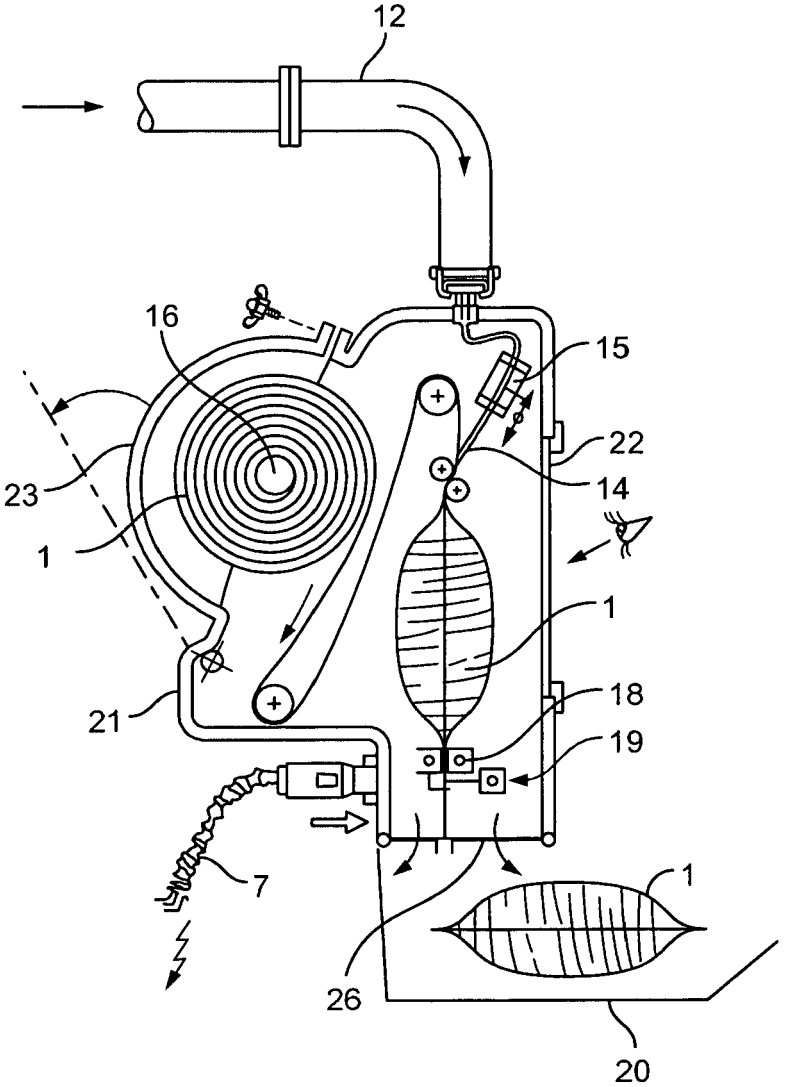

FIG. 7

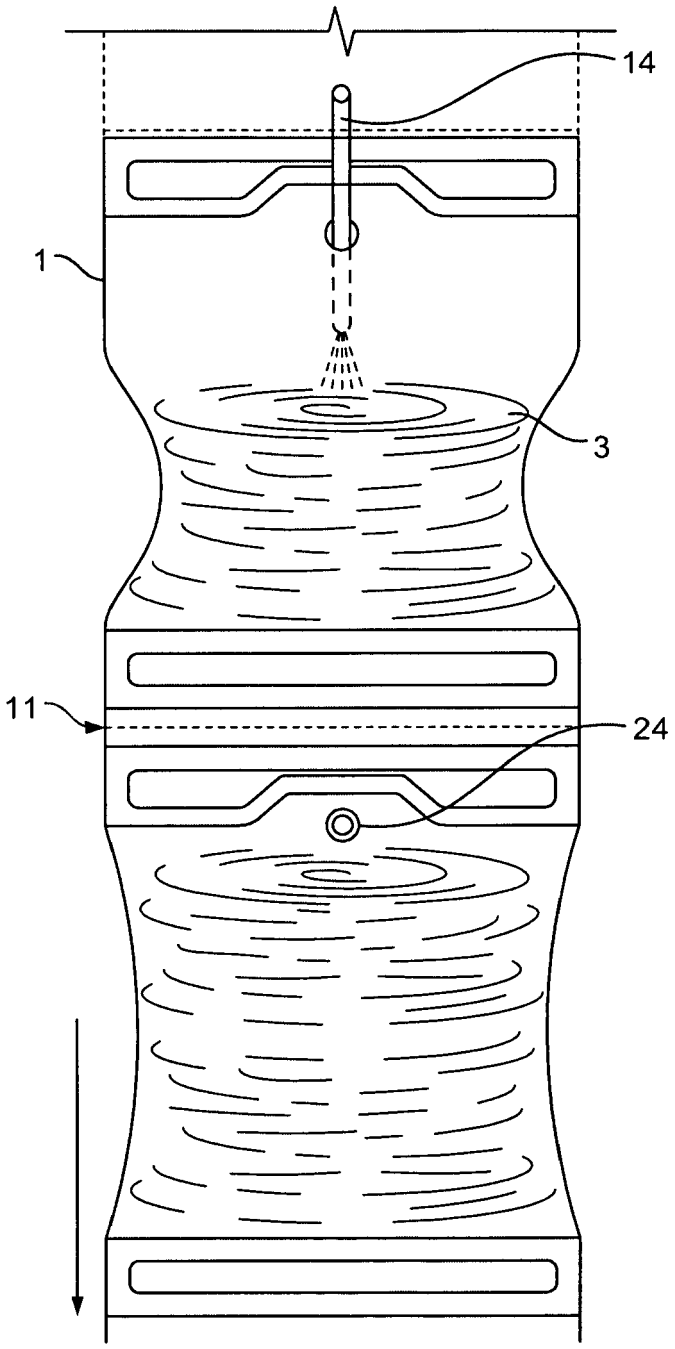

FIG. 8

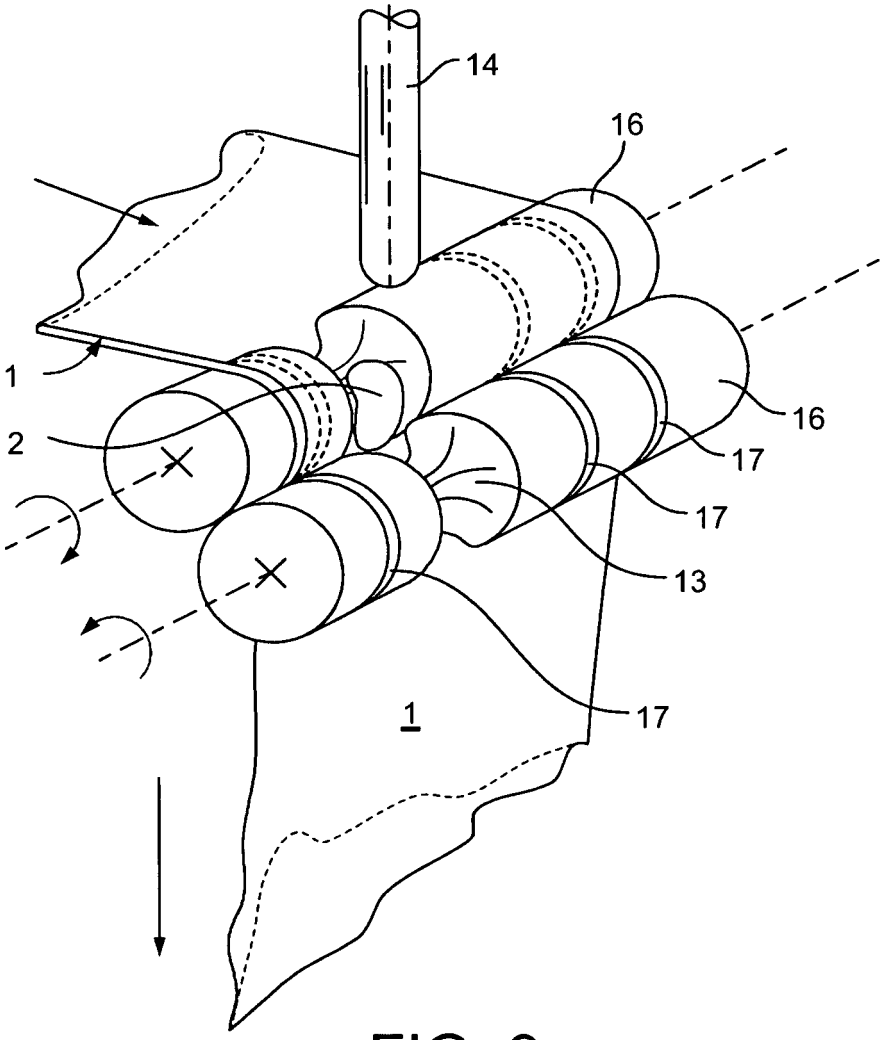

FIG. 9

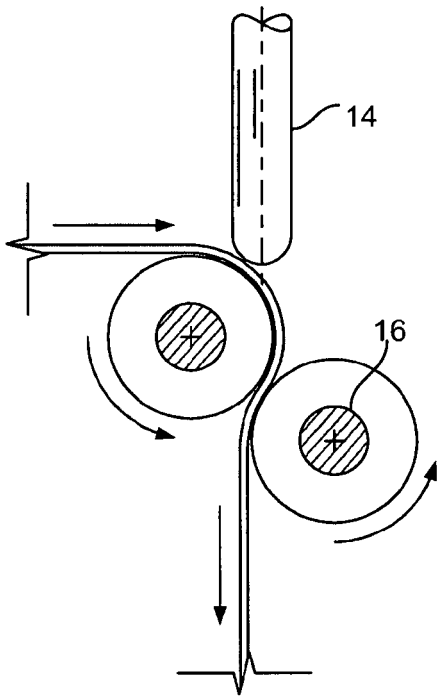

FIG. 10

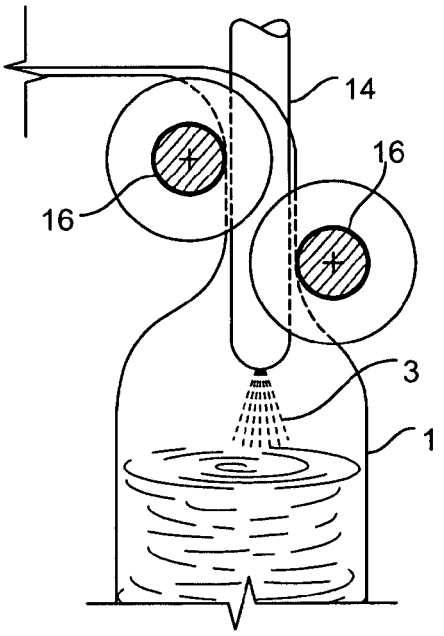

FIG. 11

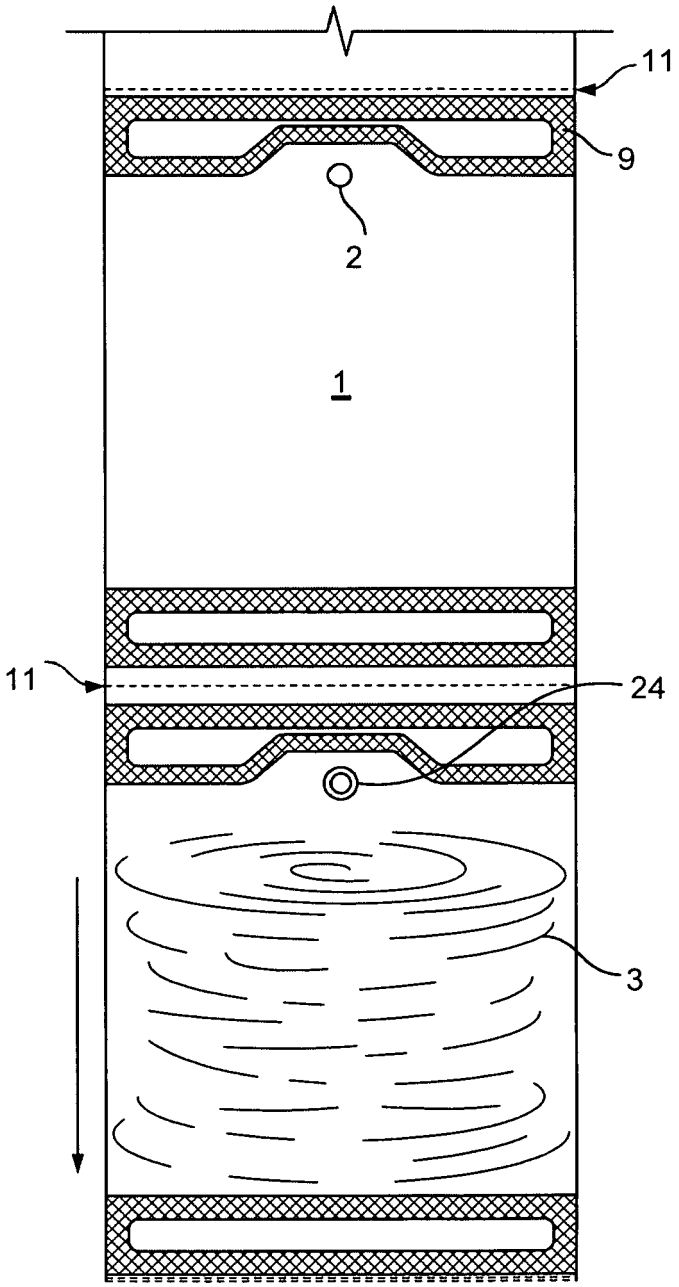

FIG. 12

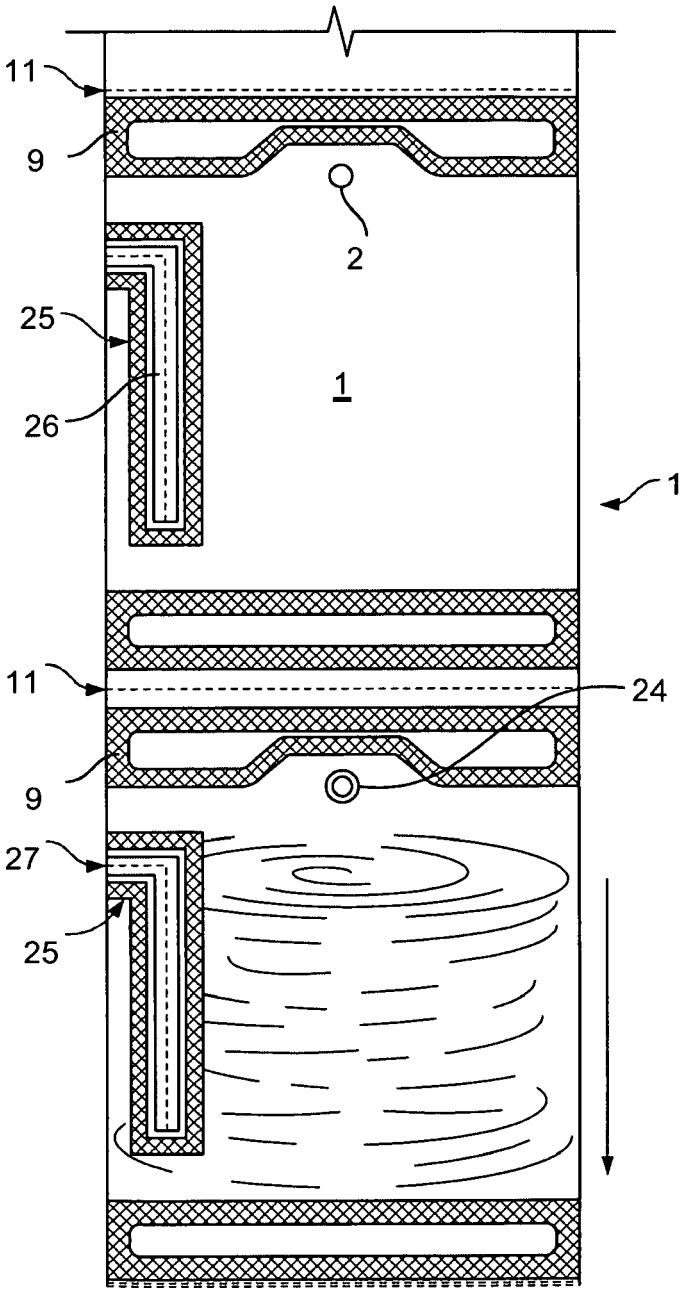

FIG. 13

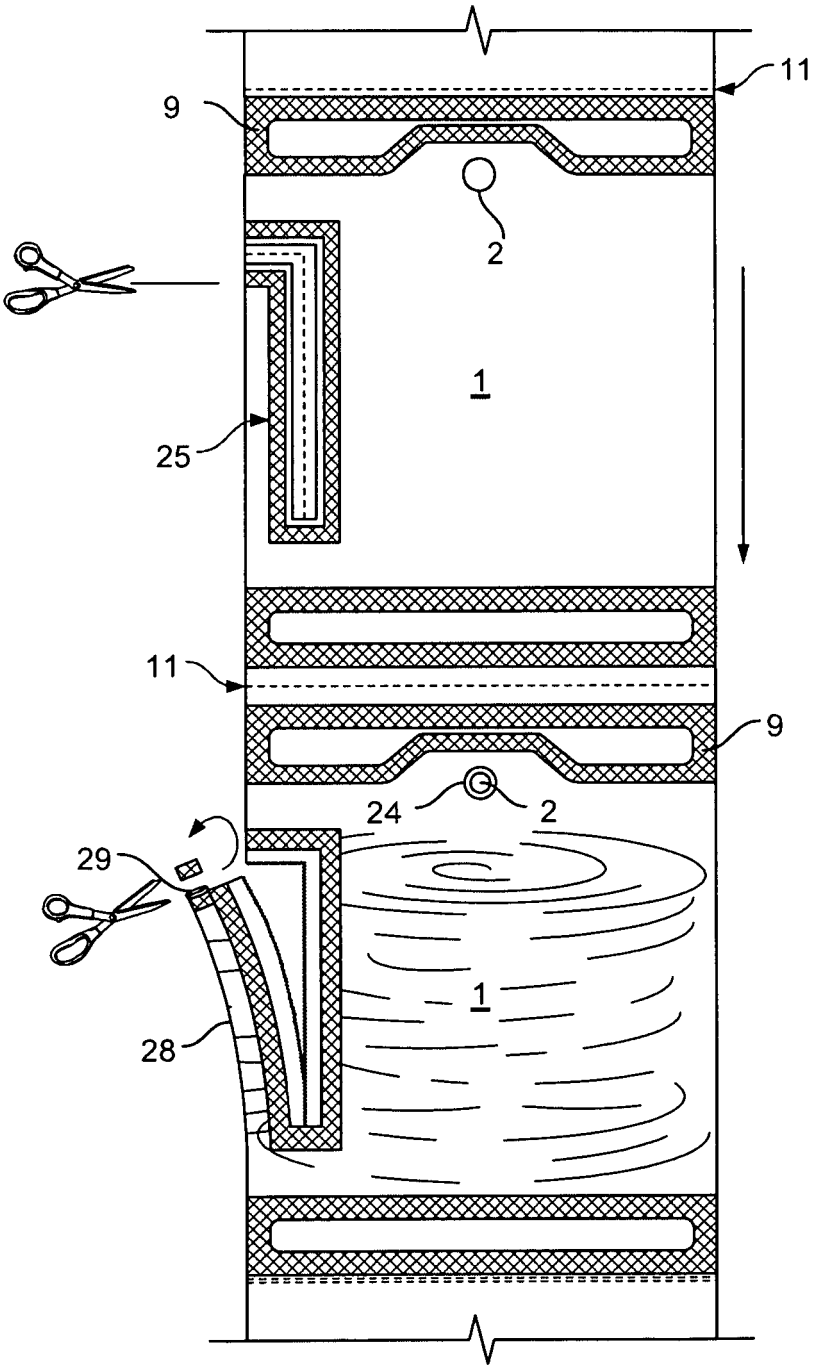

FIG. 14

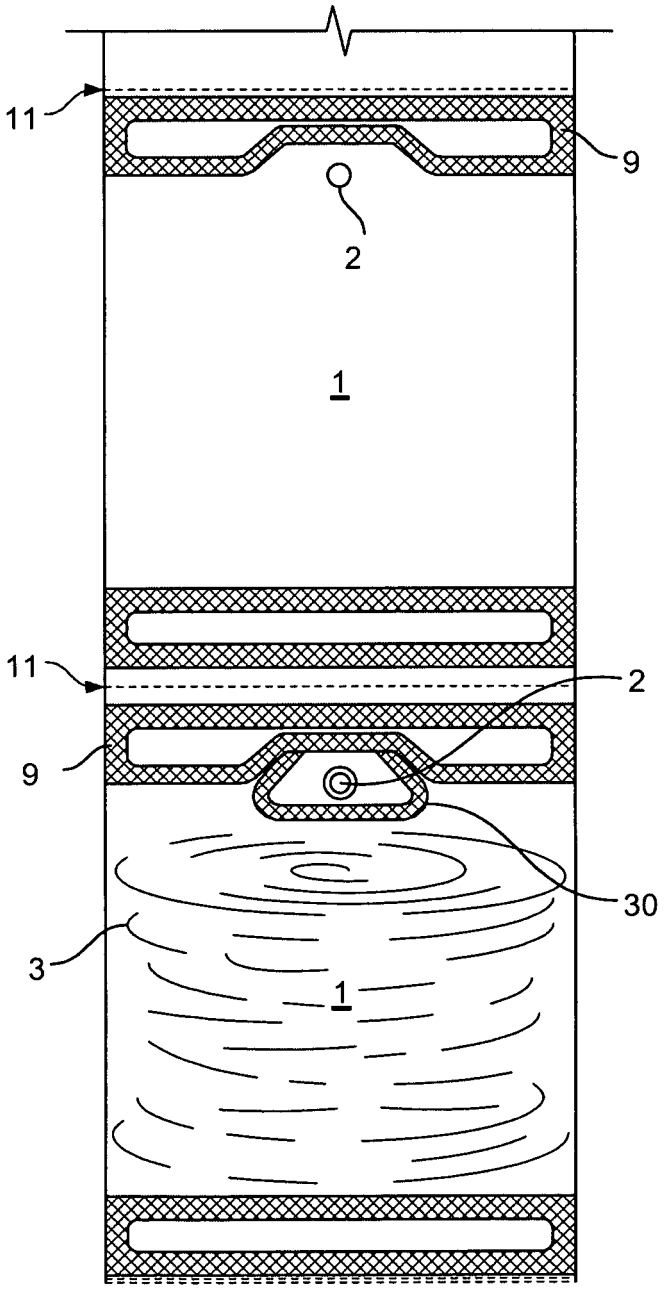

FIG. 15

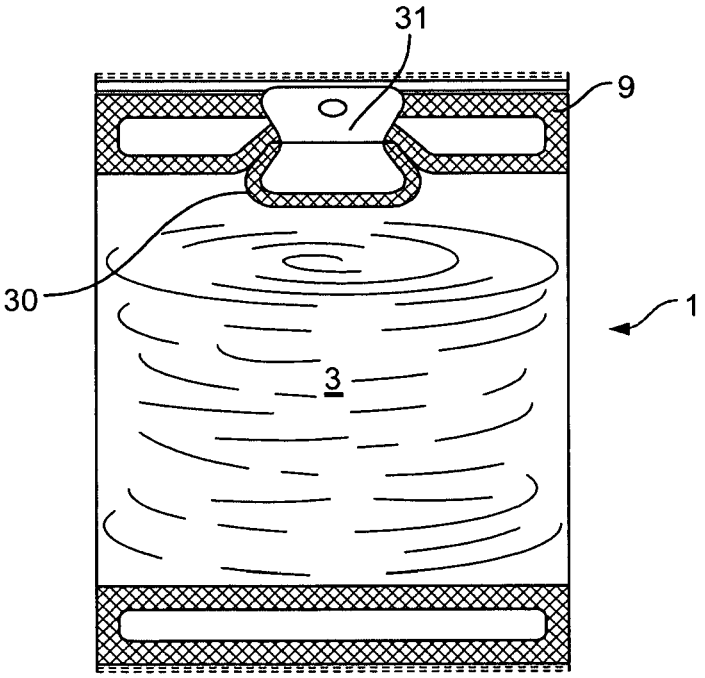

FIG. 16

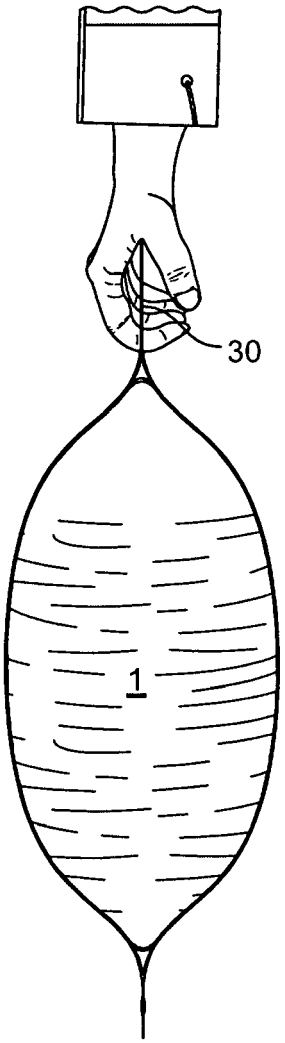

FIG. 17

Europäisches Patentamt
European Patent Office
Office européen des brevets

EUROPEAN SEARCH REPORT

Application Number
EP 09 00 5791

DOCUMENTS CONSIDERED TO BE RELEVANT

Category	Citation of document with indication, where appropriate, of relevant passages	Relevant to claim	CLASSIFICATION OF THE APPLICATION (IPC)
X	US 4 346 546 A (TASKER SIDNEY) 31 August 1982 (1982-08-31)	12	INV. B65D30/24
Y	* column 2, line 55 - column 12, line 21; figures 1-21 *	1-4,6,9, 11,15,16	B65B9/13
A		8,10,13	ADD. B65D75/46

Y	GB 1 247 191 A (AUTOPACK LTD) 22 September 1971 (1971-09-22) * page 1, line 68 - page 2, line 88; figure *	1-4,6,9, 11	B65D75/48

Y	DE 29 19 567 A1 (ANIDRITI ORESTE [IT]; MINELLI LUCIANO [IT]) 29 November 1979 (1979-11-29) * page 14 - page 23; figures 1-3 *	1-4,6,7, 9,11	

Y	US 3 760 558 A (KAMINSKY I ET AL) 25 September 1973 (1973-09-25) * column 3, line 3 - column 4, line 40; figures 1-3 *	1-4,6,9, 11	
	---		TECHNICAL FIELDS SEARCHED (IPC)
Y	FR 2 691 945 A (PERRET MICHEL [FR]) 10 December 1993 (1993-12-10)	1-4,6,7, 9,11	B65D
A	* page 2, line 13 - line 24; figure 1 *	5	B65B

Y	WO 2004/108534 A (LINDNER WOLFGANG [AT]) 16 December 2004 (2004-12-16)	15,16	
A	* page 7 - page 10; claims 1-45; figures 1-9 *	14	

The present search report has been drawn up for all claims

4

Place of search	Date of completion of the search	Examiner
Munich	27 August 2009	Fitterer, Johann

CATEGORY OF CITED DOCUMENTS

X : particularly relevant if taken alone
Y : particularly relevant if combined with another document of the same category
A : technological background
O : non-written disclosure
P : intermediate document

T : theory or principle underlying the invention
E : earlier patent document, but published on, or after the filing date
D : document cited in the application
L : document cited for other reasons

& : member of the same patent family, corresponding document

EPO FORM 1503 03.82 (P04C01)

ANNEX TO THE EUROPEAN SEARCH REPORT ON EUROPEAN PATENT APPLICATION NO. EP 09 00 5791

This annex lists the patent family members relating to the patent documents cited in the above-mentioned European search report.
The members are as contained in the European Patent Office EDP file on
The European Patent Office is in no way liable for these particulars which are merely given for the purpose of information.

27-08-2009

Patent document cited in search report	Publication date	Patent family member(s)	Publication date
US 4346546 A	31-08-1982	NONE	
GB 1247191 A	22-09-1971	NONE	
DE 2919567 A1	29-11-1979	FR 2425983 A1	14-12-1979
		IT 1106665 B	18-11-1985
US 3760558 A	25-09-1973	DE 2147567 A1	20-07-1972
		FR 2120751 A5	18-08-1972
		GB 1335288 A	24-10-1973
		IT 938846 B	10-02-1973
		SE 409315 B	13-08-1979
		SU 322039 A1	19-10-1973
FR 2691945 A	10-12-1993	NONE	
WO 2004108534 A	16-12-2004	AT 7676 U1	25-07-2005

EPO FORM P0459

For more details about this annex : see Official Journal of the European Patent Office, No. 12/82