(No Model.) 8 Sheets—Sheet 1.

J. H. VAILE.

PROCESS OF AND APPARATUS FOR EXPRESSING OIL AND REGULATING THE ACTION OF HYDROSTATIC PRESSES.

No. 456,606. Patented July 28, 1891.

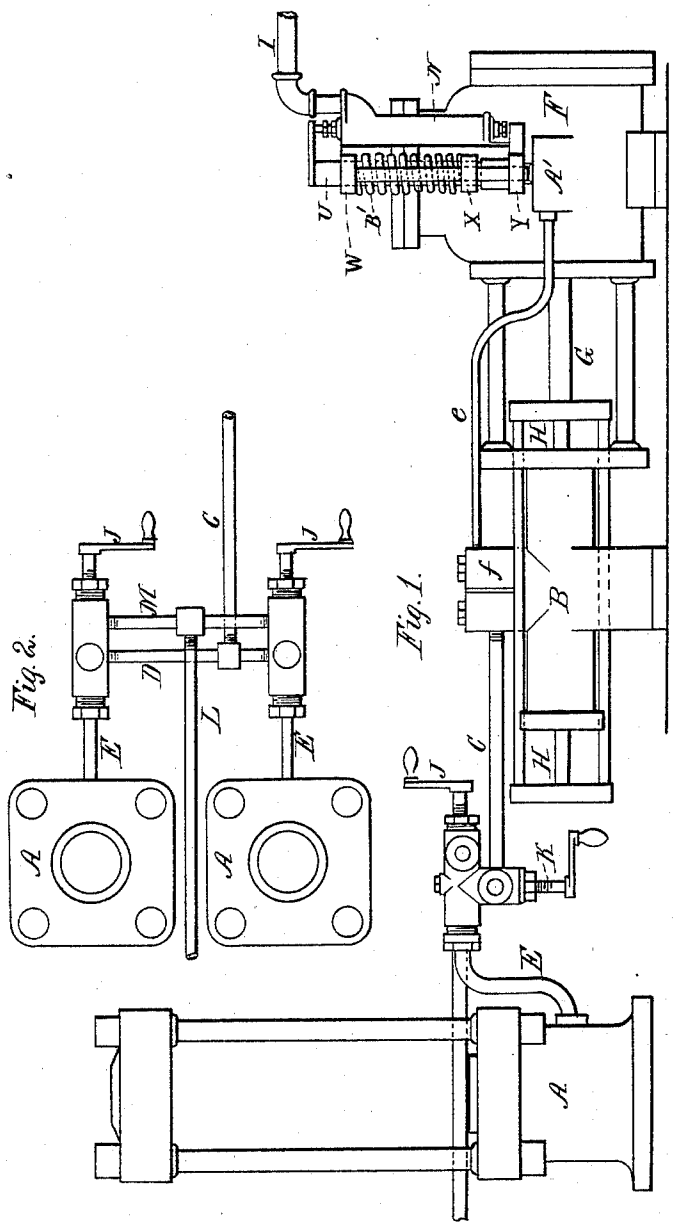

WITNESSES:
E. W. Peckar
N. M. Mayer

INVENTOR
Jno H. Vaile
BY Stern & Peck
his ATTORNEYS

THE NORRIS PETERS CO., PHOTO-LITHO., WASHINGTON, D. C.

(No Model.) 8 Sheets—Sheet 2.

J. H. VAILE.

PROCESS OF AND APPARATUS FOR EXPRESSING OIL AND REGULATING THE ACTION OF HYDROSTATIC PRESSES.

No. 456,606. Patented July 28, 1891.

Fig. 3.

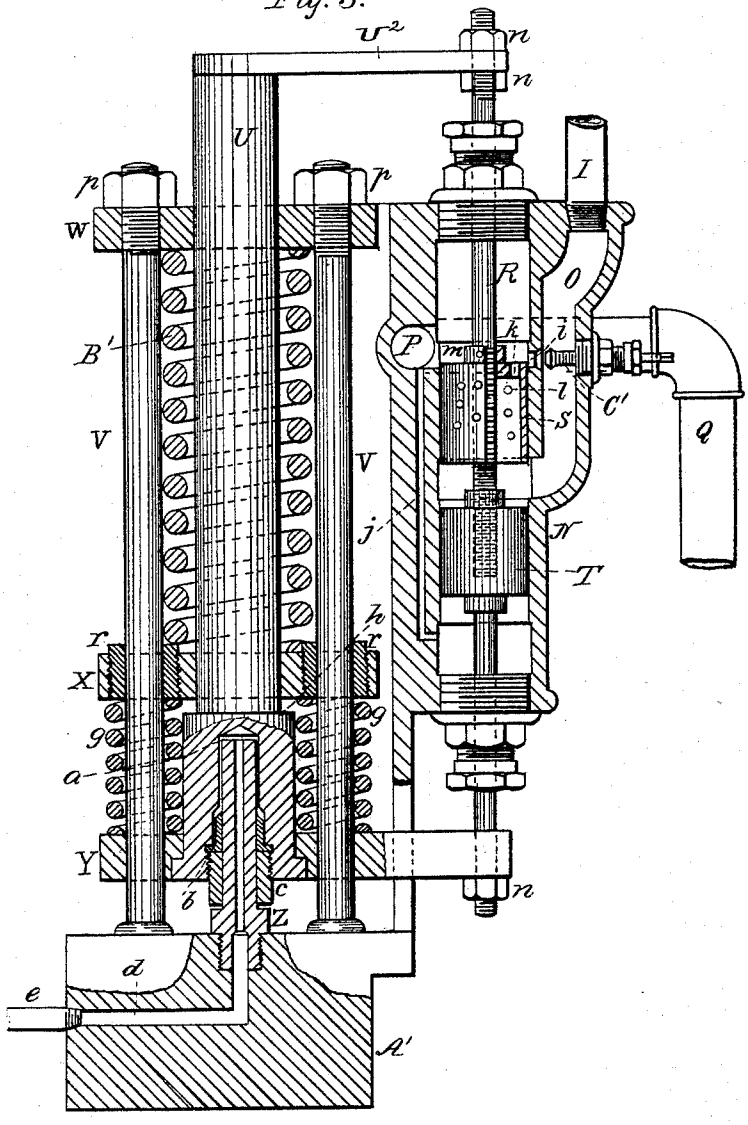

WITNESSES:

E. W. Rector

N. M. Mayer

INVENTOR

Jno. H. Vaile

BY Steen & Peck

his ATTORNEYS

THE NORRIS PETERS CO., PHOTO-LITHO., WASHINGTON, D. C.

(No Model.) 8 Sheets—Sheet 3.

J. H. VAILE.

PROCESS OF AND APPARATUS FOR EXPRESSING OIL AND REGULATING THE ACTION OF HYDROSTATIC PRESSES.

No. 456,606. Patented July 28, 1891.

Fig. 4.

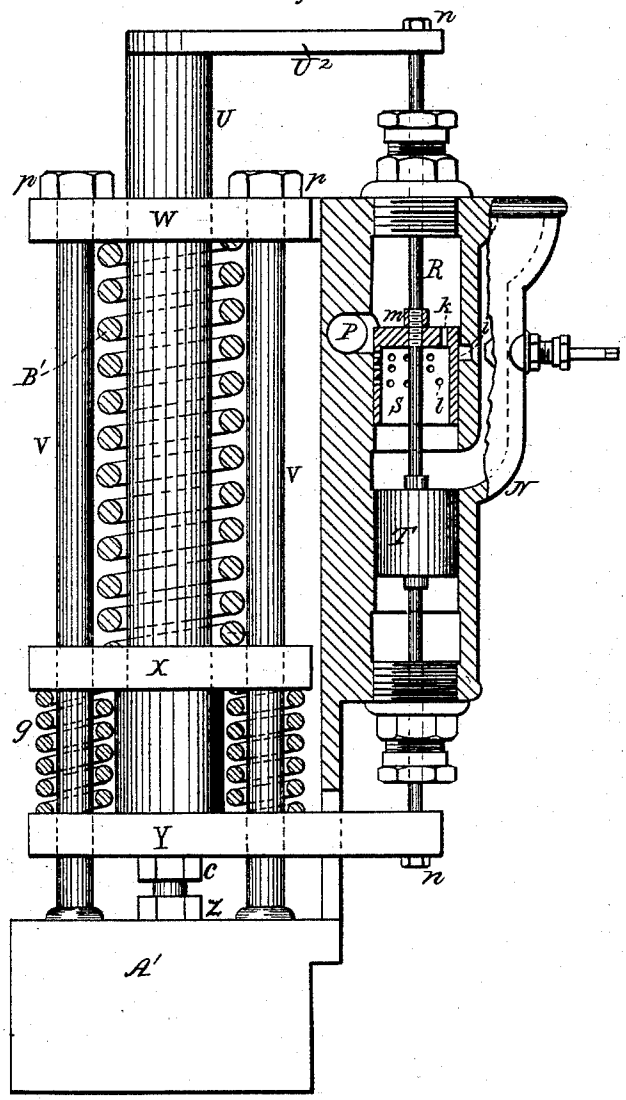

WITNESSES:

E. W. Rector

N. M. Mayer

INVENTOR

Jno H. Vaile

BY Stevens & Peck

his ATTORNEYS

THE NORRIS PETERS CO., PHOTO-LITHO., WASHINGTON, D. C.

(No Model.) 8 Sheets—Sheet 4.

J. H. VAILE.

PROCESS OF AND APPARATUS FOR EXPRESSING OIL AND REGULATING THE ACTION OF HYDROSTATIC PRESSES.

No. 456,606. Patented July 28, 1891.

Fig. 5.

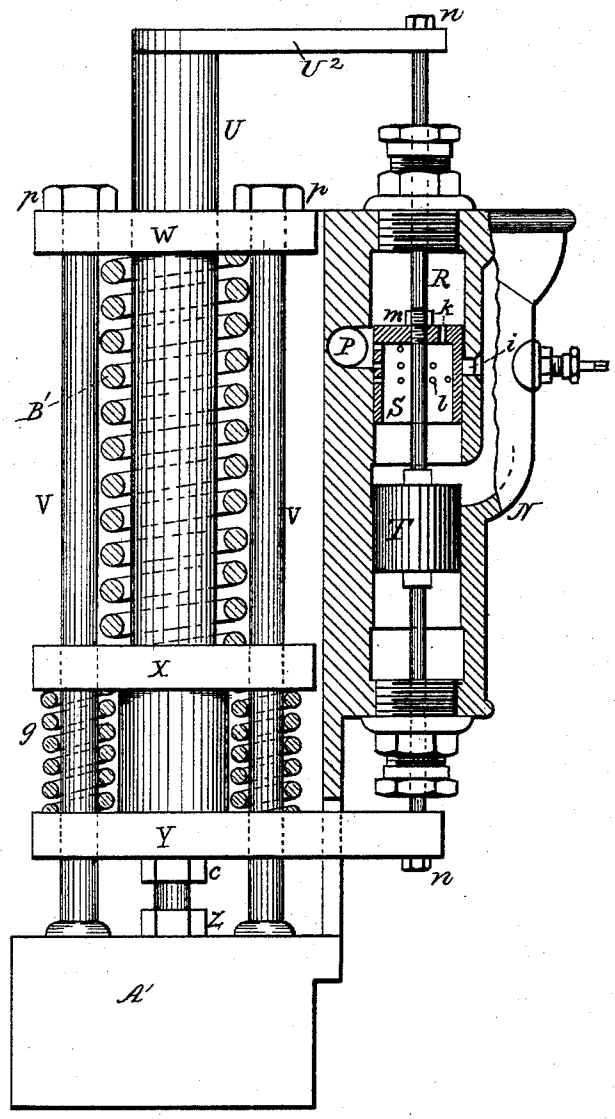

WITNESSES:

E. C. Rector

N. M. Mayer

INVENTOR

Jno H. Vaile

BY Adams & Cox

His ATTORNEYS

THE NORRIS PETERS CO., PHOTO-LITHO., WASHINGTON, D. C.

(No Model.) 8 Sheets—Sheet 5.

J. H. VAILE.

PROCESS OF AND APPARATUS FOR EXPRESSING OIL AND REGULATING THE ACTION OF HYDROSTATIC PRESSES.

No. 456,606. Patented July 28, 1891.

Fig. 6.

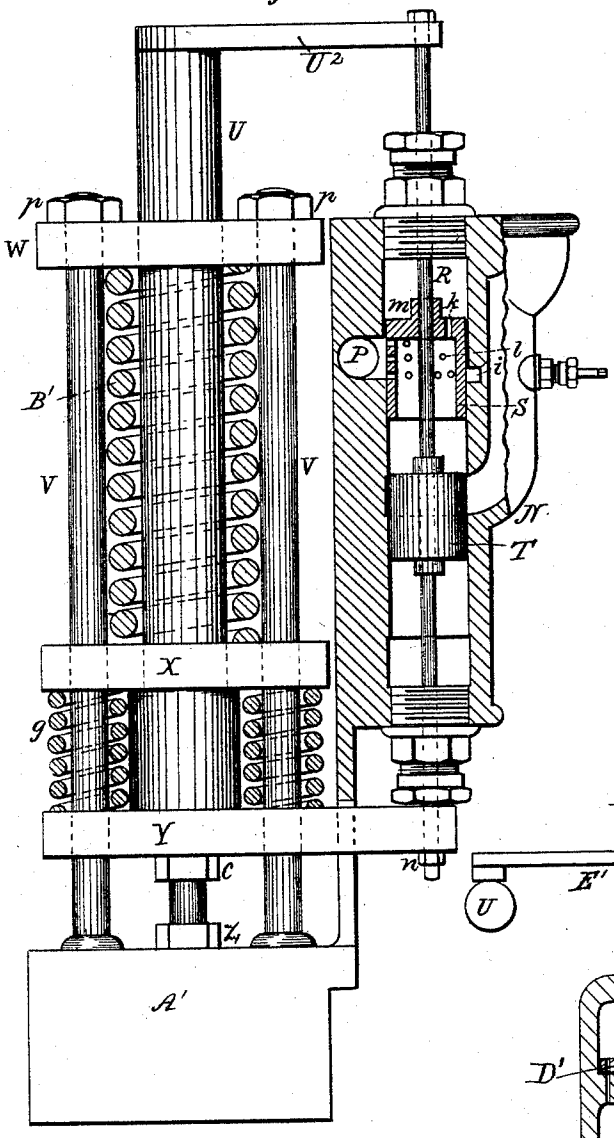

Fig. 7.

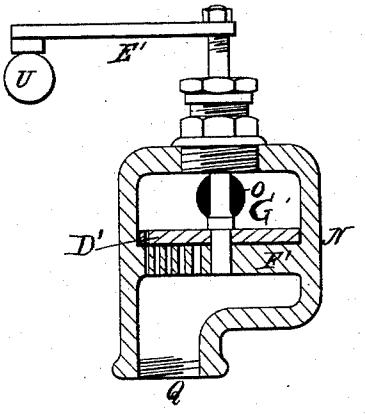

Fig. 8.

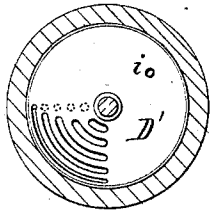

WITNESSES:

E. W. Rector

M. M. Mayer

INVENTOR

Jno H. Vaile

BY Steuart Peck

his ATTORNEYS

THE NORRIS PETERS CO., PHOTO-LITHO., WASHINGTON, D. C.

(No Model.) 8 Sheets—Sheet 6.

J. H. VAILE.

PROCESS OF AND APPARATUS FOR EXPRESSING OIL AND REGULATING THE ACTION OF HYDROSTATIC PRESSES.

No. 456,606. Patented July 28, 1891.

Fig. 10.

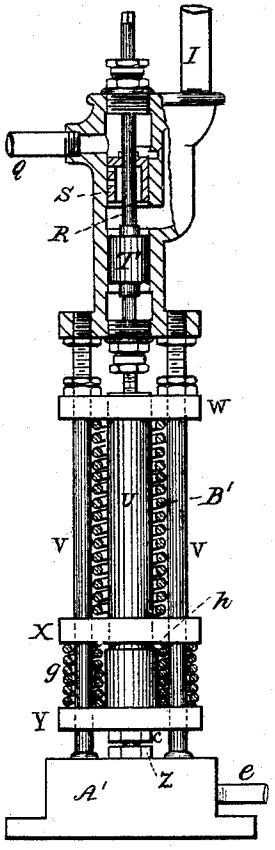

Fig. 9.

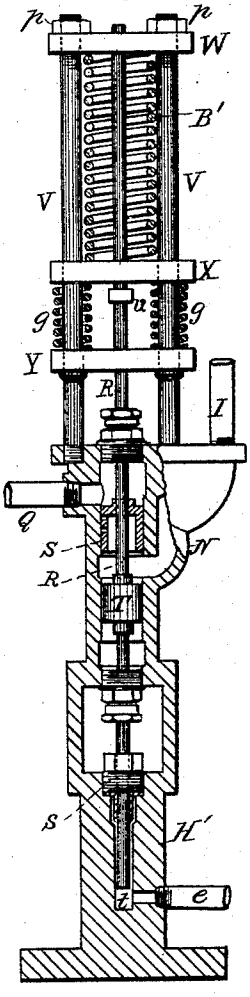

WITNESSES:

E. W. Bector

N. M. Mayer

INVENTOR

Jno H. Vaile

BY Stetson Cook

his ATTORNEYS

THE NORRIS PETERS CO., PHOTO-LITHO., WASHINGTON, D. C.

(No Model.) 8 Sheets—Sheet 7.

J. H. VAILE.

PROCESS OF AND APPARATUS FOR EXPRESSING OIL AND REGULATING THE ACTION OF HYDROSTATIC PRESSES.

No. 456,606. Patented July 28, 1891.

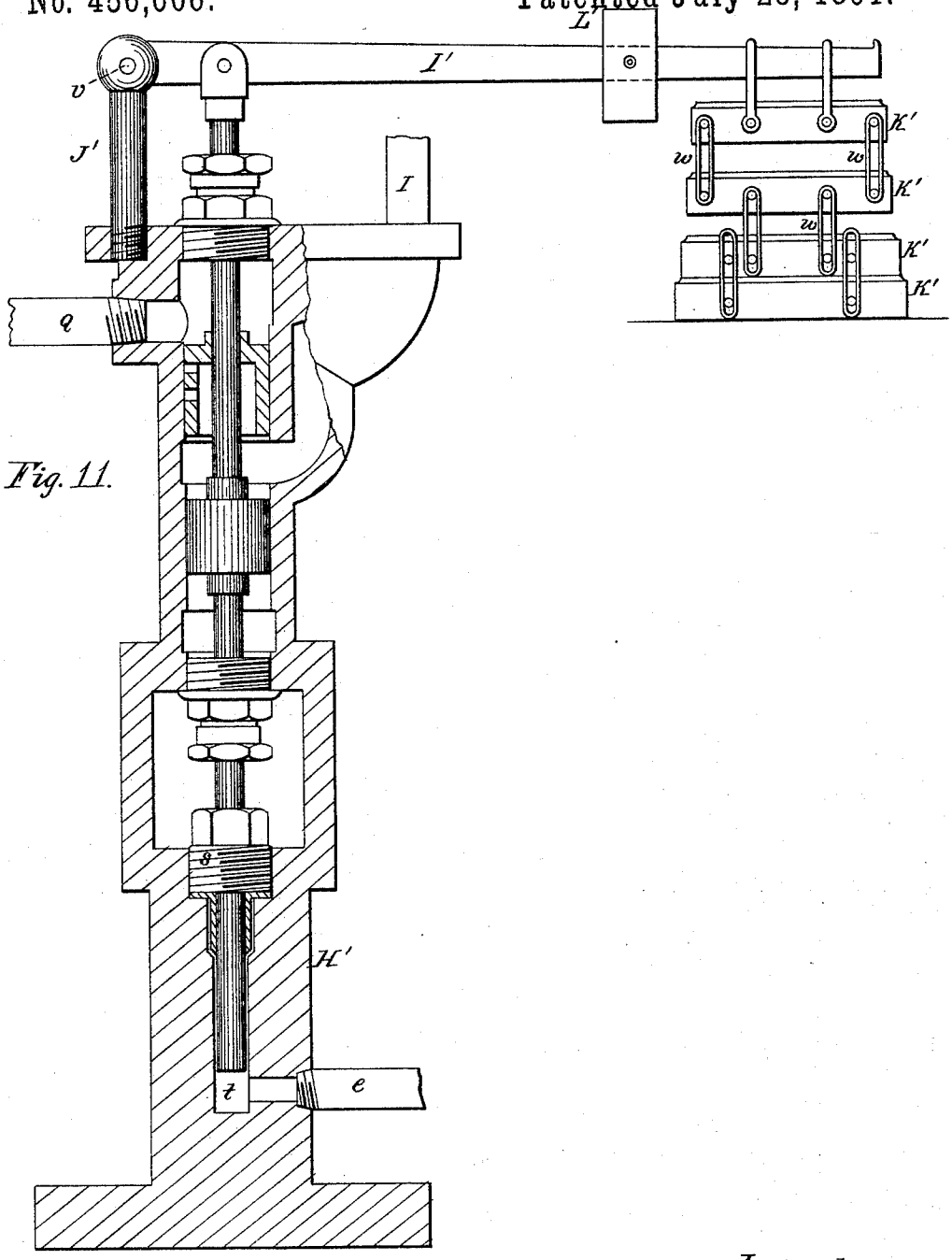

Fig. 11.

Witnesses:
E. W. Rector
N. M. Mayer

Inventor:
Jno H. Vaile
by Stein & Peck
his Attorneys.

THE NORRIS PETERS CO., PHOTO-LITHO., WASHINGTON, D. C.

(No Model.) 8 Sheets—Sheet 8.

J. H. VAILE.

PROCESS OF AND APPARATUS FOR EXPRESSING OIL AND REGULATING THE ACTION OF HYDROSTATIC PRESSES.

No. 456,606. Patented July 28, 1891.

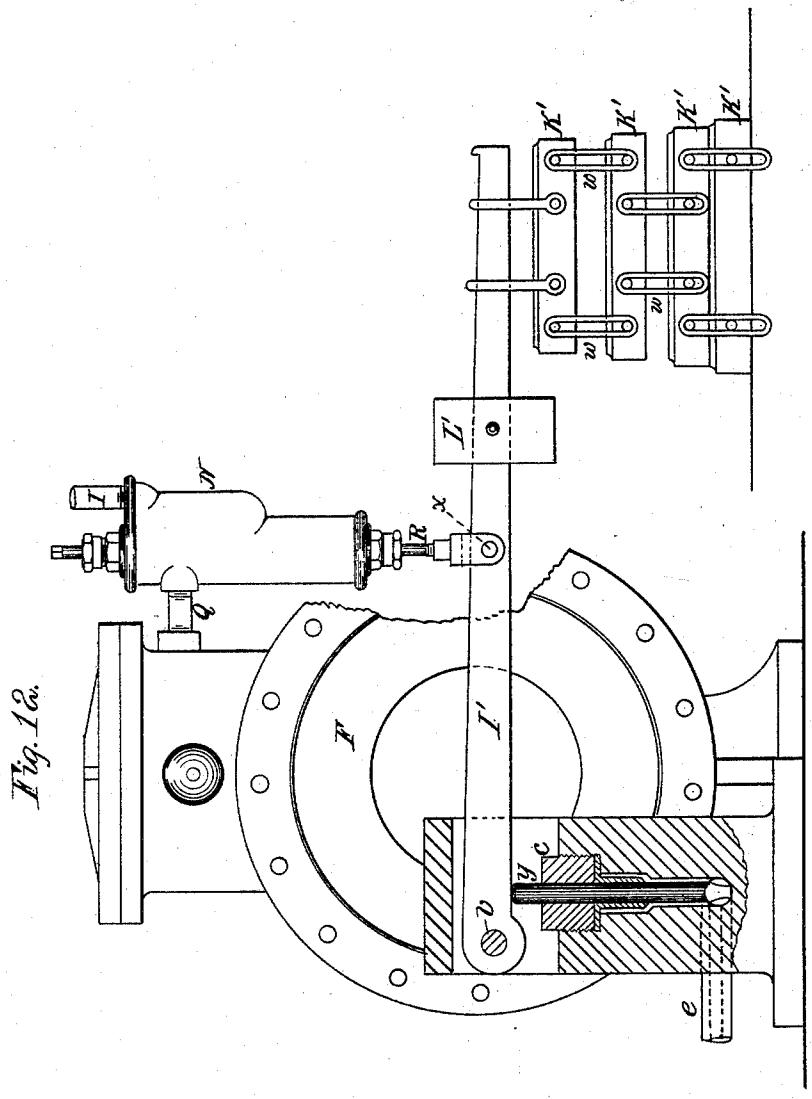

Fig. 12.

WITNESSES:
E. C. Rector
N. M. Mayer

INVENTOR
Jno. H. Vaile
BY Steuart Bros
his ATTORNEYS

THE NORRIS PETERS CO., PHOTO-LITHO., WASHINGTON, D. C.

UNITED STATES PATENT OFFICE.

JOHN H. VAILE, OF DAYTON, OHIO.

PROCESS OF AND APPARATUS FOR EXPRESSING OIL AND REGULATING THE ACTION OF HYDROSTATIC PRESSES.

SPECIFICATION forming part of Letters Patent No. 456,606, dated July 28, 1891.

Application filed May 20, 1886. Serial No. 202,799. (No model.)

To all whom it may concern:

Be it known that I, JOHN H. VAILE, a citizen of the United States, residing at Dayton, in the county of Montgomery and State of Ohio, have invented certain new and useful Improvements in the Process of and Apparatus for Expressing Oil and Regulating and Controlling the Action of Hydrostatic Presses, of which the following is a full, clear, and exact description, reference being had to the accompanying drawings, forming a part of this specification.

My invention relates to all classes of presses or pressure devices wherein a liquid is used to exert the pressure, and wherein a steam-pump is used to compress the liquid and create the pressure to be transmitted by the liquid to the substance to be compressed, and as coming primarily within the object of my invention it relates to hydrostatic presses for expressing oil from meal, seeds, or other oleaginous substances.

It has for its object the simplification of the construction of this class of presses and the rendering of the action of the same as nearly automatic as possible, though it is applicable to a much wider range of uses.

Its novelty will be herein set forth and specifically pointed out in the claims.

In the accompanying drawings Figure 1, Sheet 1, is a side elevation of so much of the apparatus as is necessary to illustrate my invention. Fig. 2, Sheet 1, is a plan view of a pair or series of presses and connecting pipes and valves. Fig. 3, Sheet 2, is a sectional elevation of the governor and valve mechanisms at the first state of the operation. Fig. 4, Sheet 3, represents the governor and valve mechanisms, partially in section, at the second stage of the operation. Fig. 5, Sheet 4, is a corresponding view showing the parts at the third stage of the operation. Fig. 6, Sheet 5, is a corresponding view showing the parts at the fourth stage of the operation. Figs. 7 and 8, Sheet 5, are detail views of a modification of the valve mechanism to be explained hereinafter. Fig. 9, Sheet 6, represents a sectional elevation of a modification of the valve mechanism and means for operating the same. Fig. 10, Sheet 6, is a view, partly in section, showing another modification. Fig. 11, Sheet 7, is a sectional elevation of another modification. Fig. 12, Sheet 8, is an elevation, partly in section, of another modification.

The same letters of reference are used to indicate identical parts in all the figures.

In the use of presses for expressing oil from oleaginous substances of a thin consistency—such, for instance, as cotton-seed meal—there is liability after the pressure has been applied, owing to the speed and force with which the press acts, of causing the meal-containing cloth or bag to burst and the meal and oil to be squeezed out at the ends and sides of the press, which is very objectionable. I purpose to remedy this difficulty by causing the pressure of the liquid in the press, generated by the resistance of the meal and the action of the steam-pump, to automatically control and regulate the admission of steam to the steam-pump and the consequent speed and force of the pressure exerted on the substance being compressed, and in such manner that the speed of the pump will rapidly carry the press into working contact and up to the point where oil begins to be expressed, after which the extent of resistance determines and regulates the speed of the pump and consequent further extent of the pressure, as will be best understood by reference to the accompanying drawings and the operation of the parts therein illustrated, which I will now describe.

In Figs. 1 and 2, A A may be taken to be a pair of ordinary oil-presses; B, any suitable pump connected by pipes C, D, and E to the presses. F is the usual or any suitable steam-cylinder whose piston is connected by the rod G to the pump-rods H. I is the steam-pipe for admitting steam to the cylinder F. J J are the exhaust-valve handles, and K the inlet valve-handles, of the press. L is the exhaust-pipe communicating with each press by a branch M. All of these parts may be of the usual or any suitable construction.

Anywhere in the line of the pipe I, but preferably near the steam-cylinder, and in this instance at the side of the same, I place the valve and governor mechanisms, illustrated more particularly in Figs. 3, 6, 7, and 8, where N is the valve-chamber, in this in-

stance a vertical cylinder with a steam-inlet O, and steam-outlet P, which communicates with the pipe Q, leading to the steam-cylinder. R is the valve-rod, extending through the cylinder N and carrying a perforated cylindrical main valve S and a supplemental cylindrical cut-off valve T. The upper end of the valve-rod R is connected in any suitable manner, preferably by a rigid connection, such as a cross-arm u^2, with a vertical plunger-rod U, which is guided between uprights V through a stationary cross-head W and movable cross-heads X and Y, to the latter one Y of which it is rigidly connected at its lower end. This latter cross-head Y is likewise connected to the lower projecting end of the valve-rod R, as shown. The lower end of the plunger U is provided with a central bore *a*, in which is fitted a hollow plug Z, secured at its lower end to a block A′, which may be attached to or project from the side of the steam-cylinder F and to which the uprights V are secured. This plug Z is fitted into the bore of the plunger by means of a packing *b* and stuffing-box *c*. The block A′ is provided with a port *d*, communicating with the bore of the plug Z, and a pipe *e* connects said port with a chamber *f* upon and having free communication with the interior of the pump B. The cross-head X is supported upon springs *g*, surrounding the uprights V, and the plunger U is provided with a shoulder or offset *h*, which is some little distance below said cross-head X at the commencement of the operation of the parts. A larger spiral spring B′ is confined between the cross-heads W and X and surrounds the plunger U. It will be observed that the steam-inlet to the cylinder N is located between the main valve S and cut-off valve T, and that a supplemental steam-inlet *i* opens from the main inlet O just above the main valve S. The location of the discharge-port P is just above the valve S and a port *j* is formed, connecting said outlet P with the lower part of the cylinder N beneath the valve T, in order to more completely balance both valves. An adjustable plug C′ is passed through the inlet O, so as to cover, close, and regulate the extent of opening, if desired, of the port *i*. It will be observed that the main valve S is in the form of a shell closed at its top and open at its bottom. There is, however, a small perforation *k* through the top, for a purpose to be presently explained. In addition to this perforation there are rows of perforations *l* through the side of the shell. Just above the top of the main valve S the cylinder N is chambered out, as at *m*, said chambered-out portion communicating with the port P. By means of the nuts *n* the valve-rod R can be adjusted up or down and set at the point required.

As a means of adjusting the valves S and T with reference to each other, the valve-rod may be in two parts, the upper one of which is screwed into the cut-off valve T, as seen in Fig. 3. By this construction the valve T may be raised or lowered toward or from the valve S by turning the lower portion of the rod, which is rigidly secured to the valve T, or the valve S can be raised or lowered from or toward the valve T by turning the upper portion of the rod to which it is secured.

The normal position of the parts when at rest is that shown in Fig. 3, and it will be seen from this construction that as soon as steam is admitted to the pipe I it will pass through the port *i* over the top of the valve S, and also up through the small perforation *k* in the top of the valve S and out through the port P and pipe Q, whereupon the pump will be put in motion and the press started. As soon as any pressure is developed that pressure will be communicated through the pipe *e* and plug Z to the interior of the plunger U, which will begin to ascend and carry with it the valve-rod R and valves S and T. In ascending and thus raising the valves it will have to encounter only the resistance of the springs *g*, which are comparatively light, until the stop or shoulder *h* comes in contact with the cross-head X. The position of the valves and parts at this point is shown in Fig. 4, where it will be seen that the valve S has passed and closed the port *i* and is just beginning to uncover the upper rows of perforations *l*, through which and the perforation *k* sufficient steam is admitted to keep the pump slowly but steadily at work. It is at this stage of the operation that the oil is being the most rapidly expressed—a stage at which it is desired that only sufficient pressure be exerted to express the large bulk of easily-expressed oil, and a stage at which care must be used not to permit enough pressure to cause the meal and oil to burst the cloth or bag and be squeezed out at the sides and ends of the press. Only a small quantity of steam is therefore being admitted to the pump, mainly through the perforation *k*, and the pressure increases very slowly until the bulk of the oil having been expressed and the meal become more compact and solid greater resistance is offered to the platen of the press and the pressure of the liquid in the press and pump consequently increased, which pressure is communicated through the pipe *e* and plug Z to the plunger U, causing the latter to overcome the resistance of the spring B′ and continue to rise, carrying up the valves S and T and uncovering the upper rows of perforations *l*. More steam being thus admitted to the pump the force of its action is increased, the pressure of the liquid in the press and pump increased, the increased pressure transmitted through the pipe *e* and plug Z to the plunger U, the latter further raised with the valves S and T, and more and more of the perforations *l* gradually exposed. This position of the parts is shown in Fig. 5. In this manner the pressure is rapidly increased until the maximum degree desired is reached. The valves S and T are so set that as soon as the pressure reaches this maximum degree—for instance, two thousand or five

thousand pounds—the plunger U will be sufficiently raised to cause the valve T to pass and completely close the main steam-inlet O, as seen in Fig. 6, thereby cutting off all the steam and holding the press or presses up to that degree of pressure as long as desired. When the pressure is relieved by opening the exhaust-valves J, the springs B′ and *g*, assisted by the weight of the parts, cause the plunger U and valves S and T to instantly descend and resume their normal position of rest shown in Fig. 3.

It will be understood that any suitable valve (not here shown) is interposed in the main steam-pipe at a point between the boiler and the valve mechanism for cutting off the steam during the time required in refilling the presses and again admitting it to resume the operation of pressing. It will be observed that the cross-head W is made adjustable by means of the nuts *p* for the purpose of regulating and adjusting the tension of the spring B′, and, furthermore, that the tension of the springs *g* can be regulated and adjusted by means of the screw-plugs *r*, Fig. 3, inserted either through the cross-head X or the cross-head Y, and which bear against either ends of said springs.

While I have shown as my preferred form of construction the double valves S and T and a direct connection of said valves with the plunger U, I do not wish to be limited to these constructions alone, nor, in fact, to the precise construction of any valve or valves which may be employed when said valve or valves have the functions of those described and operate automatically to first partially cut off the supply of steam from the steam-pipe, then to gradually increase the amount of steam admitted until the maximum degree of pressure desired is reached, and then to cut off all the steam. For instance, in Figs. 7 and 8 I have shown a modified form of construction of a valve, wherein a segmentally-slotted disk D′ is oscillated by a crank E′, connected by leverage or otherwise to the plunger U. This disk, provided with the supplemental inlet *i*, fits upon a perforated seat F′, extending across the valve-chamber G′, the perforations in said seat registering with the segmental slots in the disk. When steam is first admitted, it passes through the supplemental inlet *i*. As the plunger U is actuated, the disk is so rotated on the seat as to close the inlet *i* and uncover more and more of the perforations until the maximum pressure having been attained the segmental slots pass beyond the perforations, which are then covered by the solid portions of the disk.

In its application to the pressure of oleaginous materials, whether paraffine, cotton-seed, or linseed meal, or other like substances, where it is desired that the press should rest and travel very slowly during the time that the surplus oil is being most rapidly expressed, the adjustment of the parts and the tension of the springs B′ and *g* are so regulated that, as before explained, just after the port *i* has been closed and before the perforations *l* have been uncovered only sufficient steam is admitted through the perforation *k* to keep the pump working sufficiently to keep the press up to its work, thereby preventing the squeezing out of the substance with the oil, which is one of the main difficulties I seek to overcome. After this has been accomplished and the substance becomes more solidified the pressure increases so materially, owing to the increased resistance of the substance acted on, as to cause the admission of sufficient additional steam to overcome it and carry the press up to its maximum degree of pressure.

While I have shown and heretofore described the governor as a distinct and separate device for controlling the operation of the valve mechanism, yet the same as such may be dispensed with and the valve mechanism regulated and controlled by admitting the liquid, under the pressure of the press and pump, directly to the valve or valve-rod. Such a construction is illustrated in Fig. 9, where the valve-rod is shown extended at its lower end and entering through a stuffing-box *s* and constituting a piston within a coincidently-bored chamber *t* in a casting H′, into which chamber the liquid is admitted from the pipe *e*. In this manner the valve-rod receives the direct action of the pressure of the liquid. To resist this pressure in the upward travel of the valve and to reset the same, the upper end of the valve-rod may be extended up through perforations in the cross-heads W X Y, Fig. 9, supported upon the uprights V, carrying and confining the springs B′ and *g*, and may have adjustably secured to it a collar *u* to take the place of the shoulder *h*.

As a substitute for the springs, the construction shown in Fig. 11 may be employed, where the upper end of the valve-rod is pivoted to a lever I′, which is itself pivoted, as at *v*, to an upright J′ or any other stationary part, and has upon its outer end a series of pick-up weights K′, connected by links *w*, and preferably an additional sliding weight L′, by means of which the degree of resistance can be regulated as desired. Again, as shown in Fig. 10, the same governor mechanism as is illustrated in Fig. 3 may be placed under and connected directly to the valve-rod; or, further, as shown in Fig. 12, where the lever I′ and the weights K′ L′ are used, the valve-rod may be pivoted to the lever, as at *x*, and be actuated by a separate piston *y*, which is in turn actuated by the pressure of the liquid. It is also evident that the system of weights and the lever might be employed in the construction shown in Fig. 3 instead of the springs, in which case the plunger U or valve-rod would be connected directly to the lever.

If it were not for the objection that the oil, which is the usual liquid employed for actuating the presses, gums up under the action of heat, the liquid under pressure of the press and

pump might be admitted directly under the cut-off valve T, in which event said cut-off valve should be properly packed and the port *j* be dispensed with.

While I have shown the pipe *e* connected to a chamber of the pump, it is perfectly apparent that it could be connected directly with the interior of the press and the same result accomplished.

I am aware that it is not new to combine with a hydrostatic press a governor mechanism operated by the pressure of the liquid in the press and connected with the throttle-valve in the steam-pipe to gradually cut off the supply of steam to the pump as the pressure increases; but I believe I am the first to devise means for causing the pressure of the liquid in the press to automatically regulate and control the admission of steam to the pump at all points between its first admission to the pump and the point where it is finally cut off, the proportion between the amount of steam admitted to the pump and the pressure in the press not being preserved; and my invention is not limited in its application to an oil-press in the manner above described, but is applicable to other purposes where it is desired that the pressure of the liquid in the press shall automatically regulate and control the admission of steam to the pump in alternately increased and diminished quantities, or vice versa. It is thus applicable as well where it is desired to increase and diminish or diminish and increase the supply of steam admitted to the pump a number of times in the course of the operation as where it is desired to first admit a full supply, then diminish it, and then gradually increase it until it is cut off, as above described in its application to an oil-press.

Having thus fully described my invention, I claim—

1. The herein-described process of extracting oil from oleaginous matter in a hydrostatic press with a steam-pump, consisting in first admitting a full supply of steam from the steam-pipe to the pump and rapidly forcing up the platen of the press to the point where oil begins to be expressed, then cutting off a portion of the supply of steam from the pump and holding the pressure at a substantially uniform and predetermined degree while the surplus oil is being most rapidly expressed, and then gradually increasing the amount of steam admitted to the pump until the maximum degree of pressure desired is reached, substantially as described.

2. The combination, with a hydrostatic press and a steam-pump, of a steam-valve interposed in the steam-supply pipe to the pump and operated upon by pressure of the liquid in the press and pump, said valve co-operating with valve-passages so arranged that the continued movement of the valve will regulate the supply of steam in alternately increased and diminished quantities, as desired, substantially as described.

3. The combination, with a hydrostatic press and a steam-pump, of a valve interposed in the steam-supply pipe to the pump and operated upon by pressure of the liquid in the press and pump, and a cut-off valve also operated upon by the aforesaid pressure, said valves co-operating with valve-passages so arranged that the continued movement of the valve will regulate the supply of steam in increased or diminished quantities and the cut-off valve will, when the pressure reaches the maximum, shut off the supply, substantially as described.

4. The combination, with a hydrostatic press and a steam-pump, of a valve interposed in the steam-supply pipe to the pump and operated upon by pressure of the liquid in the press and pump, a cut-off valve, and means, substantially as described, for adjusting the pressure at which said valves operate, the valves being so arranged relative to the valve-openings that the one admits steam in increased or diminished quantities, while the other cuts off the steam at any desired pressure, substantially as described.

5. The combination, with a hydrostatic press and a steam-pump, of a valve interposed in the steam-supply pipe to the pump, a piston connected with the valve and actuated by the pressure of the liquid in press and pump, and a device, such as a spring, for partially counteracting the pressure on the piston and regulating the pressure at which said piston is operated, the valve-passages controlled by the valve being so arranged as that the continued movement of the valve will regulate the supply of steam in alternately increased and diminished quantities, substantially as described.

6. The combination, with a hydrostatic press and a steam-pump, of a valve interposed in the main steam-pipe between the boiler and pump, a piston operated by the pressure in press and pump and connected with the said valve, a device, such as a spring, for partially counteracting the pressure of the liquid on the piston and determining the pressure at which it operates, and a steam cut-off valve also operated from said piston, said steam-valve and cut-off being so arranged relative to the valve-openings that their continued movement will regulate the supply of steam in increased or diminished quantities and at the end of movement the steam will be cut off by the cut-off valve, substantially as described.

7. The combination, with a hydrostatic press and a steam-pump, of an adjustable valve interposed in the main steam-pipe between the boiler and the steam-pump, a piston connected with the valve and operated by pressure of the liquid in press and pump, a device, such as a spring, for partially counteracting the pressure of the liquid on the piston and determining the pressure at which it operates the valve, and an adjustable cut-off valve also operated by the piston, said

steam and cut-off valves being so arranged relative to their ports that their continued movement under the influence of the piston will cause them to regulate the supply of steam to the pump in increased or diminished quantities and to cut it off when the maximum pressure is reached.

8. The combination, with a hydrostatic press and a steam-pump, of a valve interposed in the main steam-pipe between the boiler and pump, a piston connected to said valve and actuated by pressure of the liquid in press and pump, a device, such as a spring, for partially counteracting the pressure of the liquid on the piston and means for adjusting it to regulate the degree of pressure at which the piston is operated, and a cut-off valve operated from said piston, said valves and their ports being so arranged that the continued movement of the valve admits an increased or diminished quantity of steam to the pump and the steam-supply is cut off when the desired pressure is reached, substantially as described.

9. The combination, with a hydrostatic press and a steam-pump, of a valve interposed in the main steam-pipe between the boiler and the steam-pump, and a governor connected to said valve and operated by the pressure of the liquid in the press and pump, said valve-ports being so arranged that the continued movement of the valve admits steam to the pump in alternately increased and diminished quantities, as desired, substantially as described.

10. The combination, with a hydrostatic press and a steam-pump, of a valve interposed in the main steam-pipe between the boiler and steam-pump and a governor connected to said valve and operated by the pressure of the liquid in the press and pump, a cut-off valve connected to the governor, and said valves being arranged relative to their ports so that their continued movement will increase or diminish the steam-supply to the pump and finally cut it off entirely when the maximum pressure is reached, substantially as described.

11. The combination, with a hydrostatic press, a steam-pump, and a valve interposed in the main pipe between the boiler and pump and a cut-off valve in said pipe, of a governor and means for adjusting it connected to the valves and operated by the pressure of the liquid in the press and pump, said valve being so arranged relative to its ports as to admit steam in alternately increased and diminished quantities during the continuation of the movement, and whereby also the point at which the steam is cut off can be regulated as desired, substantially as described.

12. The combination, with a hydrostatic press and a steam-pump, of an adjustable valve interposed in the main steam-pipe between the boiler and pump and a governor connected to said valve and operated by the pressure of the liquid in the press and pump, an adjustable cut-off valve connected to and operated by the governor, said valve being so arranged relative to its ports as that the continued movement increases or diminishes the steam supply, as desired, and said cut-off valve arranged to cut off the supply when the maximum pressure is reached, substantially as described.

13. The combination, with a hydrostatic press, a steam-pump, and a valve interposed in the main steam-pipe between the boiler and steam-pump, of a governor connected to said valve and operated by the pressure of the liquid in the press and pump, said governor consisting of a plunger containing a chamber to receive the liquid under pressure from the press and pump, and a device applied to said plunger, such as a spring, for partially counteracting the pressure of the liquid, said valve being so arranged relative to its ports that its continued movement alternately increases and diminishes the supply of steam to the pump, as desired, substantially as described.

14. The combination, with a hydrostatic press, a steam-pump, and a valve interposed in the main steam-pipe between the boiler and the steam-pump, of a governor connected to said valve and operated by the pressure of the liquid in the press and pump, said governor consisting of a plunger containing a chamber to receive the liquid under pressure from the press and pump, a device, such as a spring, applied to said plunger for partially counteracting the pressure of the liquid on said plunger, and a cut-off valve located in the steam-supply of the pump, said first-mentioned valve being so arranged relative to its ports that its continued movement increases or diminishes the supply of steam to the pump, and the cut-off valve arranged so as to cut off the steam when the maximum pressure is reached, as set forth.

15. The combination, with a hydrostatic press, a steam-pump, and a valve interposed in the main steam-pipe between the boiler and the steam-pump, of a governor connected to said valve and operated by the pressure of the liquid in the press and pump, said governor consisting of a plunger containing a chamber to receive the liquid under pressure from the press and pump, and adjustable means applied to said plunger for partially counteracting the pressure of the liquid on said plunger, a cut-off valve located in the steam-pipe to the pump and operated from the governor, said first-mentioned valve being so arranged relative to its ports as to increase or diminish the supply of steam during its continued movement, and the cut-off valve will be operated when the extreme movement is reached, whereby the means applied to the plunger for partially counteracting the pressure of the liquid on said plunger can be adjusted to cause the steam to be automatically cut off at any predetermined degree of pressure desired.

16. The combination, with a hydrostatic

press and a steam-pump, of valve mechanism interposed in the main steam-pipe between the boiler and the steam-pump and actuated by the pressure of the liquid in the press and pump, said valve mechanism consisting of a valve-chamber containing a perforated steam-admitting valve and a cut-off valve, said valves being connected so as to operate together, substantially as and for the purpose described.

17. The combination, with a hydrostatic press and a steam-pump, of valve mechanism interposed in the main steam-pipe between the boiler and the steam-pump and actuated by the pressure of the liquid in the press and pump, said valve mechanism consisting of a valve-chamber containing a perforated steam-admitting valve and a cut-off valve, said valves being adjustably connected to each other and operating together, substantially as and for the purpose described.

18. The combination, with a hydrostatic press, a steam-pump, and a governor, substantially as described, of valve mechanism interposed in the main steam-pipe between the boiler and the steam-pump, said valve mechanism consisting of a valve-chamber containing a perforated steam-admitting valve and a cut-off valve, said valves being connected so as to operate together, as and for the purpose described.

19. The combination, with a hydrostatic press, a steam-pump, and a governor, substantially as described, of valve mechanism interposed in the main steam-pipe between the boiler and the steam-pump, said valve mechanism, consisting of a valve-chamber containing a perforated steam-admitting valve and a cut-off valve, said valves being adjustably connected to each other and operating together, as and for the purpose described.

20. The combination, with the cylinder N and steam-inlet O, of the hollow shell-valve S, provided with the perforation *k* and further perforations *l* and cut-off valve T, said steam-inlet O entering the cylinder between the valves, substantially as described.

21. The combination, with the cylinder N, of valves S and T confined therein, the main inlet O, opening into said cylinder between said valves, the supplemental inlet *i*, and adjustable plug C′, substantially as and for the purpose described.

22. The combination, with the cylinder N, of valves S and T arranged therein, the port P, and supplemental balancing-port *j*, extending from the port P and opening beneath the valve T, substantially as and for the purpose described.

23. The combination, with the valve-rod R, of uprights V V, plunger U, confined between said uprights, the stationary cross-head W, the movable cross-heads X Y, the latter of which is secured to the plunger, and the springs B′ and *g*, arranged between said cross-heads, substantially as and for the purpose set forth.

24. The combination, with the plunger U, of uprights V V, cross-heads W X Y, springs B′ *g*, adjusting-plugs *r* for regulating the tension of the springs *g*, and adjusting-nuts *p* for regulating the tension of the spring B′, substantially as described.

25. The combination, with the uprights V V, cross-heads W X Y, and springs B′ *g*, of a plunger U, provided with a lifting device or shoulder *h* to come in contact with and raise the cross-head X, substantially as described.

26. The combination, with the uprights V V, cross-heads W X Y, and springs B′ *g*, of a plunger U, having a recess in its lower end, into which is fitted a packed piston-plug Z, having communication with the liquid in the press and pump, substantially as and for the purpose described.

27. The combination, with a hydrostatic press and a steam-pump, of a valve-chamber interposed in the steam-supply pipe to the pump, a valve fitted in said chamber and actuated by the pressure of the liquid in the press and pump and provided with openings arranged to be gradually uncovered by the movement of the valve in its chamber to admit an increased quantity of steam to the pump as the pressure in the press increases, substantially as and for the purpose described.

28. The combination, with a hydrostatic press and a steam-pump, of a valve-chamber interposed in the steam-supply pipe to the pump, and a valve fitted in said chamber and actuated by the pressure of the liquid in the press and pump and provided with openings arranged to be gradually uncovered by the movement of the valve in its chamber to admit an increased quantity of steam to the pump as the pressure in the pump increases and to be finally closed by the continued movement of said valve in its chamber to cut off the supply of steam to the pump, substantially as and for the purpose set forth.

29. The combination, with a hydrostatic press and a steam-pump, of a valve-chamber interposed in the steam-supply pipe to the pump, and an endwise-moving valve fitted therein and actuated by the pressure of the liquid in the press and pump and provided with openings arranged to be gradually uncovered by the movement of the valve in its chamber to admit an increased quantity of steam to the pump as the pressure in the pump increases, substantially as and for the purpose described.

30. The combination, with a hydrostatic press and a steam-pump, of a valve-chamber interposed in the steam-supply pipe to the pump, and an endwise-moving valve fitted therein and actuated by the pressure of the liquid in the press and pump and provided with openings arranged to be gradually uncovered by the movement of the valve in its chamber to admit an increased quantity of steam to the

pump as the pressure in the press increases and to be finally closed by the continued movement of the valve to cut off the steam from the pump, substantially as and for the purpose described.

31. The combination, with a hydrostatic press and a steam-pump, of a valve-chamber interposed in the steam-supply pipe to the pump, an endwise-moving tubular valve fitted therein and provided with openings arranged to be gradually uncovered by the endwise movement of the valve to admit an increased quantity of steam to the pump and to be finally closed by the continued movement of the valve to cut off the supply of steam to the pump, a valve-rod connected to said valve and projecting outside the casing, a plunger actuated by the pressure of the liquid in the press and pump, a spring applied to said plunger for partially counteracting the pressure of the liquid on it, and a cross-arm connecting said plunger and the valve-rod of the valve, substantially as and for the purpose described.

32. The combination, with a hydrostatic press and a steam-pump, of the valve-chamber interposed in the steam-supply pipe to the pump, the endwise-moving valve therein for controlling the admission of steam to the pump, the plunger actuated by the pressure of the liquid in the press and pump, and the cross-arm connecting said valve and plunger, whereby as said plunger rises under the pressure it carries said valve with it, substantially as and for the purpose described.

33. The combination, with a hydrostatic press and a steam-pump, of the valve-chamber interposed in the steam-supply pipe to the pump, the tubular valve fitted therein and having end and intermediate bearings and suitable ports or openings, the rod connection of said valve, the plunger actuated by the pressure of the liquid in the press and pump and connected to the valve to cause the plunger and valve to move together, whereby as the pressure in the press and pump increases the supply of steam is increased and is finally cut off by the continued movement of the valve, substantially as described.

34. The combination, with a hydrostatic press and a steam-pump, of the valve-chamber interposed in the steam-supply pipe to the pump, the valve therein controlling the passage of steam, the valve-rod, and the plunger mounted beside and parallel with the valve-chamber and rigidly connected with the valve-rod, substantially as and for the purpose described.

JOHN H. VAILE.

Witnesses:
EDWARD W. RECTOR,
OTTO RICHTER.