March 25, 1969 M. H. BECKMAN ET AL 3,434,263

SHEAR LINK AND METHOD OF USING SAME

Filed July 19, 1965

Sheet 1 of 2

FIG.2.

FIG.1.

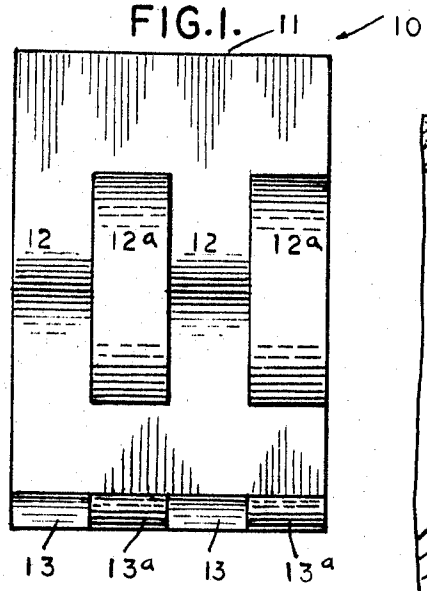

FIG.3.

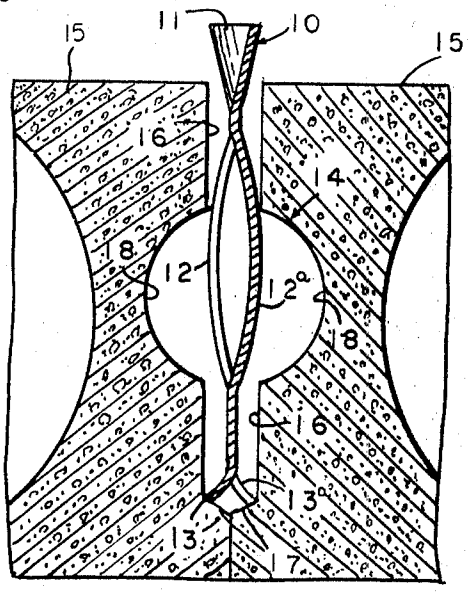

FIG. 4.

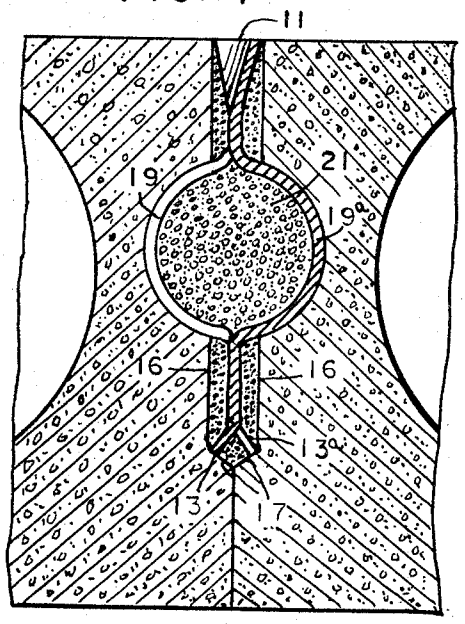

FIG. 5.

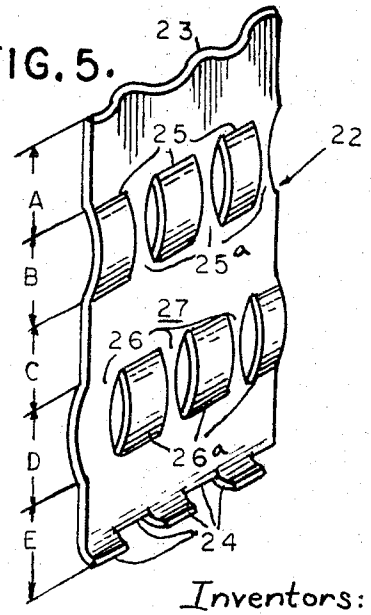

Inventors:
Melvin H. Beckman
Robert K. Unter
Samuel K. Wald

By Wilson & Geppert
Attorneys

FIG. 6.

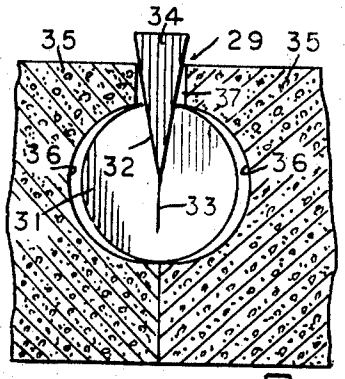

FIG. 7.

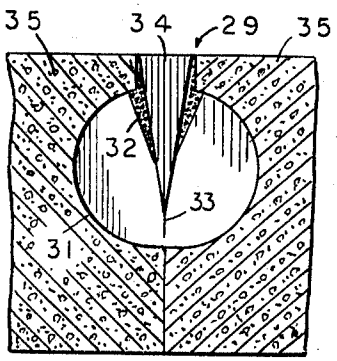

FIG. 8.

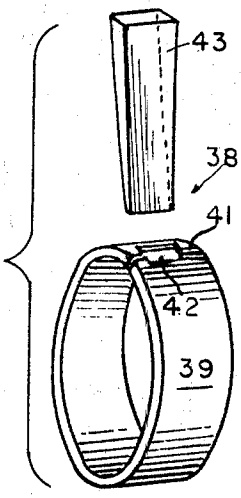

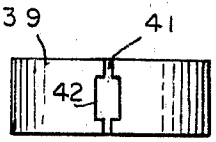

FIG. 9.

FIG. 10.

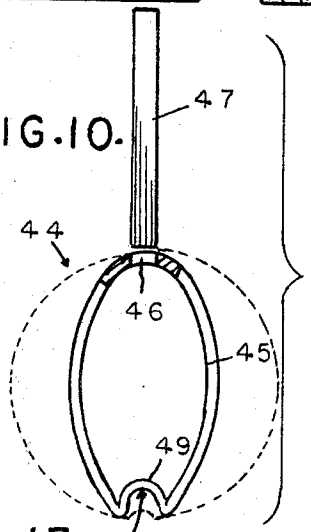

FIG. 11.

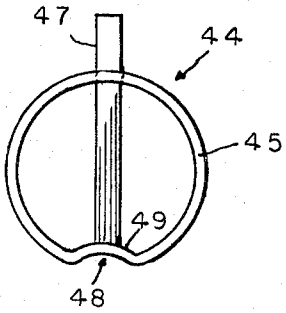

FIG. 13.

FIG. 14.

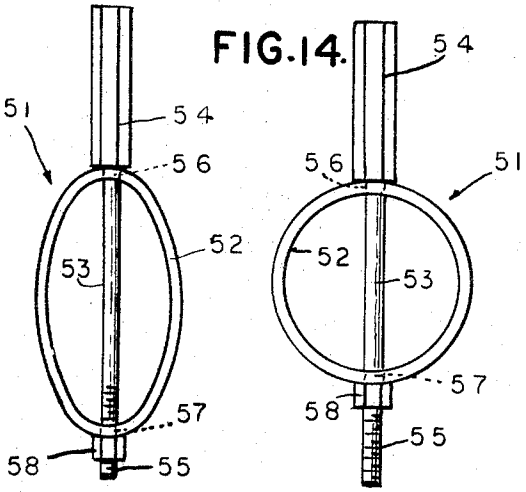

FIG. 12.

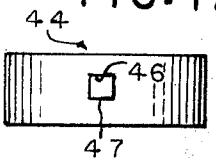

Inventors:
Melvin H. Beckman
Robert K. Unter
Samuel K. Wald
By Wilson & Geppert
Attorneys

United States Patent Office

3,434,263

Patented Mar. 25, 1969

1

3,434,263

SHEAR LINK AND METHOD OF USING SAME

Melvin H. Beckman, Rockford, Robert K. Unter, Roscoe, and Samuel K. Wald, Rockford, Ill., assignors to Keystone Consolidated Industries, Inc., a corporation of Delaware

Filed July 19, 1965, Ser. No. 472,798
Int. Cl. E04b *2/18, 1/38;* E04c *5/18*
U.S. Cl. 52—715 7 Claims

ABSTRACT OF THE DISCLOSURE

A shear link adapted to be positioned between adjoining precast concrete units and extended into recesses therein to aid in forming a grout key in the facing recesses providing resistance to shear stress, and a method for forming a grout key between such units including use of the shear link in the key. One form of link utilizes a metal plate having a rippled top edge, outwardly bent feet at the opposite edge and one or more rows of alternate oppositely bowed vertical bands which are expanded in the recess between the units. Another form of link utilizes a split disk having a wedge-shaped receptor space and split therefrom partially across the remainder of the disk; the receptor space receiving a wedge to expand the disk. Additional forms of link utilize a circular or deformed elliptical ring of metal which is expanded by a suitable wedge or tool to expand the ring. One form of ring is circular and has a split and opening cooperating with a wedge; another form of ring is elliptical with an opening at one edge and an inwardly bent portion opposite the opening, a plunger is inserted through the opening to abut the deformed portion and expand the ring; and a third form utilizes an elliptical ring having opposed openings receiving a threaded bolt having an enlarged head at one end and cooperating with a nut at the exterior of the opposite end of the ring.

The present invention relates to a shear link utilized to reinforce a joint occurring between two precast concrete units to add additional shear strength and reduce the shear stress normally supported by the cement grout in the joint.

A joint is formed between two abutting precast concrete units, such as slabs, panels, etc., and this joint is usually grouted to provide resistance to shear stress at the joint caused by uniform, intermittent or concentrated loading. The grout also seals the joint and will provide a generally smooth and uninterrupted surface. The present invention provides a reinforcing member in the joint and relieves the grout from absorbing all the stresses, especially the shear stresses, exerted thereon.

In precast concrete slab construction where rolling loads are applied, the shear link of the present invention will distribute the load to adjacent slabs without introducing fatigue into the grout key from intermittent loading. Also, where concentrated loads are applied to precast concrete slab construction, the shear link will distribute the loads to adjacent slabs over a large area without depending wholly on the grout key. In precast concrete panel construction, the shear link will act to distribute the loads to adjacent panels under wind loads and will also act under intermittent loads to distribute the load without introducing fatigue into the grout key.

Among the objects of the present invention is the provision of a shear link which is inserted into a joint between precast concrete units and expanded, and will act to add additional resistance to shear stress and substantially reduce, if not eliminate, the shear stress that is now resisted by the grout alone. The joint is also

2

grouted with the grout surrounding the shear link within the joint.

Another object of the present invention is the provision of a shear link so constructed and designed to fit the joint configuration of various manufacturers of precast concrete units. One such shear link includes outwardly bent feet, one or more key portions having alternate bands which bulge outwardly in opposite directions, and an undulated or rippled head portion. If more than one key portion is utilized, a spacer area is positioned between the key portions. The key portions bulge outwardly in opposite directions into complementary groove or channel portions formed in the edges of the concrete units forming the joint.

A further object of the present invention is the provision of an expansible shear link utilizing a split disk or ring. In either link, a wedge is inserted into the split portion of the disk or ring to expand the member outwardly and fit firmly into the key formed in the joint. The wedge forms a part of the link as expanded into the key.

The present invention also comprehends the provision of a shear link formed of an initially deformed ring which is inserted into the joint and then expanded to substantially its normal shape and configuration and fit firmly in the joint formed in the edges of the concrete units. One embodiment utilizes a ring having an inward curve in the surface so that the ring is deformed toward the long narrow shape of an ellipse. A plunger enters an opening in the ring opposite the curve and, when driven down, flattens the curve to outwardly expand the ring. Another embodiment utilizes a ring which has been deformed to the general shape of an ellipse and a bolt extends through the ring along its major axis and cooperates with a threaded opening in the ring or a separate nut to outwardly expand the ring toward the shape of a circle.

Further objects are to provide a construction of maximum simplicity, efficiency, economy and ease of assembly and operation, and such further objects, advantages and capabilities as will later more fully appear and are inherently possessed thereby.

In the drawings:

FIG. 1 is a front elevational view of one embodiment of a shear link of the present invention formed from a metal sheet.

FIG. 2 is a top plan view of the shear link of FIG. 1.

FIG. 3 is an end elevational view of the shear link initially inserted in the recesses formed in the edges of two abutting precast concrete units.

FIG. 4 is an end elevational view similar to FIG. 3 but with the link driven down and expanded to fit firmly in the recesses with grout added to the joint.

FIG. 5 is a perspective view of a second embodiment of shear link utilizing a pair of spaced key portions.

FIG. 6 is an end elevational view of a third embodiment of shear link in a joint in abutting concrete units where the link is a split disk provided with a cooperating wedge.

FIG. 7 is a view similar to FIG. 6 but with the wedge driven into the split disk to expand the disk.

FIG. 8 is a perspective view of a fourth embodiment of shear link utilizing a wedge and a split ring.

FIG. 9 is a top plan view of the split ring of FIG. 8 showing the opening for the wedge to spread the ring.

FIG. 10 is an elevational view of a fifth embodiment of shear link utilizing a deformed ring and a plunger.

FIG. 11 is a view similar to FIG. 10 but showing the ring in expanded relation by means of the inserted plunger.

FIG. 12 is a top plan view of the ring and plunger of FIG. 11.

FIG. 13 is an elevational view of another embodiment of shear link utilizing a deformed ring and a nut and bolt to expand the ring.

FIG. 14 is a view similar to FIG. 13 but with the ring in expanded condition.

Referring more particularly to the disclosure in the drawings, wherein are shown illustrative embodiments of the present invention, FIGS. 1, 2 and 3 disclose a shear link **10** formed of a metal sheet having a generally sinuous undulated or ripple top edge **11**, alternate oppositely bowed key portions or vertical bands **12** and **12**[a] and alternate oppositely outwardly bent feet **13** and **13**[a]. This link **10** can be formed in a stamping operation from a sheet of metal, preferably a low carbon steel.

The link **10** is inserted into a joint **14** formed in the edges of two abutting concrete units **15**; each unit having a generally flat recess **16** terminating at a lower wall **17** and intermediate its ends having a central generally semi-circular recess **18**. The complementary recesses **16** and **18** extend laterally along the edge of each concrete unit **15** for any desired length. The recesses **16, 16** of the two units **15, 15** form the joint **14** of sufficient width to receive the shear link **10** as shown in FIG. 3 with the feet **13** extending to and contacting the end walls **17, 17**. The link in its unexpanded condition is of such a height as to extend beyond the upper or outer edge of the concrete units **15** as shown in FIG. 3.

To deform the link, the link is driven inwardly or downwardly by means of a driving member impinging the exposed top or outer edge **11**. As the link is driven into the joint by a driving force on the top **11** and with the feet **13** abutting the ends **17**, the alternately bowed key portions **12** and **12**[a] are expanded outwardly into the recesses **18** until the expanded key portions or bands **19** and **19**[a] fit conformably in the joint. Then grout **21** is poured or otherwise inserted into the recesses **16, 16** and **18, 18** to fill these recesses and any spaces formed by the expanded or deformed shear link to reinforce the joint and forming a key between the abutting concrete units.

FIG. 5 discloses a second embodiment of the present invention in the form of a shear link **22** utilized for concrete units having a double key configuration. This shear link **22** is also provided with a sinuous, undulated or rippled top or outer edge **23** at one end and alternately outwardly bent feet **24** at the other end. For the double key, upper alternate bowed key portions or vertical bends **25** and **25**[a] and lower alternate bowed key portions or vertical bands **26** and **26**[a] are provided separated by a spacer portion **27**. The corresponding vertical bands in the bands **25, 25**[a] and **26, 26**[a] are oppositely bowed to provide greater stability to the link. The type of material forming the link, its thickness and its width, and the bearing produced on the bearing surfaces of the link determine the strength of the link.

The key dimensions B, D of the key portions **25, 25**[a] and **26, 26**[a] are determined by the length, depth and configuration of the product in which the link is used. The dimension C of the spacer portion **27** is determined by the space between the semi-circular recesses in the concrete units. The foot dimension E is determined by the depth of the flat recesses, while the head dimension A is determined by the depth of the recess in the products plus sufficient additional length to allow for proper deformation of the key portions **25, 25**[a] and **26, 26**[a], when the link is driven into place in the same manner as shown in FIGS. 3 and 4 with the top or outer edge **23** approximately even with the upper or outer surface of the adjoining concrete units. The feet of the shear link of the configuration of FIGS. 1 to 4 and the embodiment of FIG. 5 have the proper configuration to provide the required bearing when the link is driven into place and also to prevent the link from slipping through the joint while it is being deformed.

FIGS. 6 and 7 disclose a third embodiment of shear link **29** utilizing a split disk **31** having a wedge-shaped receptor space **32** and a split **33** extending from the apex of the space **32** partially across the remainder of the disk. A wedge **34** frictionally fits within the receptor space **32** so that the wedge and disk are held together during handling.

A pair of adjoining concrete units **35, 35** have recesses **36, 36** with a narrow entrance slot **37** formed between the units. With the disk **31** and wedge **34** frictionally held together, the link is inserted into the slot **37** with the flat generally parallel surfaces of the link parallel to the edges of the slot **37** and, when properly inserted, the link assembly is rotated 90° to the position shown in FIG. 6 where the link fits loosely in the recesses **36, 36**. Then the wedge **34** is driven into the disk **31** and into the split **33** causing the disk to expand and fit firmly in the recesses **36, 36** as clearly shown in FIG. 7 to accomplish the required shear resistance or load transfer between the units **35, 35**.

FIGS. 8 and 9 disclose a fourth embodiment of the present invention similar to the embodiment of FIGS. 6 and 7 except that the shear link **38** utilizes a split ring **39** rather than a split disk. The ring **39** has a split **41** thereacross and a central enlarged generally rectangular opening **42** in the split **41** to accommodate the wedge **43**. The insertion and deformation operation for the link **38** is the same as for the embodiment of FIGS. 6 and 7.

FIGS. 10 to 12 relate to another embodiment of a shear link **44** utilizing a deformed ring **45**. The ring is not necessarily split as in the previous embodiment but has been deformed to the general configuration of an ellipse having a square opening **46** to receive a plunger or rod **47** at one end of the major axis of the ellipse, and the ring is provided with an inwardly curved portion **48** at the opposite end of the major axis of the ellipse. The plunger **47** is partially inserted into the ring **45** through the opening **46**, and the ring is inserted into and rotated 90° in the recess formed by two adjoining concrete units as in the previous two embodiments. Once properly oriented, the plunger **47** is driven downwardly against the upper surface **49** of the curved portion **48** to flatten out the curved portion and thus expand the ring **45** into the recess as shown in FIGS. 11 and 12.

FIGS. 13 and 14 disclose a further embodiment of shear link **51** also utilizing a deformed ring **52**. The ring is deformed to the general shape of an ellipse which may directly be inserted into the recess in the joint in adjoining concrete units or may be inserted and rotated 90° as described in relation to the embodiment of FIGS. 6 and 7. An elongated bolt **53** having a longitudinally elongated driving head **54** and a threaded opposite end **55** is inserted into the ring **52** along the major axis of the elliptical shape through openings **56** and **57**. The opening **57** may be internally threaded to cooperate with the bolt **53** or a threaded nut **58** at the lower end of the ring may be utilized as shown in FIGS. 13 and 14. Once the ring is properly oriented in the recess, the bolt **53** is rotated to draw the nut and/or lower end of the ring having opening **57** toward the bolt head **54** to expand the ring to fit comformably in the recess by compression of the deformed ring. Here as in the previous embodiments utilizing a ring or disk, grout is added to the joint and fills in the spaces or voids in and around the shear link.

Having thus disclosed the invention, we claim:

1. A method of forming a grout key between adjoining concrete units comprising the steps of forming an externally opening slot in the facing edges of a pair of abutting concrete units forming a joint, forming a complementary enlarged rounded recess portion in the concrete units opening into and communicating with said slot, inserting an expansible member through the slot into the recess portion in the joint between the concrete units with said member loosely received in the recess portion in the joint and an upper portion of the member initially extending beyond the concrete units, driving the upper portion of the member into the slot to expand the member to

conformably fit in the enlarged rounded recess portion, and adding grout to the joint through the slot and into the recess portion to flow around and through the expanded member to form the grout key between the concrete units.

2. A shear link for use in a key in a joint between adjoining concrete units, comprising a generally flat member having a head portion formed with a sinuous outer edge of the member, a foot portion having alternate oppositely outturned feet, and at least one expansible portion therebetween, said head portion initially extending beyond the concrete units when the member is inserted into the joint and thereafter is driven inwardly into the joint to expand the expansible portion to fit firmly and conformably in the joint.

3. A shear link for use in a key in a joint between adjoining concrete units, comprising a generally flat member having a head portion, a foot portion and at least one expansible portion therebetween, said expansible portion being a row of alternate oppositely and outwardly bowed vertical bands formed in said member, said head portion initially extending beyond the concrete units when the member is inserted into the joint and thereafter is driven inwardly into the joint to expand the expansible portion to fit firmly and conformably in the joint.

4. A shear link as set forth in claim **3**, in which each of said feet is outturned in a direction opposite to the outward bowing of the vertical band vertically aligned with said foot.

5. A shear link for use in a key in a joint between adjoining concrete units, comprising a generally flat member having a head portion, a foot portion and an expansible portion therebetween including a pair of longitudinally spaced transverse rows of alternate oppositely outwardly bowed bands formed in the member, said head portion

initially extending beyond the concrete unit when the member is inserted into the joint and thereafter is driven inwardly into the joint to expand the expansible portion to fit firmly and conformably in the joint.

6. A shear link as set forth in claim **5**, in which the corresponding bands in the two spaced rows are oppositely bowed.

7. A shear link as set forth in claim **6**, in which each of said feet is outturned in a direction opposite to the outward bowing of the corresponding vertically aligned band of the adjacent row of bands.

References Cited

UNITED STATES PATENTS

2,502,267	3/1950	McPherson	85—23 X
641,067	1/1900	Blazo	52—438
1,567,713	12/1925	Corser et al.	85—79 X
2,073,665	3/1937	Welch	52—438
2,206,350	7/1940	Gerlach	52—438
3,088,178	5/1963	Propst	52—585 X
3,098,266	7/1963	Oehmig	52—93 X
3,175,652	3/1965	Brekell et al.	52—586 X
3,276,172	10/1966	Alvden	52—585 X

FOREIGN PATENTS

900,328	6/1945	France.
601,372	5/1948	Great Britain.
12,263	1901	Sweden.

FRANK L. ABBOTT, *Primary Examiner.*

P. C. FAW, JR., *Assistant Examiner.*

U.S. Cl. X.R.

52—586, 735, 744; 85—71