(12) UK Patent Application (19) GB (11) 2 201 873 (13) A

(43) Application published 14 Sep 1988

(21) Application No 8804701

(22) Date of filing 29 Feb 1988

(30) Priority data
(31) 3707547 (32) 10 Mar 1987 (33) DE

(71) Applicant
Bayer AG

(Incorporated in FR Germany)

5090 Leverkusen, Bayerwerk,
Federal Republic of Germany

(72) Inventors
Walter Simm
Dr Friedrich-Wilhelm Kremer
Dr Elmar Kersting

(74) Agent and/or Address for Service
Elkington and Fife
High Holborn House, 52/54 High Holborn,
London, WC1V 6SH

(51) INT CL⁴
A01C 15/00

(52) Domestic classification (Edition J):
A1D 3A5 3B2 3B4

(56) Documents cited
GB 1026908

(58) Field of search
A1D
Selected US specifications from IPC sub-class
A01C

(54) Process and apparatus for spraying plant protective solutions or dispersions

(57) The spreading out of the spray mist when plant protective solutions or dispersions are discharged is limited by the production of an electric barrier field between the high voltage electrodes (5) and the ground in the spraying zone, the field strength being adjusted to such a height at the high voltage electrodes that gas ions are formed there by corona discharge, the said gas ions partly flowing down to the ground and partly charging up the sprayed or atomized droplets. The charged droplets are then forced on to the plants or the ground in the treatment zone by means of Coulomb forces in the barrier field. The apparatus for carrying out the process consists of a field sprayer with spray nozzles (7) in which at least two high voltage electrodes (5) in the form of vertically arranged metal rods or metal tubes are provided laterally to the spray nozzles (7). The lower edge (6) of the metal rods (5) is a sharp edge so that corona discharge takes place there.

FIG. 1

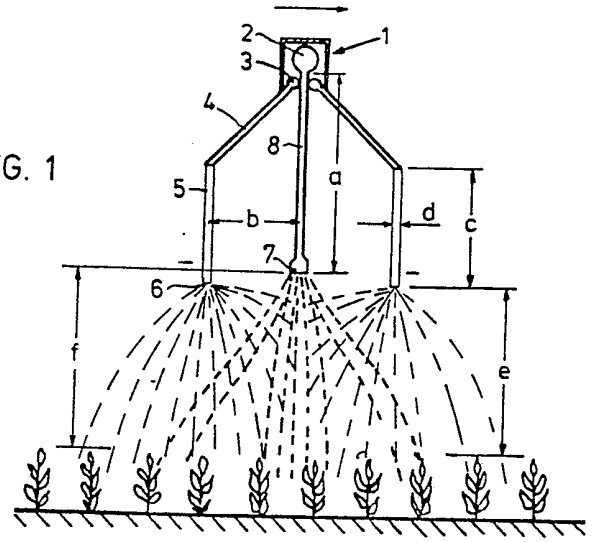

GB 2 201 873 A

FIG. 1

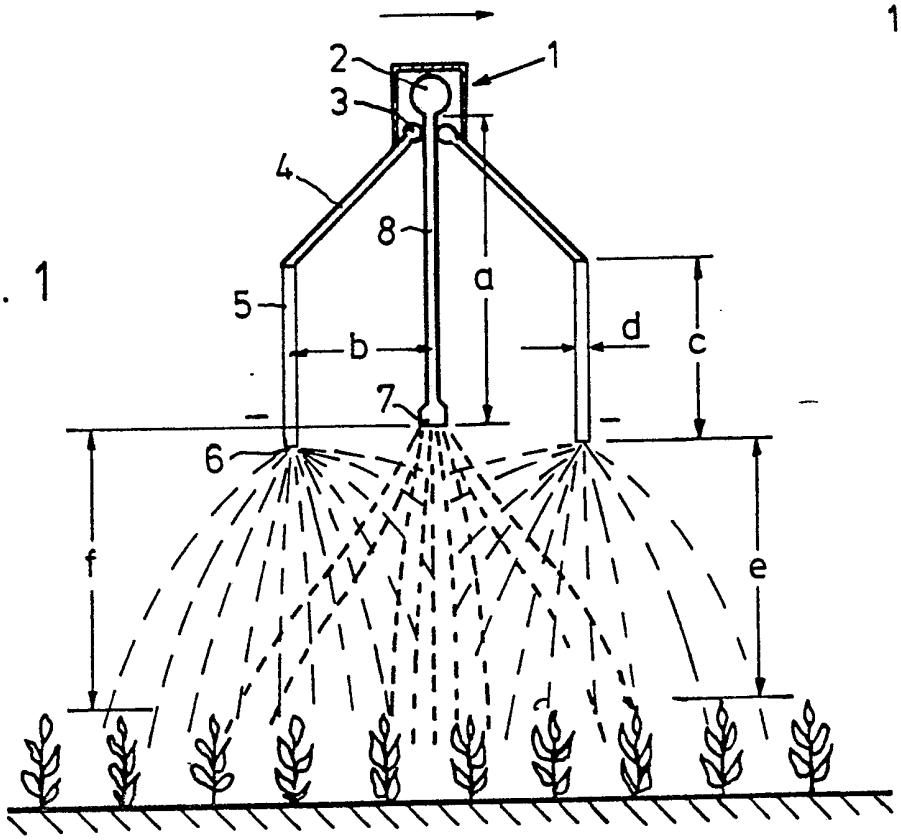

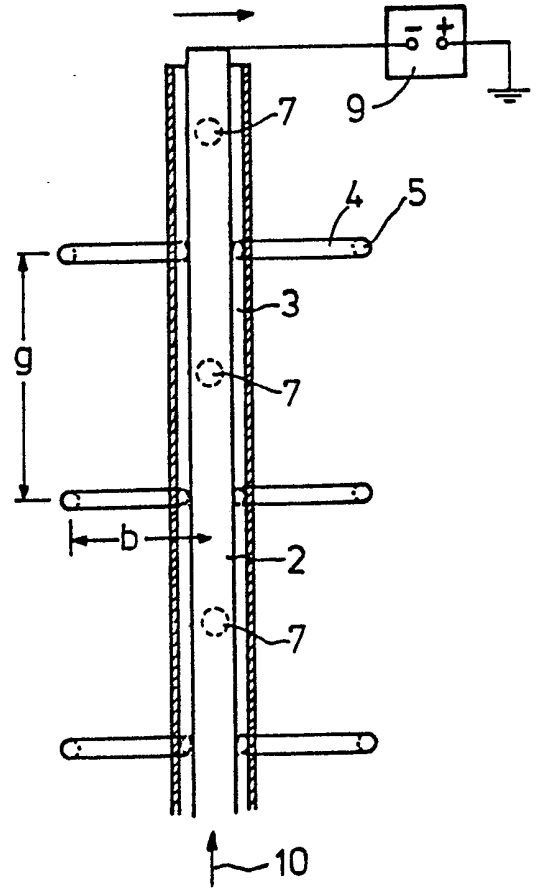

FIG. 2

Process and apparatus for spraying plant protective solutions or dispersions

This invention relates to a process and an apparatus for limiting the spread of spray mist when plant protective solutions or dispersions are sprayed from spray or atomizer nozzles.

It is known that when conventional mechanical atomizers operating under pressure are used for aqueous plant protective preparations, the effective amount of preparation deposited on the plants may be less than 25% of the amount discharged. The losses are mainly due to the fine droplets being carried away by the wind and the larger droplets falling to the ground.

There have therefore been attempts for some time now to achieve directed deposition of the plant protectives on all parts of the plant, especially also on the underside of the leaves and on the stems and stalks, by electrically charging the droplets.

Various methods of charging spray mist are known and it has been shown that a marked improvement in the deposition of droplets on the plant can in fact be achieved by charging and depositing the droplets in an electric field.

Effective electric deposition, however, requires the use of very fine droplets because the electrostatic forces have little influence on the movement of larger drops.

Another reason why the use of fine droplets is necessary is that while it is desirable for protection of the environment to reduce the quantity of active ingredient discharged into the environment, the required protective effect

should be preserved, which is only possible if the surfaces of the different parts of the plant are adequately covered with the protective agent.

When field sprayers are used at relatively great distancesbetween the nozzles and the carpet of plants, e.g. 0.5 m, an electrically charged spray mist is effectively deposited on the plant but there is the undesirable side effect that droplets of the same charge repel one another so that the charged cloud of mist spontaneously expands and a high proportion of the droplets is carried out of the region of the effective deposition area.

It was therefore an object of the present invention to develop a process for effectively discharging plant protectives by means of large apparatus whereby the advantages of electric deposition are preserved but the undesirable spread of the aerosol spray to the area surrounding the target region is prevented. At the same time, it is aimed that field sprayers already in use should be easily converted for electrical operation.

The most effective known method of charging conductive aqueous liquids, namely contact charging, cannot be used to solve this problem because in contact charging the nozzles are put under a high voltage and since the liquid is conductive, the storage container which is in electrical contact with the nozzles by leads would also assume the high voltage. Even if all the parts were perfectly insulated, this arrangement would be dangerous owing to the high electrical capacity of the system.

Another known method of charging droplets is that of corona charging with which the droplets can be charged directly on the spray nozzle by gas discharges produced by the corona electrodes even if the nozzle is at earth potential. The specific intensity of the charge on the droplets obtained by this method is generally less than that obtained by contact discharging. The electric deposition field acting on the carpet of plants is in this case also less than in contact charging when the nozzles

are under a voltage.

Both methods have the undesirable side effect inherent in large spray distances, namely expansion of the spray cloud by repulsion and the risk of loss by drifting.

A possibility has now been found for effectively reducing the spread of spray mist beyond the required region without at the same time impairing the preferential deposition on the plant.

According to the present invention the spread of spray mist produced when plant protectives are discharged by field sprayers is limited by the production of an electric barrier field in the spraying zone by means of electrodes which are under a high direct voltage, the barrier field extending from these electrodes to the ground and the field strength being adjusted to such a level at the high voltage electrodes that gas ions are formed at the electrodes by corona discharge, some of these gas ions flowing to the ground while others charge the sprayed or atomized droplets so that these droplets are forced on to the plants or the ground by Coulomb forces in the barrier field. The barrier field is thus built up between the electrodes and the ground by an arrangement of high voltage electrodes in the vicinity of the spray nozzles. Spray centres on the electrodes give rise to corona discharges which produce gas ions of both signs so that a current of ions flows between the electrodes and the ground. When liquid droplets from the inner spray zone enter this barrier region, they become electrically charged by the ions and are forced to the ground by Coulomb forces. At the same time, the charges on the droplets help to target the deposition of the droplets on the plants.

A high voltage of from 50 to 100 kV, preferably from 70 to 80 kV against earth is advantageously applied to the electrodes and an ionic current of from 30 µA to 70 µA, preferably from 40 µA to 50 µA is then produced per electrode by the corona discharge.

The distance b between the high voltage electrodes and the spray nozzles and the height e of the high voltage electrodes above the ground are generally so arranged that the ionic current flowing to earth is large compared with the current flowing to the spray nozzle.

The apparatus for carrying out the process according to the invention is based on a known field sprayer with spray nozzles for discharging solutions or dispersions of plant protective agents. It is characterised according to the invention in that at least two high voltage electrodes in the form of vertically arranged metal rods are provided laterally to each spray nozzle. The metal rods may be solid or hollow, i.e. tubes may be used instead of rods.

The lower part of the metal rod preferably ends in a sharp edge which forms a spraying zone for producing a corona discharge.

In one embodiment which has proved satisfactory in practice, the diameter of the metal rods is from 5 to 50 mm, preferably from 10 to 30 mm, and their length is from 100 to 500 mm, preferably from 200 to 300 mm.

The arrangement of the spray nozzles and high voltage electrodes at a relatively great distance from the supporting structure greatly reduces the shielding effect of the earthed structure on the high voltage electrodes. As a result, not only is a powerful deposition field built up over the carpet of plants but also the electrically charged spray mist is not deposited on the supporting structure itself. In this arrangement, therefore, the spray nozzles are not mounted in supporting beams as in conventional arrangements but are placed closer to the ground. On each side of a row of nozzles there is arranged a row of high voltage electrodes whose distance e from the ground is less than or equal to the distance f of the spray nozzles from the ground. This geometrical outlay contributes to the fact that the spray mist is not deposited on the metal rods.

As already mentioned, the distance b between the corona spraying points on the metal rods and the spraying nozzles is chosen so that the major portion of the field and of the ionic current is directed towards the ground and not towards the earthed spray nozzle.

Even if the distance b between the spray nozzles and the high voltage electrodes is less than the common distance e and f from the ground, by far the greater proportion of the electric field acts over the surface of the ground or of the carpet of plants since the ground, which acts as an electrode of large surface area, contributes far more to the electric field than the relatively small spray nozzles.

The invention will now be described in more detail with reference to the drawings, in which

Fig.1 is a sectional view through the supporting beam of a field sprayer with one nozzle and two high voltage electrodes, and

Fig.2 is a top plan view of the supporting beam showing the nozzles and the high voltage electrodes.

Fig.1 shows the supporting beam 1 (a component of the supporting structure of the field sprayer, which is not shown here), the distributor pipe 2 for the liquid to be sprayed and the feed cable 3 for the high voltage. The electric voltage is carried to the high voltage electrodes 5 by way of the cable connection 3 and a lead on or inside the insulated connecting rods 4. The electrodes 5 are arranged vertically and laterally to the supporting beam 1 (distance b). They consist of metal rods or metal tubes and have a circular, sharp spray edge 6 at their lower end. A spray nozzle 7 is arranged centrally between the two rods which form metal electrodes 5, i.e. vertically underneath the distributor pipe 2. This spray nozzle 7 communicates with the distributor pipe 2 by a connecting tube 8.

The spray nozzle 7 may be a conventional 2-material nozzle which is supplied with compressed air for spraying

the liquid. The optimum distance to which the electrodes 5 are adjusted depends on the operating height above the plant, the height of the operating voltage, the nature of the spray nozzles and the throughput of liquid.

A corona discharge is formed at the sharp spray edges 6 and results in ionization of the surrounding gaseous medium. This in turn gives rise to a distribution of ionic current along broken lines in Fig.1. The distribution of spray droplets from the spray nozzle is represented by the short broken lines.

The electric fields starting from the high voltage electrodes 5 on either side of the fan of spray from the nozzle 7 constitute barrier zones for the small droplets which are either produced at the nozzle 7 by the atomization process or formed by the impact of larger drops on the surface of the plants or of the ground. The barrier effect is produced by the accumulation, on the spray droplets, of the gas ions produced by the corona discharge so that the droplets become charged with the same polarity as the high voltage electrodes 5 and are subjected to a downwardly directed component of force in the barrier field.

Fig.2 shows the distribution of the spray nozzles 7 and of the high voltage electrodes 5. The supporting beam 1 has several joints or hinges which facilitate transport of the field sprayer, which is several metres in width (length of the supporting beam 1), by enabling the beam 1 to be folded up into a small space. With this requirement in view, the high voltage electrodes 5 are arranged in pairs on the two sides of the support 1 at a distance b, and in the longitudinal direction of the row of nozzles they are distributed in the zones between the nozzles in such a manner that when the beam is folded up they exactly fill up the gaps and will not be placed above one another. The distance g between two nozzles of the row is normally about 0.5 m. At least one pair of electrodes must then be provided

along this length of path.

The optimum geometrical dimensions of the apparatus are also determined by the fact that the spray mist should not be deposited on the high voltage electrodes 5. In addition, the electrodes 5 should be placed as low as possible so that they can produce a powerful field near the ground. The distance b between the high voltage electrodes 5 and the spray nozzles 7 and the height e of the high voltage electrodes are therefore chosen so that the ionic current flowing from the high voltage electrodes 5 to the ground is greater approximately by a factor of 10 than the ionic current flowing to the spray nozzle 7.

It has been found that the following guide lines concerning the dimensions and field strength satisfy these requirements. The distance b between the high voltage electrodes 5 and the supporting beam 1 may be from 0.1 m to 0.5 m and is preferably from 0.2 m to 0.3 m. The diameter d of the high voltage electrode 5 should be in the range of from 5 mm to 50 mm, preferably from 10 mm to 30 mm, and the length c of the rods 5 should be from 0.1 m to 0.5 m, preferably from 0.2 m to 0.3 m. The tubular spacer members 8 place the spray nozzles 7 at a distance a amounting to 0.3 to 0.6 m below the supporting beam 1. The spray nozzles 7 are arranged at the same height as the spray edges 6 of the high voltage electrodes 5 or at the most 30 mm (preferably 10 mm) above the level of the spray edges 6.

For operating the installation, the required high voltage of 50 to 100 kV, preferably 70 to 80 kV, may be obtained from a small high voltage generator 9 of the type known in the art. The electric installation of the tractor for the field sprayer is generally sufficient for supplying the energy to this generator. At an operating voltage of 70 kV, each electrode 5 produces an ionic current of from 40 to 50 μA.

The invention achieves the further advantage that the spray nozzles used may be designed for a much finer

atomization of liquid than has hitherto been possible. Owing to the barrier effect of the electric fields surrounding the high voltage electrodes, the discharge of liquid plant protective agents can be carried out in an environmentally more advantageous manner and with substantially less wastage.

CLAIMS:

1. A process for limiting the spread of spray mist when plant protective solutions or dispersions are discharged by spray nozzles or atomizer nozzles, wherein an electric barrier field is produced in the spraying zone between high voltage electrodes and ground in the spraying zone by means of these electrodes which are under a high direct voltage, and the field strength at the high voltage electrodes is adjusted to such a level that gas ions are formed in the vicinity of the electrodes by corona discharge, some of these gas ions flowing to the ground while others charge the sprayed or atomized droplets so that Coulomb forces in the barrier field push the droplets on to the plant or the soil to be treated.

2. A process according to claim 1, wherein a high voltage of from 50 to 100 kV against earth, preferably from 70 to 80 kV against earth is applied to the electrodes and an ionic current of from 30 to 70 µA, preferably from 40 to 50 µA is produced by the corona discharge at each electrode.

3. A process according to claims 1 to 2, wherein the distance between the high voltage electrodes and the spray nozzles and the height of the high voltage electrodes are chosen so that ionic current flowing to the ground is large compared with the current flowing to the spray nozzles.

4. An apparatus for carrying out the process according to claims 1 to 3, consisting of a field sprayer for plant protective solutions or dispersions which are sprayed from spray nozzles, wherein at least two high voltage electrodes in the form of vertically arranged metal rods (solid or hollow) are provided laterally

to the spray nozzles.

5. An apparatus according to claim 4, wherein the lower edge of the metal rods is a sharp edge to serve as spraying edge for a corona discharge.

6. An apparatus according to claims 4 to 5, wherein the diameter of the high voltage electrodes is from 5 mm to 50 mm, preferably from 10 mm to 30 mm.

7. An apparatus according to claims 4 to 6, wherein the length of the high voltage electrodes is from 0.1 m to 0.5 m, preferably from 0.2 m to 0.3 m.

8. An apparatus according to claims 4 to 7, wherein the spray nozzles are arranged at the same height as or slightly above the spraying edge of the high voltage electrodes.

9. A process for limiting the spread of spray mist when plant protective solutions or dispersions are sprayed from spray or atomizer nozzles substantially as herein described with reference to Figs. 1 and 2.

10. An apparatus for limiting the spread of spray mist when plant protective solutions or dispersions are sprayed from spray or atomizer nozzles substantially as herein described and as illustrated in Figs. 1 and 2.

Published 1988 at The Patent Office, State House, 66/71 High Holborn, London WC1R 4TP. Further copies may be obtained from The Patent Office, Sales Branch, St Mary Cray, Orpington, Kent BR5 3RD. Printed by Multiplex techniques ltd, St Mary Cray, Kent. Con. 1/87.