US00D405889S

United States Patent [19]

Parsons

[11] **Patent Number: Des. 405,889**

[45] **Date of Patent: **Feb. 16, 1999**

[54] **PILL CRUSHER APPARATUS**

[75] Inventor: **J. Stuart Parsons**, Laguna Nigel, Calif.

[73] Assignee: **Links Medical Products Inc.**, Aliso Viejo, Calif.

[**] Term: **14 Years**

[21] Appl. No.: **90,655**

[22] Filed: **Jul. 14, 1998**

[51] **LOC (6) Cl.** **24-02**

[52] **U.S. Cl.** **D24/220**

[58] **Field of Search** D24/220, 133; 241/DIG. 27, 169, 169.2, 262, 168, 100

[56] **References Cited**

U.S. PATENT DOCUMENTS

D. 196,726 10/1963 Bull D24/220
D. 233,533 11/1974 Ocel et al. D24/220
3,915,393 10/1975 Elkins 241/DIG. 27
4,763,847 8/1988 Vosburgh 241/169

Primary Examiner—Louis S. Zarfas
Assistant Examiner—G. Andoll
Attorney, Agent, or Firm—William Patrick Waters

[57] **CLAIM**

The ornamental design for a pill crusher apparatus, as shown.

DESCRIPTION

FIG. **1** is a left side perspective view of a pill crusher apparatus showing my design;
FIG. **2** is a top plan view thereof;
FIG. **3** is a bottom plan view thereof;
FIG. **4** is a right side elevational view thereof;
FIG. **5** is a left side elevational view thereof;
FIG. **6** is a front elevational view thereof; and,
FIG. **7** is a rear side elevational view thereof.

1 Claim, 2 Drawing Sheets

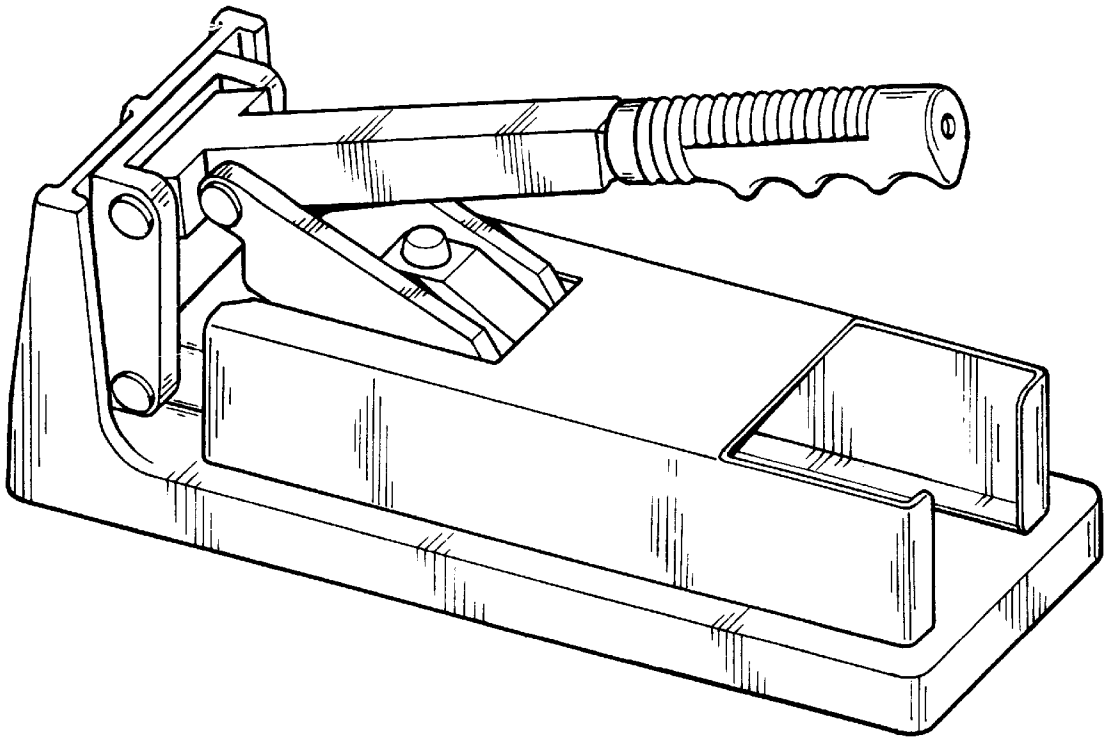

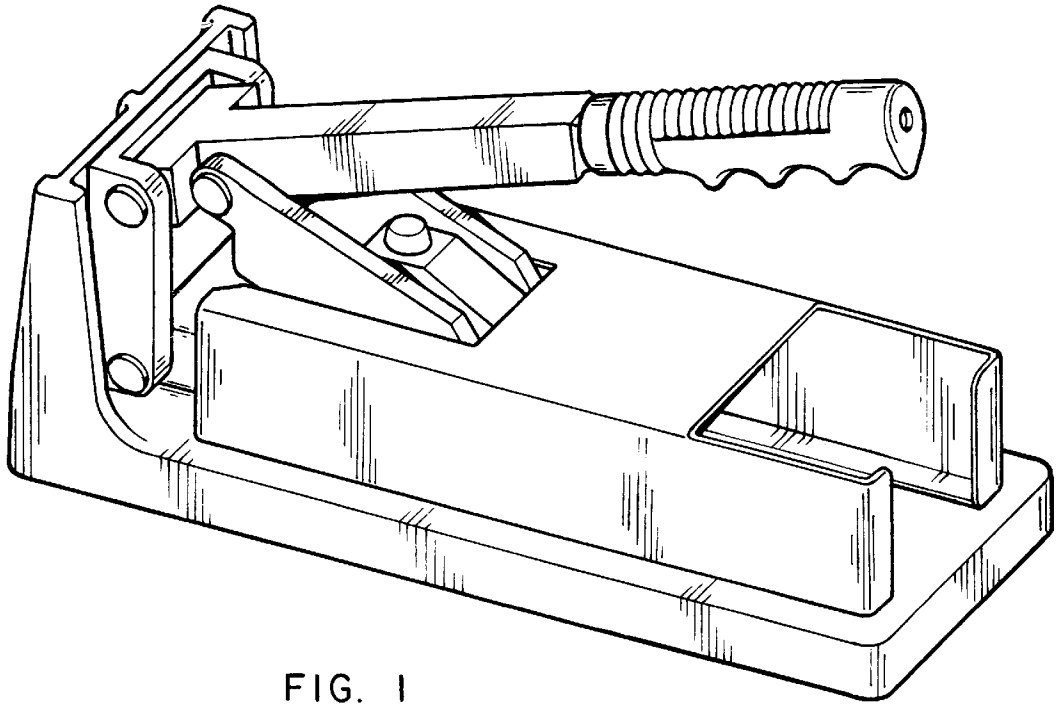

FIG. 1

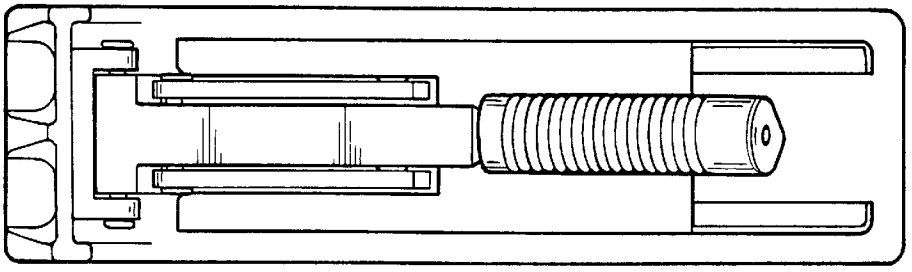

FIG. 2

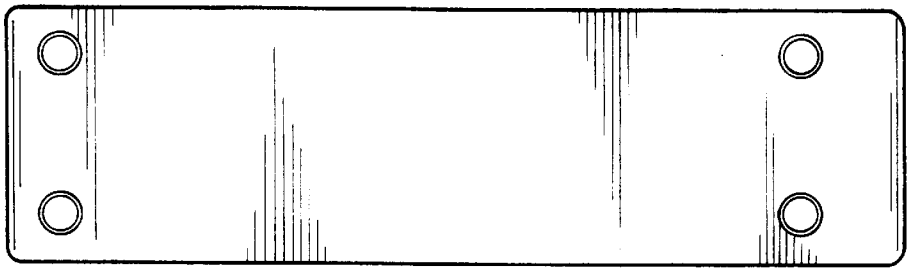

FIG. 3

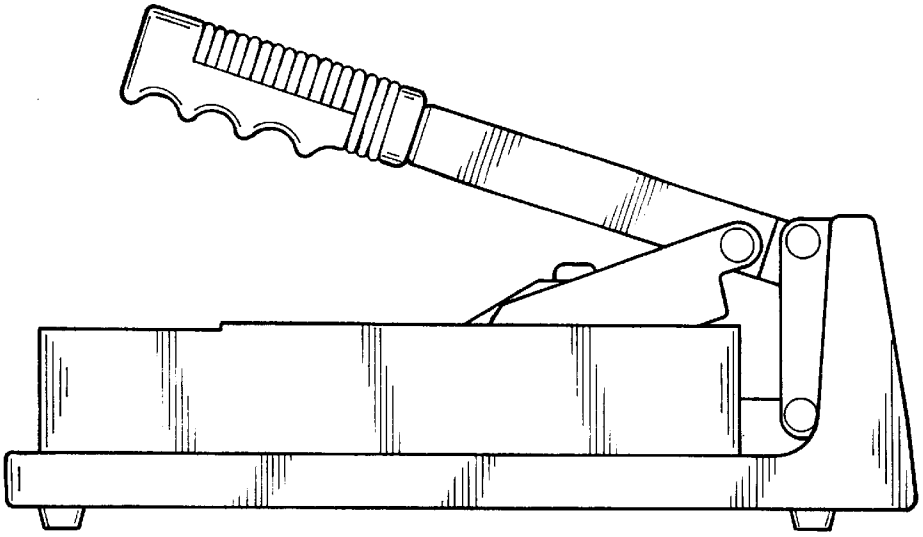

FIG. 4

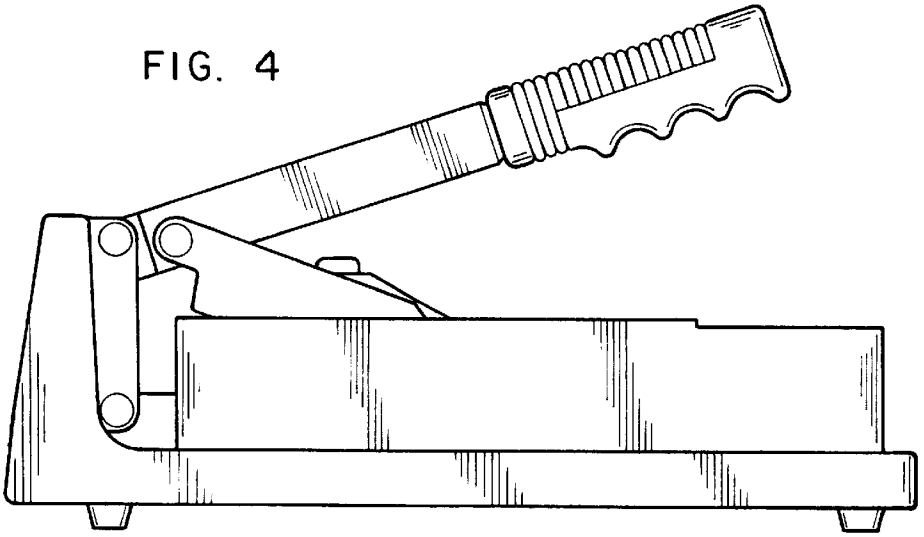

FIG. 5

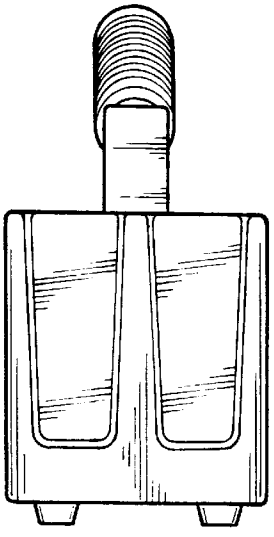

FIG. 6

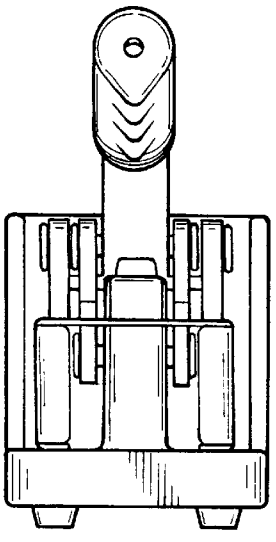

FIG. 7