Jan. 24, 1961 L. H. MORIN 2,968,908

TRAVELER WITH FACING SHELL OF WEAR RESISTANT MATERIAL

Filed July 23, 1959

FIG. 1.

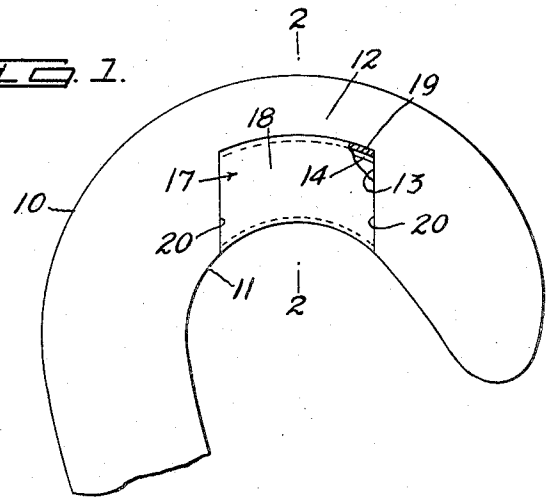

FIG. 2.

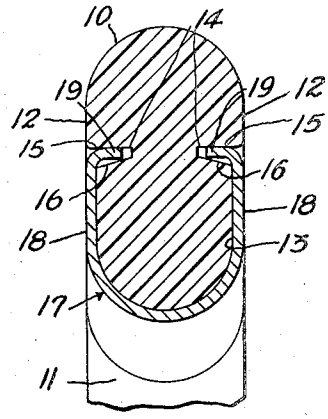

FIG. 3.

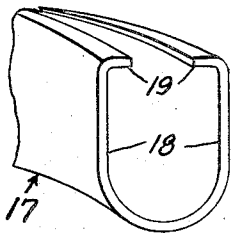

FIG. 4.

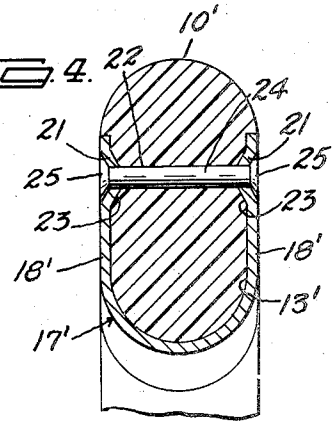

FIG. 5.

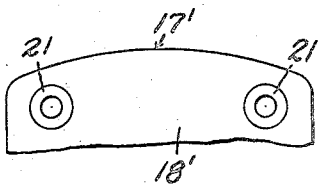

INVENTOR.
LOUIS H. MORIN
BY
Howard L. Thompson
ATTORNEY

United States Patent Office

2,968,908

Patented Jan. 24, 1961

1

2,968,908

TRAVELER WITH FACING SHELL OF WEAR RESISTANT MATERIAL

Louis H. Morin, Bronx, N.Y., assignor to Coats & Clark Inc., New York, N.Y., a corporation of Delaware

Filed July 23, 1959, Ser. No. 828,990

10 Claims. (Cl. 57—125)

This invention relates to travelers formed from molded plastic material employing on the undersurface of the large hook end portion of the traveler a facing shell of wear resistant material. More particularly, the invention deals with a structure of the character described, wherein the traveler is formed with a recess of predetermined cross-sectional contour on the undersurface of the large hook end of the traveler, into which recess the wear shell, element or member is snugly arranged.

Still further, the invention deals with a structure of the character described, wherein means is provided for retaining the shell against displacement from the recessed portion of the traveler.

The novel features of the invention will be best understood from the following description, when taken together with the accompanying drawing, in which certain embodiments of the invention are disclosed and, in which, the separate parts are designated by suitable reference characters in each of the views and, in which:

Fig. 1 is a side view of a part of the large hook end portion of a traveler on an enlarged scale and illustrating one of my improved wear resistant shells thereon, with part of the construction broken away and in section.

Fig. 2 is an enlarged section on the line 2—2 of Fig. 1.

Fig. 3 is a diagrammatic perspective view of one end portion of a wear resistant shell detached.

Fig. 4 is a view, similar to Fig. 2, showing a modification; and

Fig. 5 is an outside view of the upper end portion of one wall of the shell shown in Fig. 4, detached.

In view of the fact that travelers are generally known in the art, to simplify the illustration in the accompanying drawing, the large hook end portion **10** only of the traveler is shown. The traveler is molded from suitable plastic material such, for example, as nylon and, in the molding operation, a recess is formed on the inner surface **11** and side surfaces **12**, as clearly shown at **13** in Fig. 2 of the drawing. The recess **13**, arranged in the side walls **12**, terminates at upper ends in inwardly extending grooves or indentures **14**, having surfaces **15** arranged at right angles to the sides **12** and surfaces **16** arranged at an angle thereto, thus fashioning the grooves **14** to substantially triangular cross-sectional contour.

At **17** is illustrated one of my improved wear resistant members or elements in the form of a substantially U-shaped shell, the thickness of which corresponds to the depth of the recess **13**, so that, when the shell **17** is in operative position, as shown in Fig. 2 of the drawing, outer surfaces of the shell will be flush with the surface **11**, as well as the side surfaces **12**.

The ends of the side walls **18** of the shell **17** terminate in inwardly extending flanges **19** which are adapted to enter the grooves **14**, as clearly noted in Fig. 2 of the drawing. It will also appear, from a consideration of Fig. 1 of the drawing, that the ends of the shell **17** fit snugly within the walls **20** of the recess **13**, thus definitely positioning the shell **17** on the hook end portion.

2

The member, element or shell **17** can be composed of any suitable wear resistant metal and, with the structure shown in Figs. 1 to 3, inclusive, it is preferred that the metal will have spring properties, so as to enable the side walls **18** to be flexed apart in mounting the shell in the recess **13**. The shell will be so tensioned as to urge the walls **18** firmly upon the walls of the recess **13**, with the flanges **19** fitting freely, but snugly, in the grooves **14**. When assembled, it will appear that the shell is fixedly retained against movement and/or displacement from the hook end **10**. However, if desired, the shell can be forcibly removed for replacement.

In Figs. 4 and 5 of the drawing, I have shown a modified form of construction, wherein the shell **17'** or the side walls **18'** thereof, instead of terminating in the flanges **19**, include, adjacent their free ends and at corner portions thereof, indentures, countersunk sections or areas **21**, note Fig. 5 of the drawing. With this construction, it will be apparent that the recess **13'** formed in the hook end **10'**, instead of terminating in the grooves **14**, will have two apertures formed therein, one of which is indicated at **22** in Fig. 4 of the drawing, and each of these apertures will terminate at the recessed sides of the traveler in bevelled wall portions **23** to accommodate the countersunk portions **21** of the shell **17'**, as clearly illustrated in Fig. 4 of the drawing.

With this construction, after the shell **17'** is positioned on the traveler in the recess **13'**, rivet pins are arranged in the apertures **22**, one of these pins being shown at **24** in Fig. 4 of the drawing, and the ends of the pins are headed-over, as seen at **25**, into the countersunk portions **21**, so as to maintain the heads flush with the outer surfaces of the walls **18'**.

With the structure shown in Figs. 4 and 5 of the drawing, the wear resistant member, element or shell **17'** can be formed of materials which do not necessarily have spring properties and are otherwise secured in position by the rivets employed, the shells being shaped to snugly fit in the recess **13'**.

With both forms of construction shown, it will be apparent that a minimum amount of the material of the traveler is removed for reception of the wear resistant element, thereby maintaining the desired strength in the hook end portion of the traveler.

It will also be apparent that the U-shaped casing aids in reinforcing the traveler and this is particularly true with the structure shown in Fig. 4 of the drawing, where the side walls of the shell are securely bound and held upon the sides of the traveler by the rivet pins employed.

It will be understood that the angular surfaces **16** of the grooves **14** aid in positioning the flanges **19** in the grooves **14** in assemblage of the shell **17** with the traveler.

Having fully described my invention, what I claim as new and desire to secure by Letters Patent is:

1. A molded plastic traveler having a large hook end portion and a recess on the inner surface and side walls of said large hook end portion, a U-shaped resilient element of wear resistant material fitting snugly within said recess, and interengaging means between said element and traveler for retaining the element against displacement from said traveler.

2. A molded plastic traveler having a large hook end portion and a recess on the inner surface and side walls of said large hook end portion, a metal U-shaped element of wear resistant material fitting snugly within said recess, interengaging means between said element and traveler for retaining the element against displacement from said traveler, and the thickness of said element throughout the major portion thereof being equal to the depth of the recess in the traveler to maintain outer surfaces of the element and traveler in common alinement.

3. A molded plastic traveler having a large hook end portion and a recess on the inner surface and side walls of said large hook end portion, a U-shaped element of wear resistant material fitting snugly within said recess, interengaging means between said element and traveler for retaining the element against displacement from said traveler, and the interengaging means of said element comprising inwardly extending flanges at ends of side walls of the element extending into grooves in said traveler.

4. A molded plastic traveler having a large hook end portion and a recess on the inner surface and side walls of said large hook end portion, a metal U-shaped resilient element of wear resistant material fitting snugly within said recess, interengaging means between said element and traveler for retaining the element against displacement from said traveler, and interengaging means of said element comprising indentures on side walls of the element engaging correspondingly formed portions in the traveler.

5. A molded plastic traveler having a large hook end portion and a recess on the inner surface and side walls of said large hook end portion, a U-shaped element of wear resistant material fitting snugly within said recess, interengaging means between said element and traveler for retaining the element against displacement from said traveler, interengaging means of said element comprising indentures on side walls of the element engaging correspondingly formed portions in the traveler, and rivets mounted in the traveler and having headed ends seating in the indentures of the side walls of said element.

6. A molded plastic traveler having a large hook end portion, said large hook end portion of which includes on the inner rounded surface of said hook end portion a recess extending onto side walls of the traveler, the walls of the recess including indentures, a thin walled wear resistant element fitting snugly in the recess of the traveler, and said element including inwardly extending portions arranged in said indentures in retaining the element against displacement from the traveler.

7. A molded plastic traveler having a large hook end portion, said large hook end portion of which includes on the inner rounded surface of said hook end portion a recess extending onto side walls of the traveler, the walls of the recess including indentures, a thin walled wear resistant element of metal fitting snugly in the recess of the traveler, said element including inwardly extending portions arranged in said indentures in retaining the element against displacement from the traveler, said indentures being in the form of grooves substantially triangular in cross-sectional form, and the portions of said element comprising flanges arranged in said grooves.

8. A molded plastic traveler having a large hook end portion, said large hook end portion of which includes on the inner rounded surface of said hook end portion a recess extending onto side walls of the traveler, the walls of the recess including indentures, a thin walled wear resistant element fitting snugly in the recess of the traveler, said element including inwardly extending portions arranged in said indentures in retaining the element against displacement from the traveler, and the portions of said element comprising countersinks extending into said indentures.

9. A molded plastic traveler having a large hook end portion, said large hook end portion of which includes on the inner rounded surface of said hook end portion a recess extending onto side walls of the traveler, the walls of the recess including indentures, a thin walled wear resistant element fitting snugly in the recess of the traveler, said element including inwardly extending portions arranged in said indentures in retaining the element against displacement from the traveler, the portions of said element comprising countersinks extending into said indentures, and rivets mounted in the traveler and including headed ends arranged in said countersinks.

10. A molded plastic traveler having a large hook end portion, said large hook end portion of which includes on the inner rounded surface of said hook end portion a recess extending onto side walls of the traveler, the walls of the recess including indentures, a thin walled wear resistant element of metal fitting snugly in the recess of the traveler, said element including inwardly extending portions arranged in said indentures in retaining the element against displacement from the traveler, said recess extending longitudinally of the inner curved surface of the traveler, and the terminal end of the recess on side walls of the traveler substantially conforming to the contour of said inner curved surface of the traveler.

References Cited in the file of this patent

UNITED STATES PATENTS

2,683,346 Pieper ---------- July 13, 1954