United States Patent [19]

Newton

[11] **Patent Number: Des. 298,604**

[45] **Date of Patent: ** Nov. 22, 1988**

[54] **BRACKET OR SIMILAR ARTICLE FOR ATTACHMENT BENEATH A SHELF**

[75] Inventor: **Brian L. Newton**, Woonstocket, R.I.

[73] Assignee: **Dart Industries Inc.**, Deerfield, Ill.

[**] Term: **14 Years**

[21] Appl. No.: **847,609**

[22] Filed: **Apr. 1, 1986**

[52] **U.S. Cl.** **D8/380**; D8/354; D34/40; D15/89; D7/37

[58] **Field of Search** D8/354, 363, 366, 380, D8/349, 399; 108/149; D15/81, 82, 90, 89; D7/37, 21; D34/40, 42, 43; 211/126

[56] **References Cited**

U.S. PATENT DOCUMENTS

D. 71,386	11/1926	Kugler	D8/354 X
D. 236,168	7/1975	Johnson	D7/37 X
D. 247,413	3/1978	Hamilton	D7/21 X
D. 250,875	1/1979	Lindblom	D8/354 X
D. 250,876	1/1979	Lindblom	D8/380 X
D. 255,097	5/1980	Carroll et al.	D34/40
D. 256,663	2/1980	Gilb	D8/366 X
D. 257,664	12/1980	McKee	D8/366 X
D. 260,600	7/1981	Taylor	D8/380 X
D. 264,682	6/1982	Van Doren	D8/354
D. 269,657	7/1983	Taylor	D34/40 X
D. 288,407	2/1987	St. Alban	D8/354
D. 292,516	10/1987	Wolff	D15/89
D. 294,788	3/1988	Canteneels et al.	D15/89 X
1,684,558	9/1928	Schwarz	62/382
1,687,581	10/1928	Murphy	24/84
1,800,846	4/1931	Slugel	D15/89 X
2,021,065	11/1935	Hurlburt	D15/89 X
2,614,703	10/1957	Molins et al.	211/114
2,717,505	9/1955	Andersson	D15/89 X
2,754,166	7/1956	Ohm	312/140.4
3,170,594	2/1965	Nascher	D34/40 X
4,049,357	9/1977	Hamisch	24/115 H
4,283,035	8/1981	Ojembarnena et al.	D8/363 X
4,441,583	4/1984	Vaught	182/150

Primary Examiner—Horace B. Fay

[57] **CLAIM**

The ornamental design for a bracket or similar article for attachment beneath a shelf, as shown and described.

DESCRIPTION

FIG. **1** is a front, top and right side perspective view of a bracket or similar article shelf;

FIG. **2** is a front, bottom and right side perspective view thereof;

FIG. **3** is a top plan view thereof;

FIG. **4** is a front elevational view thereof;

FIG. **5** is a side elevational view thereof, the side opposite being a mirror image;

FIG. **6** is a rear elevational view thereof;

FIG. **7** is a bottom plan view thereof;

FIG. **8** is a cross-sectional view thereof taken on line **8—8** of FIG. **3**; and

FIG. **9** is a cross-sectional view thereof taken on line **9—9** of FIG. **3**.

The side opposite from the shown in FIG. **5** is a duplicate thereof.

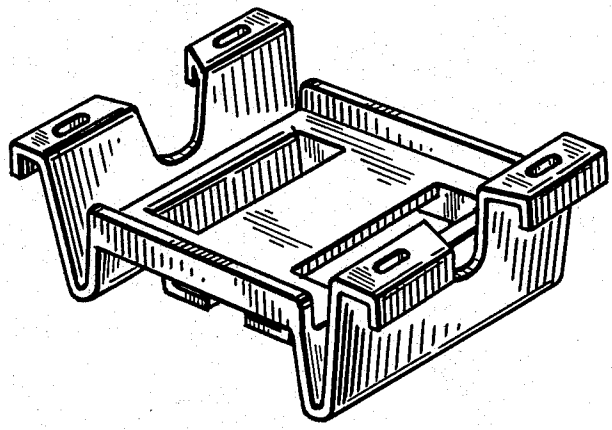

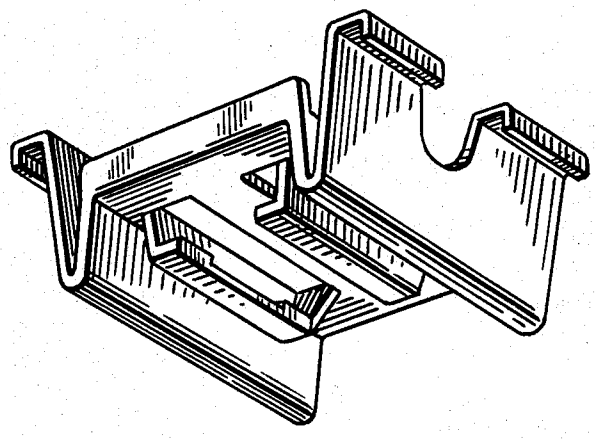

FIG. 1

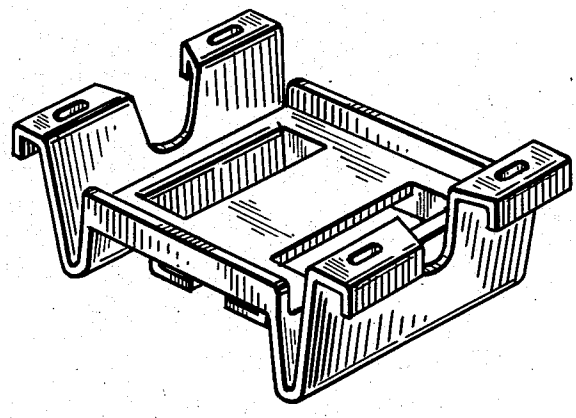

FIG. 3

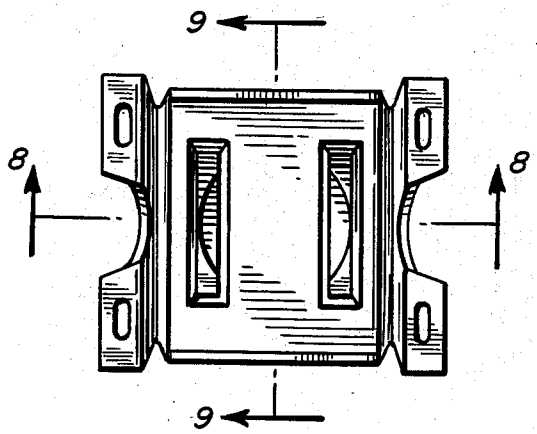

FIG. 5

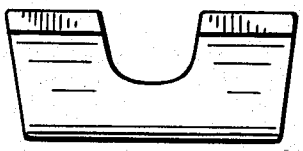

FIG. 4

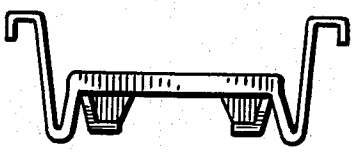

FIG. 6

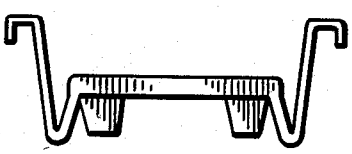

FIG. 2

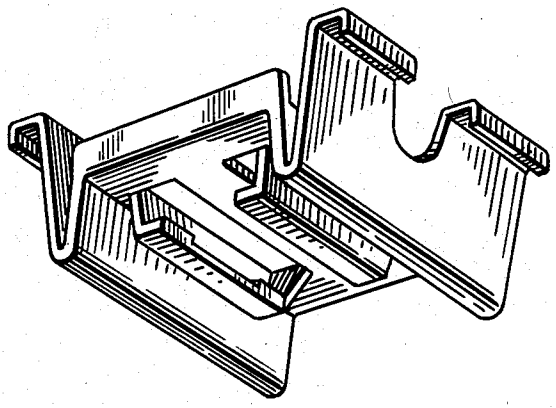

FIG. 7

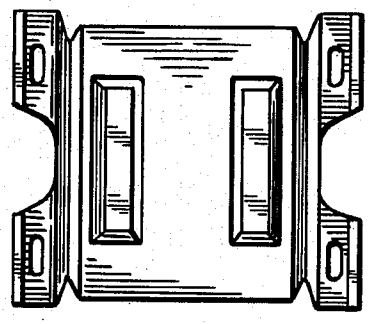

FIG. 8

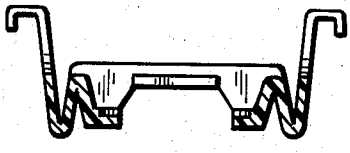

FIG. 9

