A. W. COPLEY.

ELECTRICAL RELAY.

APPLICATION FILED JULY 24, 1912.

1,135,438.

Patented Apr. 13, 1915.

2 SHEETS—SHEET 1.

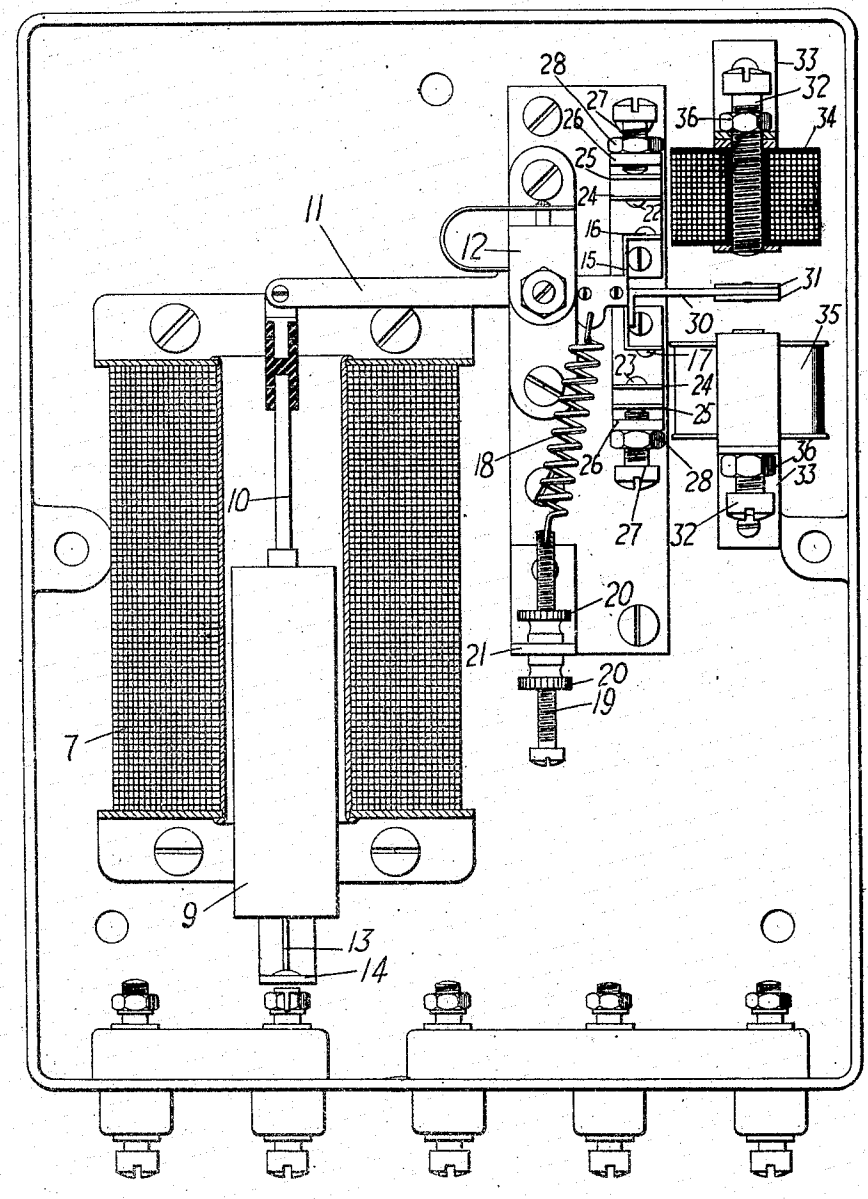

Fig. 1.

WITNESSES:

A. J. Ridge.

Otto S. Schairer.

INVENTOR

Almon W. Copley

BY

Wesley G. Carr

ATTORNEY

A. W. COPLEY.

ELECTRICAL RELAY.

APPLICATION FILED JULY 24, 1912.

1,135,438. **Patented Apr. 13, 1915.**

2 SHEETS—SHEET 2.

Fig. 2.

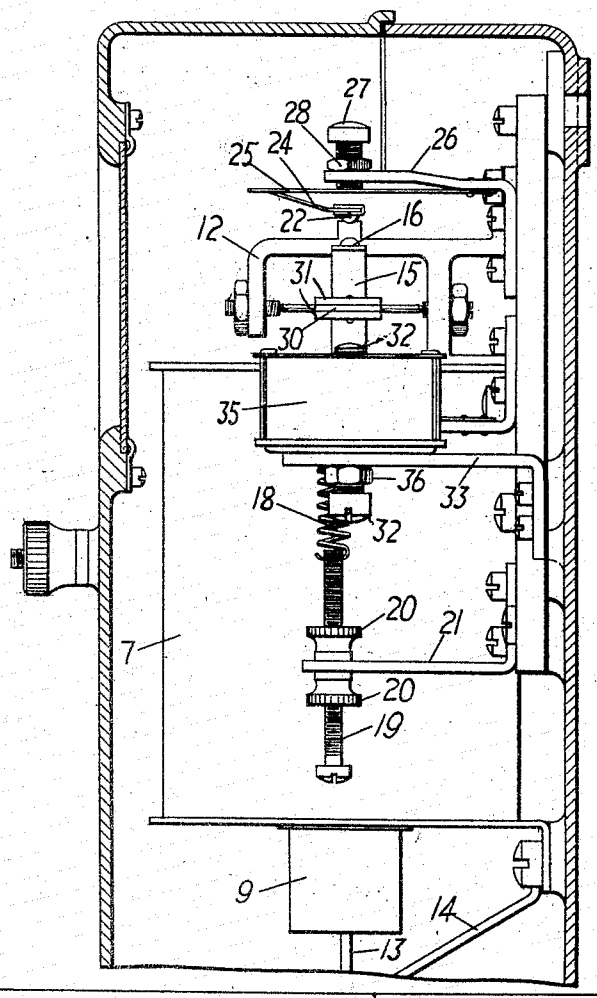

Fig. 3.

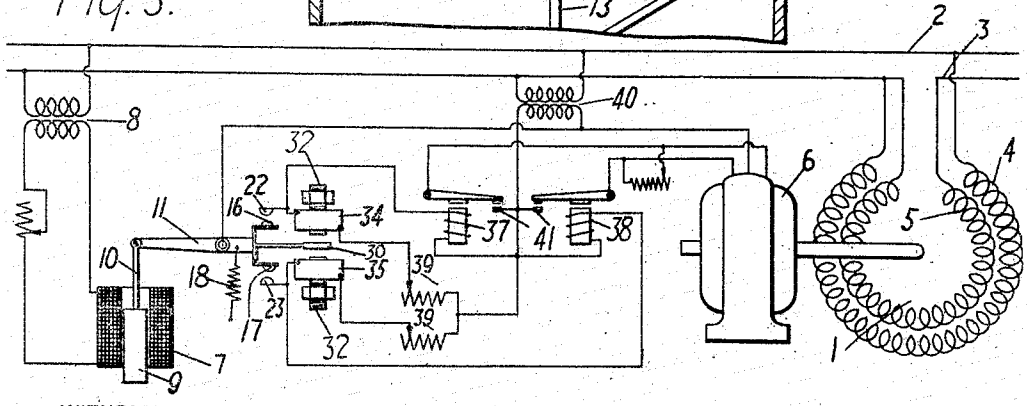

WITNESSES:

Otto S. Schairer

INVENTOR

Almon W. Copley

BY

Wesley G. Carr

ATTORNEY

UNITED STATES PATENT OFFICE.

ALMON W. COPLEY, OF WILKINSBURG, PENNSYLVANIA, ASSIGNOR TO WESTINGHOUSE ELECTRIC AND MANUFACTURING COMPANY, A CORPORATION OF PENNSYLVANIA.

ELECTRICAL RELAY.

1,135,438. Specification of Letters Patent. Patented Apr. 13, 1915.

Application filed July 24, 1912. Serial No. 711,203.

To all whom it may concern:

Be it known that I, ALMON W. COPLEY, a citizen of the United States, and a resident of Wilkinsburg, in the county of Allegheny and State of Pennsylvania, have invented a new and useful Improvement in Electrical Relays, of which the following is a specification.

My invention relates to electrical relays, and particularly to such as are employed in connection with devices for regulating the voltage or any other electrical quantity of an alternating current circuit.

The object of my invention is to provide a relay for use in connection with alternating current circuits in which the circuit controlling contact members will make positive engagement and disengagement and will be prevented from vibrating or chattering.

My invention is illustrated in the accompanying drawings, Figure 1 of which is a view, in front elevation, of a device constructed in accordance therewith, the cover being removed to expose the operating mechanism. Fig. 2 is a side and sectional view of the device of Fig. 1, and Fig. 3 illustrates diagrammatically the circuit connections of the device.

While the present device may be adapted to other uses, it is particularly useful, and is here shown as employed, in connection with a regulator 1 of the induction type for the voltage of a single phase alternating current circuit 2—3, the said regulator comprising relatively movable primary and secondary windings 4 and 5, the movable member of which is actuated by a motor 6. The function of the present relay is to control the operation of the motor 6 in accordance with variations of the voltage of the circuit 2—3 for the purpose of causing the regulator 1 to maintain the voltage of the said circuit substantially uniform. To this end, the relay comprises a main actuating coil or solenoid 7 that is connected either directly, or preferably, as here shown, through a transformer 8 to the conductors of the circuit 2—3, the degree of energization of the said solenoid accordingly varying with the voltage of the said circuit. The solenoid 7 is provided with a movable core 9 that is suspended, by means of a rod 10, from one end of a lever 11 that is fulcrumed in a bracket 12, the core 9 being guided in its movement by means of a rod 13 that extends downwardly from the lower end of the core and passes through an aperture in an arm 14. The other end of the lever 11 is provided with a bifurcated extension 15, the upper and lower faces of the divisions of which are provided with small rounded buttons 16 and 17 respectively constituting contact members. The extension 15 is also provided with an apertured ear to which is attached one end of a helical tension spring 18, the other end of which is attached to one end of a screw 19, whereby the tension of the spring 17 may be adjusted, the screw 19 being provided with nuts 20 that are located upon opposite sides of a stationary arm 21 and whereby the said adjustment may be effected and the parts locked in position after adjustment. The tension of the spring 18 is so adjusted as to almost balance the weight of the core 9 so that as the voltage impressed upon the coil 7 increases, the contact members 16 and 17 will be moved downwardly, and, as it decreases, they will be moved upwardly. Adjacent to the contact members 16 and 17 are similar stationary contact members 22 and 23 respectively that are carried by short springs 24, which, in turn, are mounted at the free ends of springs 25, the other ends of which are attached to stationary brackets 26. The brackets 26 are provided at their free ends with screws 27, the points of which bear upon the springs 25, the said screws being provided for the purpose of varying the distance between the stationary and movable contact members. Lock nuts 28 are provided for securing the screws 27 in their adjusted positions.

The end of the lever 11 opposite to the point of attachment thereto of the rod 10 is also provided with a resiliently mounted magnetizable extension 30 which carries insulating disks or plates 31 at its free end, the said extension constituting an armature for two electromagnets that are located adjacent thereto, and are disposed respectively upon opposite sides thereof, and the insulating disks serving to prevent grounding of the contact terminals 16 and 17. Each of the said electromagnets comprises a screw 32 constituting a core member, the said screws being threaded in stationary brackets 33 and being surrounded by coils 34 and 35, respectively. The screws 32 constitute core members for the coils 34 and 35 and are

adjustable longitudinally to vary the distances between them and the armature 30, lock nuts 36 being provided for securing them in their adjusted positions.

The stationary and movable contact members, by their engagement and disengagement, control the circuits of windings 37 and 38 of two secondary relays which, in turn, control the direction of rotation of the motor 6, the connections of the motor being preferably substantially as set forth in Patent #1,024,635. In addition to controlling the circuits of the windings 37 and 38, they also control the circuits of the coils 34 and 35 which are connected in shunt relation to the windings 37 and 38, with suitable resistances 39 in series therewith.

The current for energizing the windings 34, 37 and 38 and for the operation of the motor 6, may be derived from any suitable source, as, for instance, from the circuit 2—3, through a transformer 40, one terminal of which is connected to the lever 11 and to one terminal of the motor, and the other terminal of which is connected to terminals of the windings 34, 35, 37 and 38, and to the stationary contact terminals 41 of the secondary relays.

In the operation of the relay, the variations of the voltage of the circuit 2—3 cause the coil 7 to exert a varying pull upon the core 9 so that one or the other of the movable contact terminals 16 and 17 is caused to engage the corresponding opposite stationary contact terminal. If, for instance, the contact terminal 16 engages the terminal 22, the circuit of the corresponding secondary relay winding 37 is established, and, at the same time, the circuit of the corresponding electromagnet winding 34 is also established, with the result that the armature 30 is attracted in such a direction as to cause the contact members 16 and 22 to engage more positively and firmly. When the voltage of the circuit 2—3 changes sufficiently to cause the contact terminals 16 and 22 to disengage, the circuit of the winding 34 corresponding to the disengaged stationary contact members is interrupted, and because of the sudden cessation of the magnetic attraction upon the armature 30, the contact terminal 16 is caused to disengage the terminal 22 suddenly, and will be separated therefrom a material distance. The relay is, therefore, positive and effective in its action, and the contact terminals are prevented from chattering or vibrating into and out of engagement.

It will, of course, be understood that the invention may also be employed in connection with relays having only a single pair of contact members, and also with those adapted for use in connection with direct current circuits and for other purposes than that herein set forth.

I claim as my invention:

1. The combination with regulating means having controlling windings, of a relay comprising relatively movable contact members for controlling the circuits of the said windings, an armature resiliently connected to one of the contact members, means for actuating the contact members, electromagnets coöperating with said armature having windings the circuits of which are also controlled by the contact members, the latter windings being connected in parallel with the controlling windings for the regulating means.

2. The combination with regulating means having controlling windings, of a relay comprising relatively movable contact members for controlling the circuits of the said windings, an armature connected to one of the contact members, means for actuating the contact members, electromagnets coöperating with said armature having windings the circuits of which are also controlled by the contact members, the latter windings being connected in parallel with the controlling windings for the regulating means.

In testimony whereof, I have hereunto subscribed my name this 17th day of July 1912.

ALMON W. COPLEY.

Witnesses:
CLAYTON DILL,
B. B. HINES.