(19) Europäisches Patentamt
European Patent Office
Office européen des brevets

(11) **EP 3 020 289 A1**

(12) **EUROPEAN PATENT APPLICATION**
published in accordance with Art. 153(4) EPC

(43) Date of publication:
18.05.2016 Bulletin 2016/20

(21) Application number: **13889233.6**

(22) Date of filing: **11.07.2013**

(51) Int Cl.:
A24F 47/00 *(2006.01)*

(86) International application number:
PCT/CN2013/079246

(87) International publication number:
WO 2015/003373 (15.01.2015 Gazette 2015/02)

(84) Designated Contracting States:
AL AT BE BG CH CY CZ DE DK EE ES FI FR GB GR HR HU IE IS IT LI LT LU LV MC MK MT NL NO PL PT RO RS SE SI SK SM TR
Designated Extension States:
BA ME

(71) Applicant: **KIMREE HI-TECH INC.**
Road Town, Tortola (VG)

(72) Inventor: **LIU, Qiuming**
Shenzhen
Guangdong 518000 (CN)

(74) Representative: **Weickmann & Weickmann PartmbB**
Postfach 860 820
81635 München (DE)

(54) ELECTRONIC CIGARETTE VAPORIZER

(57) An electronic cigarette vaporizer, comprising a vaporizer body and a filter tip; the filter tip is a cylindrical flexible body located on the outside of one end of the vaporizer and arranged coaxially with the vaporizer; the vaporizer body and the peripheral surface of the flexible body are wrapped with a first sticker, by means of which the vaporizer body and the filter tip are tightly wrapped; the use of glue to adhesively bond the vaporizer body and the filter tip is no longer required, completely eliminating harm to the human body caused by glue; also, production of filter tips can be automated and user experience is improved. Furthermore, when the filter tip requires replacement, one need only tear off the first sticker; replacing the filter tip is convenient, and operation is both simple and convenient and cost-effective.

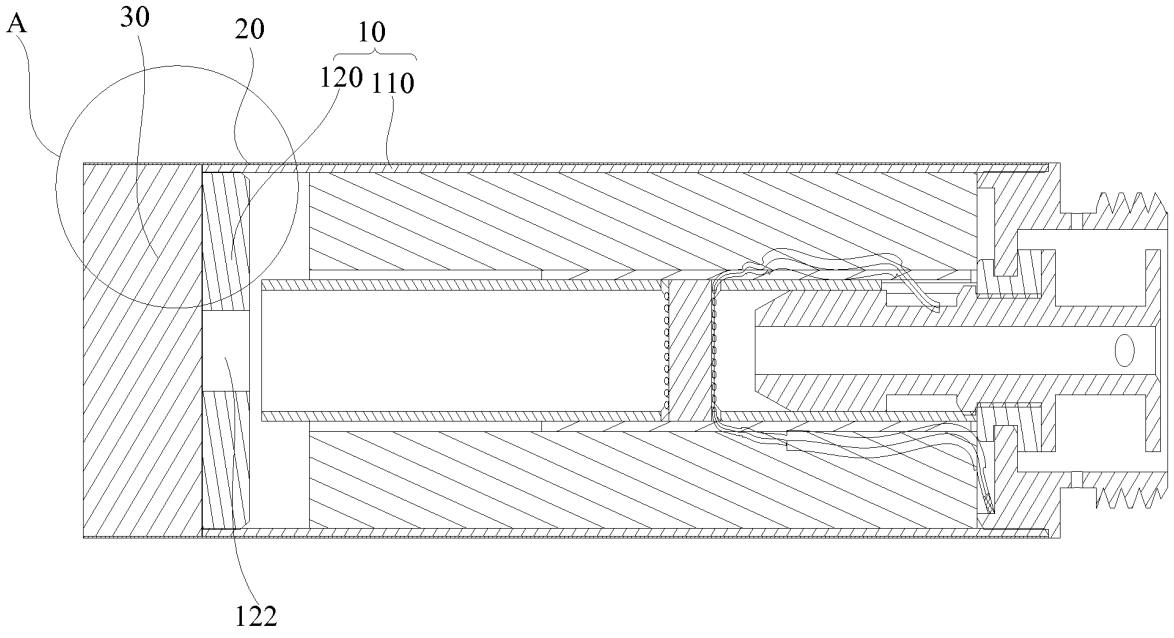

Fig. 1

EP 3 020 289 A1

Description

FIELD OF THE INVENTION

[0001] The present application relates to the field of cigarette substitutes, and more particularly relates to an electronic cigarette vaporizer.

BACKGROUND OF THE INVENTION

[0002] Due to the national anti-smoking propaganda and improvement of human's health-consciousness, the electronic cigarette is more and more widely used as a substitute to conventional cigarette. Generally, the electronic cigarette in the prior art consists of a vaporizer and a battery rod, a battery is arranged in the battery rod, and the vaporizer is electrically connected to the battery rod. An oil cup is arranged in the vaporizer to contain oil liquid. When the user smokes from a cigarette holder, a control circuit board in the battery rod senses the air flow, and then controls a heating device to vaporize the oil liquid to form smoke which is sucked via a suction nozzle cover.

[0003] In the prior, a filter is further arranged on the vaporizer. The smoke is filtered by the filter and then provided for user's suction. However, in the prior art, the filter is glued to the vaporizer through glues, and the filter and the vaporizer are fixed in an outer tube. However, glues always contain some compositions harmful to human body. Frequent contact or suction of these compositions will damage human body. Further, when smoking, human body contacts and holds the outer tube of the electronic cigarette to realize the suction, thus such structure makes the user feel that the cigarette holder is very hard, and lacks the soft feeling of the convention cigarette, which cause the user to generate mental resistance and render the smoking cessation ineffective. Furthermore, when the vaporizer in the prior art is assembled, the filter is aligned with the outer tube and then inputted into the outer tube, thus the assembly is inconvenient and does not benefit to mechanization.

SUMMARY OF THE INVENTION

[0004] Aiming at the defect that the filter and vaporizer in the prior art are glued by glues which are harmful to human body, the objective of the present application is to provide an electronic cigarette vaporizer which adopts a fixing process without glues, avoids the danger that the glues will harm the human body and improves user's experience.

[0005] The technical solutions of the present application for solving the technical problems are as follows:

An electronic cigarette vaporizer is provided, which comprises a vaporizer body and a filter tip; the filter tip is a cylindrical flexible body located on the outside of one end of the vaporizer body and arranged coaxially with the vaporizer body; and a first sticker is wrapped around peripheral surfaces of the vaporizer body and the cylindrical flexible body.

[0006] In the electronic cigarette vaporizer of the present invention, the vaporizer body and the filter tip are coplanar axially.

[0007] In the electronic cigarette vaporizer of the present invention, the vaporizer body comprises a vaporizer tube and a sealing element sleeved in the vaporizer tube, and ends of the sealing element and the vaporizer tube are directly abutted against the filter tip.

[0008] In the electronic cigarette vaporizer of the present invention, an outer diameter of the vaporizer tube is the same as a diameter of the filter tip.

[0009] In the electronic cigarette vaporizer of the present invention, a smoke vent hole is defined in the sealing element.

[0010] In the electronic cigarette vaporizer of the present invention, the first sticker is any one selected from fiber paper, craft paper, tipping paper and synthetic paper.

[0011] In the electronic cigarette vaporizer of the present invention, a thickness of the first sticker is ranged from 0.01 mm to 1 mm.

[0012] In the electronic cigarette vaporizer of the present invention, the filter tip is made of one or more material selected from chemical fiber, sponge and breathable foam.

[0013] In the electronic cigarette vaporizer of the present invention, an antiskid layer is coated outside the first sticker.

[0014] In the electronic cigarette vaporizer of the present invention, the first sticker comprises an inner surface and an outer surface, the inner surface is a smooth surface which is fitted well with outer surfaces of the vaporizer body and the filter tip, and the outer surface has a convex-concave pattern and/or a character.

[0015] In the electronic cigarette vaporizer of the present invention, a second sticker configured to shape the filter tip is covered outside the filter tip.

[0016] In the electronic cigarette vaporizer of the present invention, the second sticker is arranged between the filter tip and the first sticker.

[0017] In the electronic cigarette vaporizer of the present invention, a thickness of the second sticker is less than a thickness of the first sticker.

[0018] In the electronic cigarette vaporizer of the present invention, a thickness of the second sticker is ranged from 0.01 mm to 0.5 mm.

[0019] In the electronic cigarette vaporizer of the present invention, the second sticker is any one selected from fiber paper, craft paper, tipping paper and synthetic paper.

[0020] In the electronic cigarette vaporizer of the present invention, a total of a thickness of the second sticker and a diameter of the filter tip is equal to an outer diameter of the vaporizer tube.

[0021] In the electronic cigarette vaporizer of the

present invention, the second sticker is further covered on one end of the vaporizer body.

[0022] When implementing the electronic cigarette case of the present application, the following advantageous effects can be achieved: by wrapping the vaporizer body together with the filter tip via the first sticker, there is no need to glue the vaporizer body to the filter tip via glues, which completely avoids the glues harming human body and facilitates automatic production; further, the electronic cigarette vaporizer of the present invention provides a same feeling as convention cigarette when inputted into the mouth, satisfies the user's mental and physical requirements to improve the user's experience, and benefits to improve the effectiveness of smoking cessation. Furthermore, when it needs to replace the filter tip, it only needs to tear off the first sticker, which facilitates the replacement of the filter tip, thus the operation is easy and cost-save.

BRIEF DESCRIPTION OF THE DRAWINGS

[0023] The present application will be further described with reference to the accompanying drawings and embodiments in the following, in the accompanying drawings:

Fig. 1 is a cutaway view of an electronic cigarette vaporizer according to a first embodiment of the present invention;
Fig. 2 is an enlarged view of A part shown in Fig. 1;
Fig. 3 is a cutaway view of an electronic cigarette vaporizer according to a second embodiment of the present invention;
Fig. 4 is an enlarged view of B part shown in Fig. 3.

DETAILED DESCRIPTION OF THE PREFERRED EMBODIMENT

[0024] In order to make the technical features, objectives and effects of the present invention be understood more clearly, the specific implementation of the present invention will be illustrated in detail with the accompanying drawings.

[0025] As shown in Figs. 1 and 2, an electronic cigarette vaporizer provided according to a first embodiment of the present invention comprises a vaporizer body 10, a filter tip 30 and a first sticker 20. The vaporizer body 10 and the filter tip 30 are coaxially arranged and are coplanar axially. Ends of the vaporizer body 10 and the filter tip 30 are abutted against each other, and then the first sticker 20 is wrapped around the whole peripheral surfaces of the vaporizer body 10 and the filter tip 30.

[0026] The vaporizer body 10 comprises a vaporizer tube 110 and a sealing element 120, and the sealing element 120 is sleeved in the vaporizer tube 110. In this embodiment, ends of the vaporizer tube 110 and the sealing element 120 are both abutted against the filter tip 30, and an outer diameter of the vaporizer tube 110 is the same as a diameter of the filter tip 30. In this case, after the filter tip 30 is abutted against the vaporizer tube 110 and the sealing element 120, the outer diameter of the vaporizer tube 110 is equal to the diameter of the filter tip 30, and the vaporizer tube 110 and the filter tip 30 are coplanar. Thus, the first sticker 20 is allowable to closely wrap around outer surfaces of the filter tip 30 and the vaporizer tube 110 to make the vaporizer body 10 and the filter tip 30 be connected together. If the outer diameter of the vaporizer tube 110 is larger or less than the diameter of the filter tip 30, when using the first sticker 20 to wrap the vaporizer tube 110 and the filter tip 30, it will render the wrap un-tight, and may even appear that the filter 30 falls out or drop out from the sticker to negatively affect the user's experience.

[0027] A smoke vent hole 122 is defined in the sealing element 120, which is configured to enable vaporized smoke flow to filter tip 30 for user's suction. Understandably, the smoke vent hole 122 is a through hole defined in the sealing element 120, which may defined in a middle portion of the sealing element 120 or may defined in a position deviate from the middle portion. There is no limit to the number of the smoke vent hole 122.

[0028] The first sticker 20 comprises an inner surface (not shown) and an outer surface (not shown). The inner surface is a surface well fit to outer surfaces of the vaporizer body 10 and the filter tip 30. Specifically, the inner surface is a smooth surface which benefits to the well fitness to the vaporizer body 10 and the filter tip 30. The outer surface is exposed to the outside and is in sight of human' eyes, thus a convex-concave pattern and/or a character are defined on the outer surface. For example, identifications such as company logo, trade mark and so on can be printed on the outer surface, and characters for product introduction may also be printed on the outer surface.

[0029] The first sticker 20 is any one selected from fiber paper, craft paper, tipping paper and synthetic paper. Further, the first sticker 20 may also be plastic paper or ordinary writing paper, etc. In the present invention, the tipping paper is used as the first sticker 20. Furthermore, a thickness of the first sticker 20 is ranged from 0.01 mm to 1 mm. If the thickness of the first sticker 20 is too small, for example less than 0.01 mm, the vaporizer body 10 and the filter tip 30 may not be wrapped closely, which renders the connection between the vaporizer body 10 and the filter tip 30 infirm. If the thickness of the first sticker 20 is too large, for example larger than 1 mm, it lacks the feeling of conventional cigarette when the user uses since the first sticker 20 is too thick and hence negatively affects the user's experience. Preferably, the thickness of the first sticker 20 is 0.08 mm. In order to ensure the vaporizer body 10 and the filter tip 30 are wrapped more closely, multi layers of the first sticker 20 may be wrapped around the outer surfaces of the vaporizer body 10 and the filter tip 30. Namely, multi layers of the first sticker 20 may be wrapped around the electronic cigarette vaporizer of the present invention. The number of the layers

of the first sticker 20 may be set according to process requirements. Understandably, when multi layers of the first sticker 20 are wrapped, the multi layers of the first sticker 20 are arranged without gap.

[0030] In order to make it hard for the electronic cigarette vaporizer to fall out from the user's hand in wet environment or water environment, an antiskid layer (not shown) is coated outside the first sticker 20.

[0031] The filter tip 30 is a cylindrical flexible body which has a same feeling as the filter tip of the conventional cigarette, satisfies the user's mental and physical requirements to improve the user's experience, and benefits to improve the effectiveness of smoking cessation. The filter tip 30 not only functions for filtering but also functions as a suction nozzle. Specifically, the filter tip 30 is made of one or more material selected from chemical fiber, sponge and breathable foam. For example, the filter tip 30 may be made of chemical fiber, such as acetate fiber, polyester fiber, polyamide fiber and viscose fiber. Since a heating wire is arranged in the electronic cigarette vaporizer and the heating wire is twined around a glass fiber wick, a part of glass fiber of the glass fiber wick will get rid of the glass fiber wick when the heating wire heats to vaporize the tobacco liquid, and the suspension of the glass fiber is rendered under the carry of the air flow of the electronic cigarette vaporizer. By using the filter tip 30, the suspended particles such as glass fiber and other harmful gases can be filtered, which can ensure the smoke sucked by the user is harmless, reduce the harm of smoking to the user, and actually realize nontoxic smoking. The filter tip 30 made of chemical fiber, sponge and breathable foam is very similar to the cigarette holder of the conventional cigarette in senses of touch and vision, the feeling of using the present product is the same as that of smoking the conventional cigarette, and the user's experience is enhanced.

[0032] Through wrapping the vaporizer body 10 and the filter tip 30 with the first sticker 20 closely, the electronic cigarette vaporizer of the present invention does not need to use the glue to glue the vaporizer body 10 and the filter tip 30 together, completely avoids the glues harming human body and facilitates automatic production. Further, the electronic cigarette vaporizer of the present invention provides a same feeling as the convention cigarette when inputted into the mouth, satisfies the user's mental and physical requirements to improve the user's experience, and benefits to improve the effectiveness of smoking cessation. Furthermore, when it needs to replace the filter tip 30, it only needs to tear off the first sticker 20, which facilitates the replacement of the filter tip 30, thus the operation is easy and cost-save.

[0033] As shown in Figs. 3 and 4, an electronic cigarette vaporizer according to a second embodiment of the present invention is provided. The difference of the second embodiment to the first embodiment lies in that the electronic cigarette vaporizer further defines a second sticker 40 which is arranged between the filter tip 30 and the first sticker 20 and configured to wrap the filter tip 30, i.e. the second sticker 40 is configured to shape the filter tip 30.

[0034] Since the filter tip 30 is made of chemical fiber, sponge or breathable foam, the surface of the filter tip 30 is unsmooth. During the manufacturing process, the exteriors of some of the filter tips 30 are very rough or even uneven, thus the second sticker 40 is firstly wrapped outside the filter tip 30 in the present embodiment to shape the filter tip 30, then the first sticker 20 is wrapped outside the second sticker 40 and the vaporizer body 10, and hence forming a complete electronic cigarette vaporizer.

[0035] In order to make the filter tip 30 wrapped by the second sticker 40 and the vaporizer tube 110 coaxial and coplanar, a total of a thickness of the second sticker 40 and the diameter of the filter tip 30 is equal to the outer diameter of the vaporizer tube 110. In this case, when the first sticker 20 is attached, the first sticker 20 is closely attached to the outer surfaces of the second sticker 40 and the vaporizer body 10.

[0036] The second sticker 40 is also any one selected from fiber paper, craft paper, tipping paper and synthetic paper. Certainly, the second sticker 40 may also be plastic paper or ordinary writing paper, etc. Understandably, since the second sticker 40 is wrapped outside the filter tip 30 and configured to shape the filter tip 30, the second sticker 40 should use a litter thin sticker. The thickness of the second sticker 40 is less than that of the first sticker 20. Preferably, the thickness of the second sticker 40 is ranged from 0.01 mm to 0.5 mm and a preferred thickness of the second sticker 40 is 0.03 mm.

[0037] Understandably, the second sticker 40 may wrap one end of the vaporizer body 10. Namely, the second sticker 40 both wrap the vaporizer body 10 and the filter tip 30. In other words, outer surfaces of the vaporizer body 10 and the filter tip 30 is wrapped with two layers of stickers. Since the electronic cigarette vaporizer is very heavy, the filter tip can be better fixed by wrapping two layers of stickers to prevent the filter tip 30 from falling out. In other implementation, more layers, such as three layers, four layers or even more layers of stickers may wrap the filter tip 30 and the vaporizer body 10, which is not repeated here.

[0038] While the embodiments of the present application are described with reference to the accompanying drawings above, the present application is not limited to the above-mentioned specific implementations. In fact, the above-mentioned specific implementations are intended to be exemplary not to be limiting. In the inspiration of the present application, those ordinary skills in the art can also make many modifications without breaking away from the subject of the present application and the protection scope of the claims. All these modifications belong to the protection of the present application.

Claims

1. An electronic cigarette vaporizer, comprising a va-

porizer body (10) and a filter tip (30); wherein the filter tip (30) is a cylindrical flexible body located on the outside of one end of the vaporizer body (10) and arranged coaxially with the vaporizer body (10); and a first sticker (20) is wrapped around peripheral surfaces of the vaporizer body (10) and the cylindrical flexible body.

2. The electronic cigarette vaporizer according to claim 1, wherein the vaporizer body (10) and the filter tip (30) are coplanar axially.

3. The electronic cigarette vaporizer according to claim 1, wherein the vaporizer body (10) comprises a vaporizer tube (110) and a sealing element (120) sleeved in the vaporizer tube (110), and ends of the sealing element (120) and the vaporizer tube (110) are directly abutted against the filter tip (30).

4. The electronic cigarette vaporizer according to claim 3, wherein an outer diameter of the vaporizer tube (110) is the same as a diameter of the filter tip (30).

5. The electronic cigarette vaporizer according to claim 3, wherein a smoke vent hole (122) is defined in the sealing element (120).

6. The electronic cigarette vaporizer according to claim 1, wherein the first sticker (20) is any one selected from fiber paper, craft paper, tipping paper and synthetic paper.

7. The electronic cigarette vaporizer according to claim 1, wherein a thickness of the first sticker (20) is ranged from 0.01 mm to 1 mm.

8. The electronic cigarette vaporizer according to claim 1, wherein the filter tip (30) is made of one or more material selected from chemical fiber, sponge and breathable foam.

9. The electronic cigarette vaporizer according to claim 1, wherein an antiskid layer is coated outside the first sticker (20).

10. The electronic cigarette vaporizer according to claim 1, wherein the first sticker (20) comprises an inner surface and an outer surface, the inner surface is a smooth surface which is fitted well with outer surfaces of the vaporizer body (10) and the filter tip (30), and the outer surface has a convex-concave pattern and/or a character.

11. The electronic cigarette vaporizer according to claim 1, wherein a second sticker (40) configured to shape the filter tip (30) is covered outside the filter tip (30).

12. The electronic cigarette vaporizer according to claim 11, wherein the second sticker (40) is arranged between the filter tip (30) and the first sticker (20).

13. The electronic cigarette vaporizer according to claim 11, wherein a thickness of the second sticker (40) is less than a thickness of the first sticker (20).

14. The electronic cigarette vaporizer according to claim 11, wherein a thickness of the second sticker (40) is ranged from 0.01 mm to 0.5 mm.

15. The electronic cigarette vaporizer according to claim 11, wherein the second sticker (40) is any one selected from fiber paper, craft paper, tipping paper and synthetic paper.

16. The electronic cigarette vaporizer according to claim 11, wherein a total of a thickness of the second sticker (40) and a diameter of the filter tip (30) is equal to an outer diameter of the vaporizer tube (110).

17. The electronic cigarette vaporizer according to claim 11, wherein the second sticker (40) is further covered on one end of the vaporizer body (10).

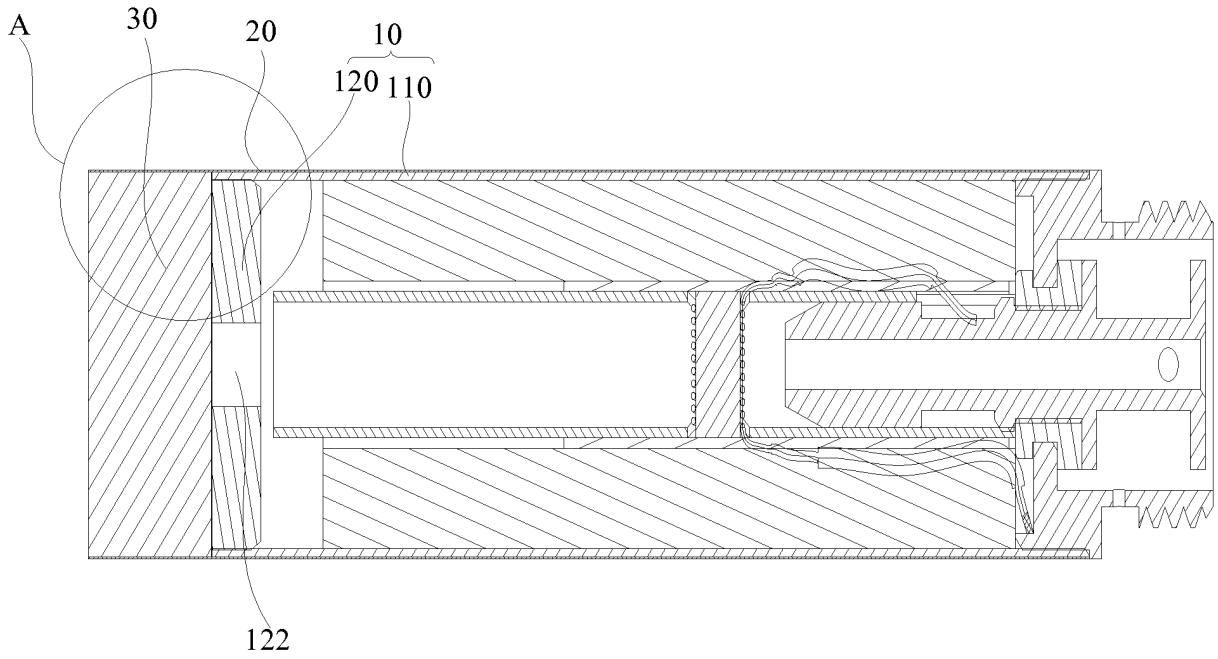

Fig. 1

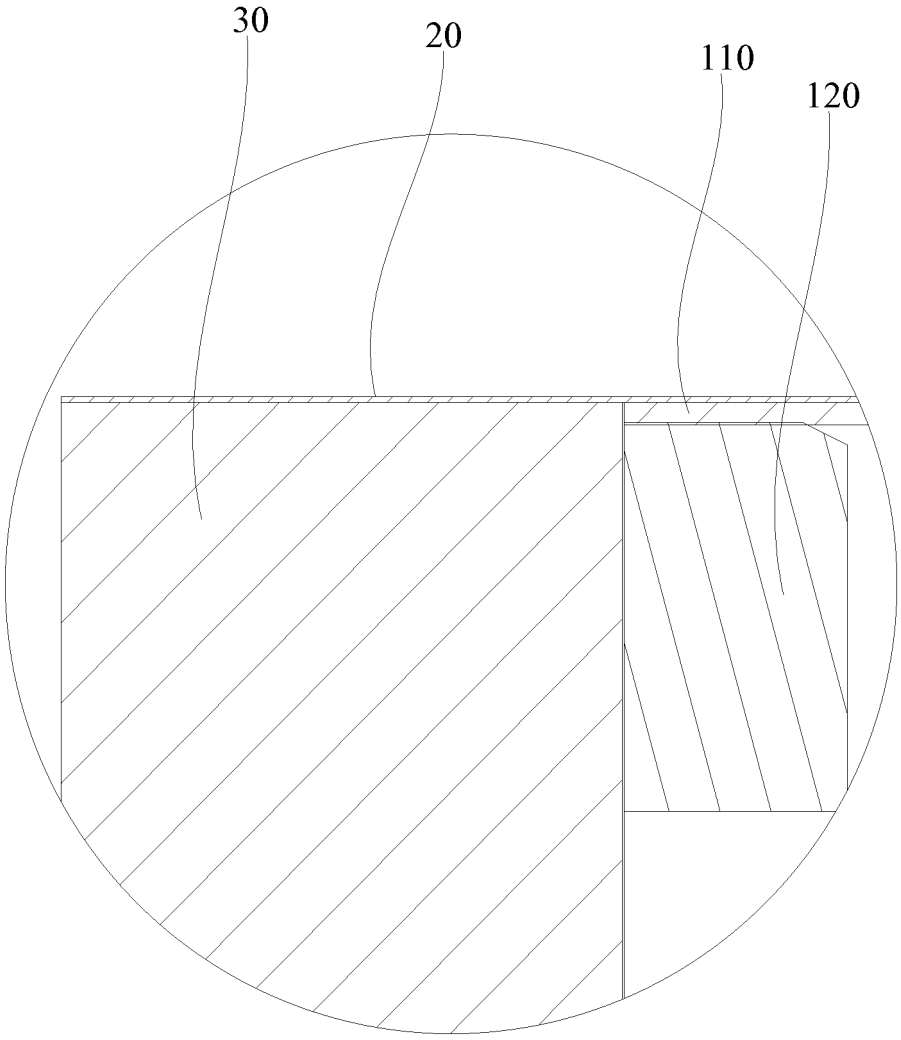

Fig. 2

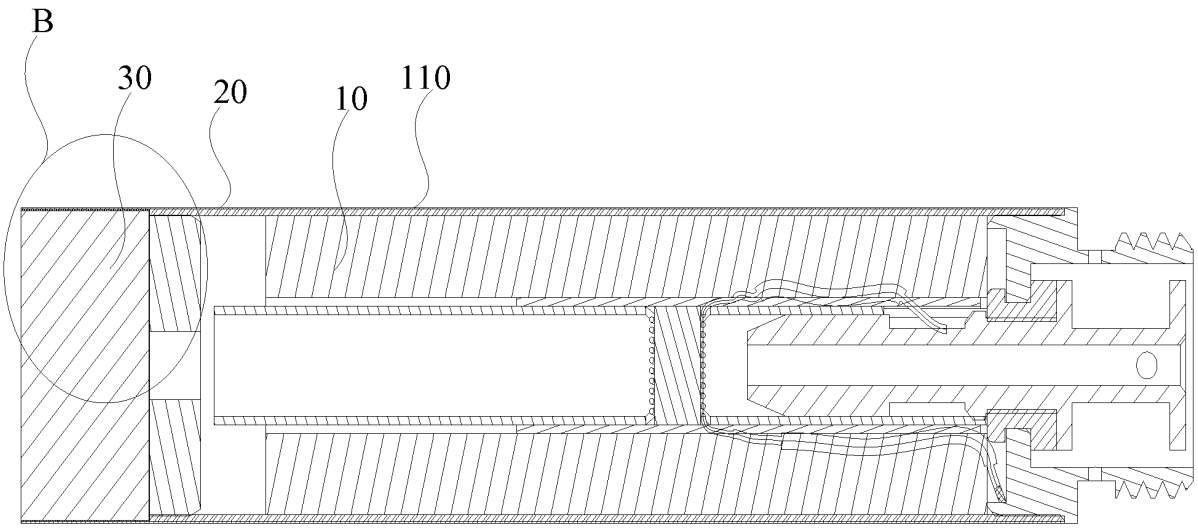

Fig. 3

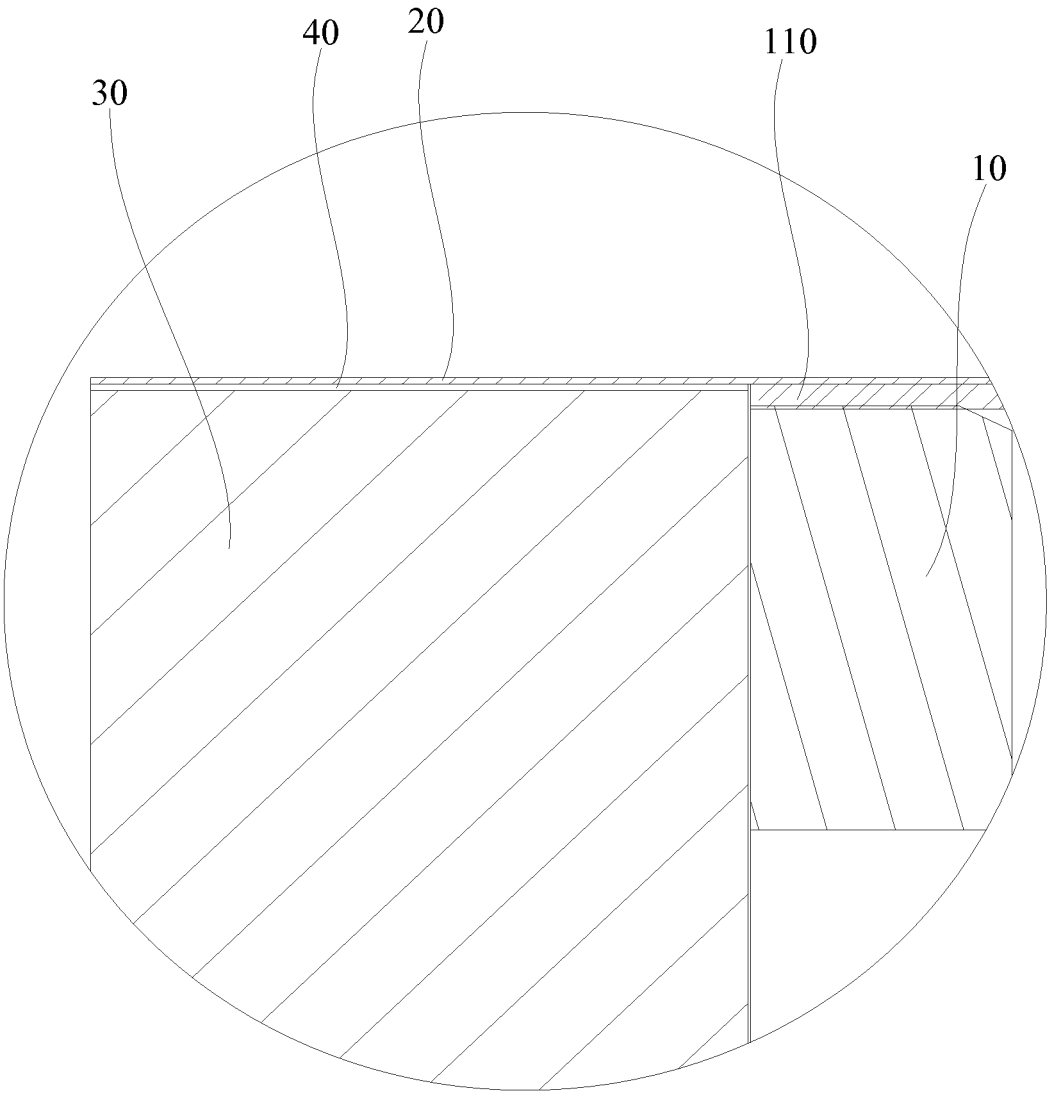

Fig. 4

INTERNATIONAL SEARCH REPORT

International application No.
PCT/CN2013/079246

A. CLASSIFICATION OF SUBJECT MATTER

A24F 47/00 (2006.01) i

According to International Patent Classification (IPC) or to both national classification and IPC

B. FIELDS SEARCHED

Minimum documentation searched (classification system followed by classification symbols)

IPC: A24D, A24F, A61M, B05B

Documentation searched other than minimum documentation to the extent that such documents are included in the fields searched

Electronic data base consulted during the international search (name of data base and, where practicable, search terms used)

CNKI, CNPAT,WPI & EPODOC: cigar, cigarette, tobacco, smoking, inhal+, simulate, imitate, substitute, electric, atomizer, vaporizer, aerosol

C. DOCUMENTS CONSIDERED TO BE RELEVANT

Category*	Citation of document, with indication, where appropriate, of the relevant passages	Relevant to claim No.
X	CN 203040684 U (DESONIC ELECTRONIC CO., LTD.), 10 July 2013 (10.07.2013), description, pages 1-2, and figures 1-3	1, 2, 6, 8-10
Y	CN 203040684 U (DESONIC ELECTRONIC CO., LTD.), 10 July 2013 (10.07.2013), description, pages 1-2, and figures 1-3	3-5
Y	CN 202233005 U (DESONIC ELECTRONIC CO., LTD.), 30 May 2012 (30.05.2012), description, pages 1-3, and figures 1-3	3-5
A	WO 2009/155734 A (BERNARD, M.), 30 December 2009 (30.12.2009), the whole document	1-17

☐ Further documents are listed in the continuation of Box C. ☒ See patent family annex.

* Special categories of cited documents:

"A" document defining the general state of the art which is not considered to be of particular relevance

"E" earlier application or patent but published on or after the international filing date

"L" document which may throw doubts on priority claim(s) or which is cited to establish the publication date of another citation or other special reason (as specified)

"O" document referring to an oral disclosure, use, exhibition or other means

"P" document published prior to the international filing date but later than the priority date claimed

"T" later document published after the international filing date or priority date and not in conflict with the application but cited to understand the principle or theory underlying the invention

"X" document of particular relevance; the claimed invention cannot be considered novel or cannot be considered to involve an inventive step when the document is taken alone

"Y" document of particular relevance; the claimed invention cannot be considered to involve an inventive step when the document is combined with one or more other such documents, such combination being obvious to a person skilled in the art

"&" document member of the same patent family

Date of the actual completion of the international search	Date of mailing of the international search report
14 March 2014 (14.03.2014)	**27 March 2014 (27.03.2014)**
Name and mailing address of the ISA/CN: State Intellectual Property Office of the P. R. China No. 6, Xitucheng Road, Jimenqiao Haidian District, Beijing 100088, China Facsimile No.: (86-10) 62019451	Authorized officer **BIAN, Xin** Telephone No.: (86-10) **62085677**

Form PCT/ISA/210 (second sheet) (July 2009)

INTERNATIONAL SEARCH REPORT
Information on patent family members

International application No.
PCT/CN2013/079246

Patent Documents referred in the Report	Publication Date	Patent Family	Publication Date
CN 202233005 U	30.05.2012	None	
CN 203040684 U	10.07.2013	None	
WO 2009/155734 A	30.12.2009	US 2011278189 A1	17.11.2011
		WO 2011146315 A2	24.11.2011
		US 2011277780 A1	17.11.2011

Form PCT/ISA/210 (patent family annex) (July 2009)