(12) INTERNATIONAL APPLICATION PUBLISHED UNDER THE PATENT COOPERATION TREATY (PCT)

(19) World Intellectual Property Organization
International Bureau

(43) International Publication Date
27 July 2023 (27.07.2023)

WIPO | PCT

(10) International Publication Number
WO 2023/139513 A1

(51) International Patent Classification:
A01G 9/02 (2018.01) *A01G 9/14* (2006.01)
A01G 9/24 (2006.01)

(21) International Application Number:
PCT/IB2023/050461

(22) International Filing Date:
19 January 2023 (19.01.2023)

(25) Filing Language: English

(26) Publication Language: English

(30) Priority Data:
290012 20 January 2022 (20.01.2022) IL

(71) Applicant: **SINETERRA INTERNATIONAL AG** [CH/CH]; 5 Rue de l'Université, 1205 Geneva (CH).

(71) Applicant *(for MW only)*: **JACOBSON, Zvi** [IL/IL]; c/o COHN, DE VRIES, STADLER & CO., P.O.B 10278, 6110103 Tel Aviv (IL).

(72) Inventor: **ARIAS, Ruben**; 3006 apartment, 201-don building, 30 Jwadongsunhwan-ro 433 beon-gil, Haeundea Hill State We've, Haeundae-gu, Busan (KR).

(74) Common Representative: **JACOBSON, Zvi**; c/o COHN, DE VRIES, STADLER & CO., P.O.B 10278, 6110103 Tel Aviv (IL).

(81) Designated States *(unless otherwise indicated, for every kind of national protection available)*: AE, AG, AL, AM, AO, AT, AU, AZ, BA, BB, BG, BH, BN, BR, BW, BY, BZ, CA, CH, CL, CN, CO, CR, CU, CV, CZ, DE, DJ, DK, DM, DO, DZ, EC, EE, EG, ES, FI, GB, GD, GE, GH, GM, GT, HN, HR, HU, ID, IL, IN, IQ, IR, IS, IT, JM, JO, JP, KE, KG, KH, KN, KP, KR, KW, KZ, LA, LC, LK, LR, LS, LU,

(54) Title: GREENHOUSE AND HORTICULTURE SYSTEM

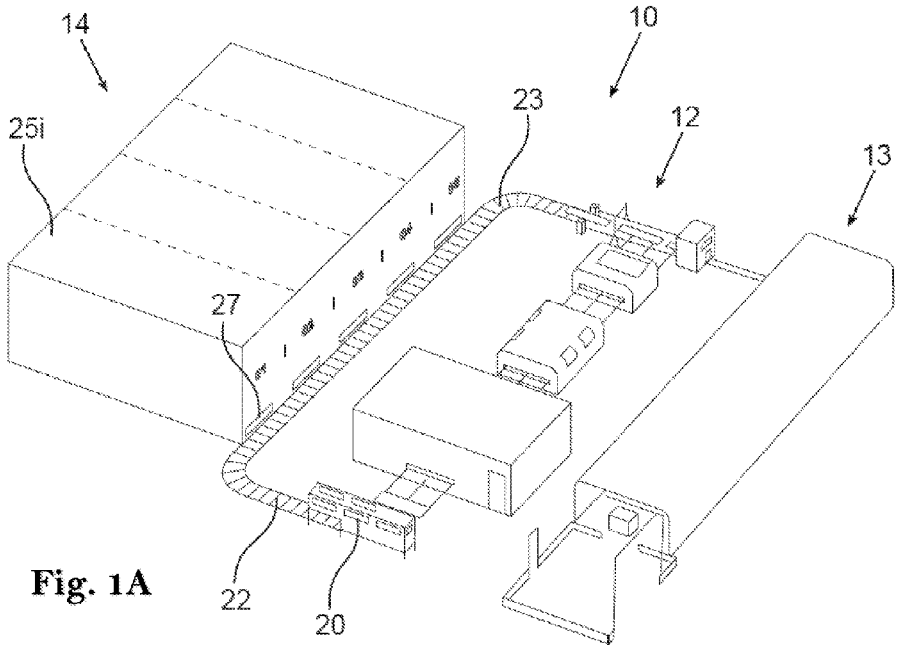

Fig. 1A

(57) Abstract: A horticulture crop growing system comprising a growing tray preparation station wherein a plurality of growing trays are pre-treated, filled with a growing bed and planted, a growing tray displacing system for transferring planted growing trays from the growing tray preparation station to a horticulture crop growing facility, a closed structure with a controlled environment treating system and one or more tray inlet/outlet ports, and one or more horticulture crop growing modules. The horticulture crop growing module comprise a plurality of parallelly disposed single-rowed growing towers, each comprising an array of vertically supported growing trays, a growing tray manipulation system for receiving planted growing trays via the tray inlet port and loading them to allocated growing towers, and for displacing the growing trays between the growing towers and through treating stations within the horticulture crop growing module, and for displacing the growing trays to the growing tray outlet port.

WO 2023/139513 A1

[Continued on next page]

LY, MA, MD, MG, MK, MN, MW, MX, MY, MZ, NA, NG, NI, NO, NZ, OM, PA, PE, PG, PH, PL, PT, QA, RO, RS, RU, RW, SA, SC, SD, SE, SG, SK, SL, ST, SV, SY, TH, TJ, TM, TN, TR, TT, TZ, UA, UG, US, UZ, VC, VN, WS, ZA, ZM, ZW.

(84) **Designated States** *(unless otherwise indicated, for every kind of regional protection available)*: ARIPO (BW, CV, GH, GM, KE, LR, LS, MW, MZ, NA, RW, SD, SL, ST, SZ, TZ, UG, ZM, ZW), Eurasian (AM, AZ, BY, KG, KZ, RU, TJ, TM), European (AL, AT, BE, BG, CH, CY, CZ, DE, DK, EE, ES, FI, FR, GB, GR, HR, HU, IE, IS, IT, LT, LU, LV, MC, ME, MK, MT, NL, NO, PL, PT, RO, RS, SE, SI, SK, SM, TR), OAPI (BF, BJ, CF, CG, CI, CM, GA, GN, GQ, GW, KM, ML, MR, NE, SN, TD, TG).

Declarations under Rule 4.17:

— *of inventorship (Rule 4.17(iv))*

Published:

— *with international search report (Art. 21(3))*

— *in black and white; the international application as filed contained color or greyscale and is available for download from PATENTSCOPE*

GREENHOUSE AND HORTICULTURE SYSTEM

TECHNOLOGICAL FIELD

The present disclosure is concerned with a greenhouse and with a horticulture system making use of same. More particularly, the disclosure is concerned with an automated greenhouse and an eco-growing system.

BACKGROUND ART

References considered to be relevant as background to the presently disclosed subject matter are listed below:

- US20180235156
- WO19056057
- WO20098890

Acknowledgement of the above references herein is not to be inferred as meaning that these are in any way relevant to the patentability of the presently disclosed subject matter.

BACKGROUND

US Patent Publication No. 2018/235156 discloses a high density horticulture growing system comprises a plurality of containers in which crops are grown and one or more elevator devices to automatically move the containers between vertically spaced levels of one or more modular racks. Each elevator device comprises a carrier to transport the containers between the vertically spaced levels and a ram to push the containers from the carrier onto one or more longitudinal supports at the vertically spaced levels. A first conveying device moves containers at least horizontally from a crop planting area to each rack and a second conveying device moves containers at least horizontally from each rack to a crop storage area. One or more processors control movement of the containers, watering of the crops, temperature, lighting and other parameters of the system. A plurality of the high-density horticulture growing systems are in communication with a centralized data monitoring and collection system for the transmission and reception of data relating to the growing of crops.

International Patent Publication No. WO 2019/056057 discloses an apparatus for sequential carriage of growth trays around and through a mechanized, multi-level farming structure having an entry side or path and an exit side or path for said growth trays of a crop, the carriage apparatus including: an inward transporter disposed along the entry side of the farming structure for transporting at least one tray containing growth media from a seeding station; an upstanding elevator for elevating said at least one tray to a selected level of the farming structure and inserting said tray into entry side of the farming structure; an automatic controller for coordinating movement of the trays into the entry side and/or out of the exit side of the farming structure; an upstanding receiver for receiving and lowering said at least one tray containing a mature crop from the exit side of the farming structure; an outward transporter disposed along the exit side of the farming structure for transporting said at least one tray to a harvesting station; a growth media remover for removing growth media from each said at least one tray; and a tray washer for emptying and washing empty trays. Also disclosed is a method for sequential carriage of growth trays around and through the multi-level farming structure.

International Patent Publication No. WO 2009/8890 discloses a growth house comprising a housing defining an inner space. The inner space is provided with a storage structure comprising several vertically displaced storage levels each being configured to receive one or more tray members with one or more plants. The housing comprises an opening and is opaque and configured to prevent sunlight from entering the inner space. The growth house comprises a moveably arranged transportation unit configured to horizontally and vertically displace one or more tray members and thereby transport the one or more tray members between a first position outside the housing and a second position on a storage structure inside the housing, wherein a plurality of light sources are arranged to emit light towards the plants.

GENERAL DESCRIPTION

The present disclosure is directed to an automated greenhouse and horticulture growing system, comprising a large scale, fully automated crop growing facility.

According to a first aspect of the disclosure there is a horticulture crop growing system, comprising:

a growing tray preparation station wherein a plurality of growing trays are pre-treated, filled with a growing bed and planted;

a growing tray displacing system for transferring planted growing trays from the growing tray preparation station to a horticulture crop growing facility;

the horticulture crop growing facility comprises a closed structure with a controlled environment treating system, one or more controlled growing tray inlet/outlet ports, and comprising a plurality of horticulture crop growing modules;

each horticulture crop growing module comprising a plurality of parallelly disposed single-rowed growing towers, each comprising an array of vertically supported growing trays, a growing tray manipulation system for receiving planted growing trays at the growing tray inlet port and loading them to allocated tray locations along the growing towers, and for displacing the growing trays between allocated tray locations and through treating stations within the horticulture crop growing module, and for displacing the growing trays to the growing tray outlet port.

The terms *planted* and *planting* refer collectively to the process of sowing seeds or planting young plants.

According to a second aspect of the disclosure there is a horticulture crop growing facility comprising a closed structure with a controlled environment treating system, and one or more controlled growing tray inlet/outlet ports, and comprising a plurality of horticulture crop growing modules;

each horticulture crop growing module comprising a plurality of parallelly disposed single-rowed growing towers, each comprising an array of vertically supported growing trays, a growing tray manipulation system for receiving planted growing trays at the growing tray inlet port and loading them to allocated tray locations along the growing towers, and for displacing the growing trays between allocated tray locations and through treating stations within the horticulture crop growing module, and for displacing the growing trays to the growing tray outlet port.

According to a third aspect of the disclosure there is a horticulture crop growing module for use at a horticulture crop growing facility comprising a closed structure with a controlled environment treating system, and one or more (*e.g.*, controlled) growing tray inlet/outlet ports; each horticulture crop growing module comprising a plurality of parallelly disposed single-rowed growing towers, each of said plurality of single-rowed towers configured to receive an array of vertically supported growing trays, a growing tray manipulation system for receiving planted growing trays at the growing tray inlet port and loading them to allocated growing towers, and for displacing the growing trays

through treating stations within the horticulture crop growing module, and for displacing the growing trays to the growing tray outlet port. The single-rowed growing towers can be configured to vertically move the growing trays along/within the growing towers. The growing tray manipulation system can comprise one or both of a top tray conveying system extending above the growing towers and a bottom tray conveying system extending below the growing towers.

According to yet another aspect there is an automated horticulture crop growing system, comprising a growing tray preparation station wherein a plurality of growing trays are pre-treated, filled with a growing bed and planted, a growing tray displacing system for transferring planted growing trays from the growing tray preparation station to a horticulture crop growing facility, a closed structure with a controlled environment treating system, one or more growing tray inlet/outlet ports, and one or more horticulture crop growing modules. Each horticulture crop growing module comprises a plurality of parallelly disposed single-rowed growing towers, each of which configured to receive vertically supported growing trays and vertically move the growing trays along and within the single-rowed growing tower for transferring them between tray locations therewithin, a growing tray manipulation system comprising one or both of a top tray conveying system for loading or unloading growing trays from a top end of each growing tower, and a bottom tray conveying system for loading or unloading growing trays from a bottom end of each growing tower.

The growing tray manipulation system can be configured for receiving from the growing tray displacing system planted growing trays via the growing tray inlet/outlet port and loading them to allocated growing towers of the horticulture crop growing module, displacing the growing trays between the allocated growing towers to treating stations within the horticulture crop growing module, and unloading the growing trays by displacing them out of the horticulture crop growing facility through the growing tray inlet/outlet port.

The arrangement according to the present disclosure is such that a plurality of growing trays are autonomously introduced through the growing tray inlet port into a horticulture crop growing module and are automatically loaded into the growing towers, and wherein a growing cycle of the crops includes exposing the growing trays to treating stations including essential treatment within the growing towers and displacing the growing trays along a treating path whereby each tray is exposed to additional treatment

at treating stations extending along said a treating path; whereby when the crops are ready for harvesting the growing trays are autonomously transferred from the horticulture crop growing module through the outlet port.

The treating stations can include any one or more of treatments applied along the growing cycle and configured for promoting and enhancing growth of the crops, *i.e.*, providing ideal growth conditions, to obtain a speedy grow, healthy and highly nutritive crops. For that purpose, in some embodiments the horticulture crop growing module is further configured with an Artificial Intelligence system (AI). A plurality of sensors distributed within the horticulture crop growing module along the treating path are used for obtaining parameter signals associated with the growing cycle of the crops and with the position and state of the growing trays and treating stations. A controller is used for receiving and processing the parameter signals and generating operation signals responsive thereto, for controlling operation of the treating stations and automatic displacement of the growing trays along the growing path.

The treating stations can include any one or more of irrigation, illumination, humidity, air temperature, fertilizing/nutrition, hydrogenation, growing tray heating, radiation at different wavelength, playing sound, pollination, sterilization, etc. It is appreciated that the parameters of such treatment can be controlled *e.g.*, controlling duration of each treatment, intensity (*e.g.*, temperature, light wavelength, etc.). A treating station can be used for applying several treatments, *e.g.*, fertilizing/nutrition can take place through irrigation. Heating can be applied by heating one or more of the air and irrigation liquid and the growing trays, etc.

The sensors *e.g.*, of the AI system, can comprise any one or more of imaging sensors (for obtaining data relating to ripeness and/or health of the crop, *e.g.*, shape, size, density, color and temperature of the crops and for identifying defected crops and pests), sugar content analyzer (*e.g.*, Brix meter/ Brix refractometer), temperature sensors, humidity sensors, chemical sensors (*e.g.*, for measuring acidity and detecting different chemicals), etc. The AI system, is also suited for deciding, based on continuously collected parameters, when the crops have reached a harvesting state and are ready for discharging from the horticulture crop growing module.

According to a particular embodiment of the disclosure, the horticulture crop growing module comprises a growing tray manipulation system comprising a bottom tray conveying system extending below the growing towers and configured for

receiving/delivering growing trays from/to the inlet/outlet port, respectively, and for conveying the growing trays to a tray loading/unloading station below at least one of the growing tower, and in some embodiments below each respective growing tower, and/or for conveying the growing trays to a growing tray lift *e.g.*, configured for receiving the growing trays from the bottom tray conveying system and transporting them to a top tray conveying system extending above the growing towers. The top tray conveying system can be configured for conveying the growing trays to a tray unloading station above each respective growing tower.

Each one or more of the bottom tray conveying system, and the growing tray lift, and the top tray conveying system, can further be configured for conveying the growing trays to one or more treating stations extending along a growing tray conveying path. Each of the bottom tray conveying system, and the growing tray lift, and the top tray conveying system can be used for conveying growing trays at either direction.

The horticulture crop growing system can further comprise a finished produce station configured for receiving growing trays from the one or more horticulture crop growing modules, whereat growth is harvested, packed and stored at appropriate conditions, ready for delivery/shipment, at an automated, hands-free handling station.

According to a fourth aspect of the disclosure there is a horticulture crop growing method, used in conjunction with a horticulture crop growing module according to the present disclosure, comprising the following steps:

i. Receiving a plurality of planted growing trays into the horticulture crop growing module through the inlet port and loading them onto a bottom tray conveying system;

ii. Loading the growing trays from the bottom tray conveying system into the growing towers;

iii. Commencing a growing cycle wherein the growing trays are circulated between a plurality of treating stations disposed within the horticulture crop growing module;

iv. Monitoring and obtaining data associated with each growing tray and relating to ripeness and/or health of the crops growing on the growing trays;

v. Repeating steps iii and iv until crops are at harvesting state;

vi. Conveying the growing trays from the growing towers to the outlet port for collecting the growing trays.

Any one or more of the following features, designs and configurations can be applied to any one or more of the different aspects of the present disclosure, separately or in various combinations thereof:

- The horticulture crop growing system can be received within a closed, treated environment location; The term treated environment refers to a clean environment, free of pesticides or any biological material, humidity and temperature controlled etc.;
- The horticulture crop growing facility can be received within a closed, treated environment location;
- The horticulture crop growing module can be received within a closed, treated environment location;
- The growing tray preparation station can be received within a closed, treated environment location;
- Prior to a growth cycle, the growing tray preparation station, the growing trays and the horticulture crop growing facility can be pre-treated to disinfect the vicinity and gear;
- The one or more growing tray inlet port and the growing tray outlet port of the horticulture crop growing facility can be a uniform opening, or a dedicated opening for each of the inlet port and the outlet port, with a controlled door for maintaining the controlled environment at the vicinity of the facility;
- The horticulture crop growing facility can be compartmented, wherein each horticulture crop growing module is received within a compartment, each of which is a controlled environment;
- The growing towers are each configured with a growing tray support system, for retaining the trays vertically aligned wherein a duty, bottom most growing tray, is arrested by a tray arresting mechanism at a bottom portion of the support system, and wherein each consecutive growing tray is supported over another growing tray, however readily displaceable to move along the tower;
- The growing tray manipulation system can comprise one or both of a top tray conveying system for loading growing trays into (or for unloading them from) the growing towers from a top end of each growing tower, and a bottom tray

conveying system for loading growing trays into (or for unloading them from) the growing towers from a bottom end of each growing tower, respectively;

- The growing tray manipulation system is configured for deploying growing trays into the growing towers and for transporting growing trays between the treating stations and the growing towers of the horticulture crop growing modules;
- An illumination system can be configured for illuminating each growing tray;
- The illumination system can be disposed on tray support rails of the growing tower, and/or at a bottom face of the growing trays;
- The tray support rails define a sliding path wherein trays within a growing tower are slidingly displaceable there along, owing to gravitational force;
- Irrigation can be applied to the growing trays at a cascade configuration, wherein irrigation is applied to one or more top growing trays at a growing tower, and irrigation liquid flows to growing trays below one another by gravitation;
- Irrigation can be applied by drip irrigation to the topmost growing tray;
- The growing trays can be configured with an irrigation inlet port disposed at a top portion thereof, and an irrigation outlet port disposed at a bottom portion thereof, with an irrigation flow path extending between said ports;
- A normally closed valve can be provided at the irrigation outlet port of the growing trays, said valve configured for opening by a valve opening member configured at an inlet port of a neighboring bottom growing tray, only upon stacking the growing trays on top of one another within the growing towers;
- One or both of the irrigation inlet port and the irrigation outlet port can be configured with a filtering arrangement to prevent growing bed material from drifting between growing trays;
- The valve can be associated with the filtering arrangement, whereby liquid arriving at the valve is filtered;
- A bottommost growing tray within a growing tower can be selectively engaged by a valve opening mechanism configured for opening the valve of the irrigation outlet port of said bottommost growing tray when disposed over said valve opening mechanism;

- A bottommost growing tray within a growing tower can be disposed over a drainage container, and wherein a valve opening mechanism is configured for opening the valve of the irrigation outlet port of said bottommost growing tray when disposed over said drainage container;
- The drainage container can be configured for treating the irrigation liquid (*e.g.*, filtering, adding nutrition ingredients, treating water hardness, temperature regulating, etc.) and for recycling the irrigation liquid to the topmost growing tray;
- Drainage containers within a horticulture crop growing module can be in flow communication with one another, or a common drainage container can be configured for two or more growing towers of the horticulture crop growing module;
- Drained irrigation liquid from one or more of the growing towers within the horticulture crop growing module can be directly collected to an external irrigation liquid treating station;
- Drained irrigation liquid from one or more of the growing towers within the horticulture crop growing module flow by gravity along growing trays within a growing tower, and after flowing through all growing trays within the tower the irrigation liquid flows to an irrigation liquid treating station, within or outside of the growing module, whereat the irrigation liquid is recycled after analyzing and treating, *i.e.*, cleaned, adding nutrients and minerals, treating hardness and pH, etc.;
- Each growing tray can be configured with a readable identifier *e.g.*, a tray ID code, such as bar code, QR code, color code, RFID, digital code, etc., whereby tray data associated with each growing tray can be registered at the controller;
- Tray data can include data relating to the location and status of the growing tray, and/or data concerning the growing cycle of the crops growing on said growing tray;
- Data from sensors and control signals can be transmitted to an external control station (*e.g.*, wirelessly and/or over a serial/parallel data bus);
- An alert signal can be generated upon detecting of malfunction of the system and detection of unusual parameters along the growing cycle of the crops;
- The growing towers are configured for accommodating a vertical stack of growing trays, supported between side bars, wherein a bottom most growing tray

is arrestable by a tray arresting mechanism, wherein consecutive growing trays are disposed on top of one another, whereby disengaging the bottom most tray from the tray arresting mechanism facilitates loading of the bottom most tray onto the bottom tray conveying system, and further entailing downward shifting of the growing trays within the growing tray, under force of gravity;

- The bottom tray conveying system can be implemented by a pair of conveyor chains disposed parallelly and configured for bearing opposite sides of a bottom surface of the growing trays;
- A light illuminating device can be associated with each growing tray within the growing tower;
- The light illuminating device can be articulated to the side bars of the growing tower;
- Each growing tray can be illuminated from two sides:
- A tray arresting mechanism is configured at a bottom portion of the growing tower, said tray arresting mechanism is manipulable between a normally tray arresting position, wherein one or more obstructing elements project into a space below a bottom most growing tray, and a disengaged position wherein the one or more obstructing elements are contracted from said space, thus facilitating a bottom most growing tray to displace from the growing tower;
- The one or more obstructing elements of the tray arresting mechanism can be driven by different mechanisms, *e.g.*, solenoid, cam-and-follower, hydraulic/pneumatic piston, electric motor, etc.;
- the tray arresting mechanism of the growing towers within a horticulture crop growing module can be configured for simultaneous operation, whereby all tray arresting mechanisms within the horticulture crop growing module simultaneously shift between their respective tray arresting position and disengaged position, or the tray arresting mechanisms can shift upon a command signal received from a controller, wherein any one or more tray arresting mechanism can be individually operated;
- According to a particular example, the tray arresting mechanism comprises an activating rod rotatably secured at a bottom portion of the horticulture crop growing module and configured with threaded portions disposed adjacent each growing tower; a plurality of threaded riders, at least one associated

with each growing tower; each rider engaged over each threaded portion and restrained for axial displacement along the activating rod; and wherein each rider comprises a tray engaging member; whereby rotating the threaded rod in one direction entails simultaneous axial displacement of the riders into their tray arresting position, and rotating the threaded rod in an opposite direction entails simultaneous axial displacement of the riders into their disengaged position;

- The tray engaging member can be a pin projecting from the rider and configured for arresting within an opening at a bottom portion of the bottom most tray;
- The tray arresting mechanism can comprise a pair of facing pins, whereby at the tray arresting position said pins displace towards one another, and at the disengaged position said pins displace away from one another;
- The growing trays can be solid trays made of metal or plastic material, having a flat growing portion and two parallel upright side frames disposed at opposite side ends of the tray, wherein growing trays within a growing tower are configured such that a bottom surface of a top growing tray bears over the side frames of a neighboring bottom growing tray;
- A valve opening member (for opening normally closed valve at a top growing tray) is configured at an upright side frame of the neighboring bottom growing tray;
- The growing trays can be engaged by the growing tray lift at a bottom of the trays or at the upright frame thereof;
- The upright side frames of the growing trays can be configured with an engaging recess, and the top tray conveying system can be configured with two side rails each accommodating a plurality of pickup hooks, displaceable along the side rails, and configured for selective arresting with said engaging recesses;
- The two side rails of the top tray conveying system can be fixed over the growing towers within the horticulture crop growing module, wherein engaging with one or more trays takes place upon displacing growing trays upwards towards said side rails;
- Harvesting the crops can be selective, whereby only crops reaching a predefined (*e.g.*, maturity) stage are harvested;

- The horticulture crop growing module can be comprise a growing tray propelling unit configured for ascending or descending a bottom duty growing tray from/to a bottom tray conveying system into/from a respective growing tower;
- Each growing module can be configured as an autonomous growing module, independent of other growing modules, and being self-supplied with all the necessary elements for obtaining a growing cycle, including an inlet/outlet port and a confined controlled environment;
- The top tray conveying system can be fitted also for conveying growing trays to and from an outlet/inlet port.
- The growing trays can comprise a perforated trough element configured to sprinkle irrigation liquids received from the irrigation inlet port.
- The horticulture crop growing module can comprise an irrigation station configured to supply irrigation liquids to growing trays introduced thereinto via their irrigation inlet port.
- The irrigation station can be configured to drain residual irrigation liquids accumulated in the growing trays via their irrigation outlet port.
- The irrigation station can comprise a tilting mechanism configured to drain the residual liquids.
- The bottom tray conveying system can comprise one or more rails extending below the growing towers, and a frame structure configured to move along the one or more rails and transfer or receive a growing tray from a selected one of the growing towers.
- The frame structure can comprise a manipulator unit configured to engage the tray arresting mechanism of the growing tower and controllably change it between the tray arresting position and the disengaged position.
- The frame structure can comprise a lift assembly configured to transfer a growing tray thereby carried to the growing tower, or receive a growing tray from the growing tower.
- The horticulture crop growing module can be configured to change the tray arresting mechanism to its disengaged position when transferring the growing tray to the growing tower, and thereafter to change the tray arresting mechanism back to its tray arresting position for securing the transferred growing tray in a bottommost tray-location of the growing tower.

- The horticulture crop growing module can be configured to change the tray arresting mechanism to its disengaged position when receiving the growing tray from the growing tower, and thereafter to change the tray arresting mechanism back to its tray arresting position for securing a downwardly translated growing tray in a bottommost tray-location of the growing tower.

BRIEF DESCRIPTION OF THE DRAWINGS

In order to better understand the subject matter that is disclosed herein and to exemplify how it may be carried out in practice, embodiments will now be described, by way of non-limiting example only, with reference to the accompanying drawings, in which:

Fig. 1A is a schematic representation of a horticulture crop growing system according to an example of the present disclosure;

Fig. 1B illustrates a horticulture crop growing facility seen in the horticulture crop growing system of **Fig. 1A**;

Fig. 2A illustrates the horticulture crop growing facility of **Fig. 1A**, with its walls made transparent for visualizing interior thereof and exposing a horticulture crop growing module;

Fig. 2B is an enlargement of the horticulture crop growing module portion seen in **Fig. 2A**;

Fig. 3A is a front, right, perspective view of the horticulture crop growing module seen in **Fig. 2B**, with walls removed;

Fig. 3B is a front, left, perspective view of the horticulture crop growing module seen in **Fig. 3A**;

Fig. 4A illustrates the horticulture crop growing module seen in **Fig. 3A**, with some elements removed for sake of simplification;

Fig. 4B is an enlargement of the portion marked **4B** in **Fig. 4A**;

Fig. 4C is an enlargement of the portion marked **4C** in **Fig. 4B**;

Fig. 4D is an enlargement of the portion marked **4D** in **Fig. 4B**;

Fig. 5A is an enlargement of the portion marked **5A** in **Fig. 4A**;

Fig. 5B is an enlargement of the portion marked **5B** in **Fig. 5A**;

Fig. 5C is a left side perspective view of the portion illustrated in **Fig. 5B**;

Fig. 5D is an enlargement of the portion marked **5D** in **Fig. 5A**;

Fig. 5E is a bottom perspective view of the portion illustrated in **Fig. 5B**;

Fig. 6 is an enlargement of the portion marked **6A** in **Fig. 4D**;

Fig. 7A is a vertical section along line **7A – 7A** in **Fig. 4D**

Fig. 7B is an enlarged view of a valving system seen in the portion marked **7B** in **Fig. 7A**, the valve at its open position;

Fig. 7C is the same as **Fig. 7B**, with the valve at a closed position;

Fig. 7D is a vertical section along line **7D – 7D** in **Fig. 4C**;

Fig. 8A is a vertical section along line **8A -8A** in **Fig. 4C**;

Fig. 8B is an enlarged view of the portion marked **8B** in **Fig. 8A**;

Fig. 8C is an enlarged view of the portion marked **8C** in **Fig. 8A**;

Fig. 9A is an enlarged view of the portion marked **9A** in **Fig. 3A**;

Fig. 9B is an enlarged view of the portion marked **9B** in **Fig. 9A**;

Fig. 9C is a vertical section along line **9C – 9C** in **Fig. 9B**;

Fig. 10A is the same as **Fig. 3A**, with a growing tray lift loaded with growing trays;

Fig. 10B is an enlarged view of the portion marked **10B** in **Fig. 10A**;

Fig. 11A is a perspective view of a growing tray according to an example of the disclosure;

Fig. 11B is a vertical section along line **11B – 11B** in **Fig. 11A**;

Fig. 12A is an enlargement of the portion marked **12A** in **Fig. 4C**, illustrating the growing tray locking mechanism at a tray arresting position;

Fig. 12B illustrates the growing tray locking mechanism at a tray loading position;

Fig. 13A is a bottom perspective view illustrating a growing tray propelling unit according to an example, whereby several other subassemblies have been hided for sake of clarification;

Fig. 13B is an enlarged vertically sectioned view of the portion marked **13B** in **Fig. 13A**;

Fig. 14 demonstrates growing tray loading stages of possible embodiments;

Figs. 15A to **15D** show possible configurations of the bottom tray conveying system and lifting mechanism thereof;

Figs. 16A to **16E** exemplify a growing tray loading according to possible embodiments;

Figs. 17A to **17C** exemplify growing tray unloading according to possible embodiments utilizing a tray locking mechanism;

Figs. 18A to **18F** show a possible configuration of the top tray conveying system;

Figs. 19A to **19K** demonstrate growing tray loading utilizing the top tray conveying system;

Fig. 20 illustrates a plants growing arrangement and cultivation cycle of possible embodiments;

Figs. 21A to 21C show irrigation arrangements of possible embodiments;

Figs. 22A to **22H** show an irrigation arrangement of other possible embodiments;

Figs. 23A to **23C** show a draining arrangement of possible embodiments;

Figs. 24A to **24D** show a system ventilation arrangement of possible embodiments;

Figs. 25A to **25H** show a pollination sequence of possible embodiments;

Fig. 26 shows an environment control arrangement of possible embodiments; and

Figs. 27A and **27B** demonstrate crop monitoring arrangement of possible embodiments.

DETAILED DESCRIPTION OF EMBODIMENTS

Attention is first directed to **Fig. 1A** of the drawings schematically illustrating a horticulture crop growing system according to an example of the disclosure, generally designated **10**. The horticulture crop growing system **10** comprises a growing tray preparation station generally designated **12**, a finished produce station generally designated **13**, and a horticulture crop growing facility generally designated **14**.

The growing tray handling and preparation station **12** is a closed, typically a treated environment, configured for cleaning and disinfecting growing trays, applying a growing media (*i.e.*, any type of treated growing soil, natural or artificial, or a mixture thereof) and applying of growing material *i.e.*, planting or sowing. The term *'treated environment'* refers to a clean environment, substantially free of pesticides or any biological material, humidity and temperature controlled etc.

Once ready, a plurality of growing trays **20** are deployed from the growing tray preparation station **12** and are conveyed over a conveying system **22** towards the horticulture crop growing facility **14**. It is appreciated that the conveying system **22** can be a closed environmental system (*i.e.*, extending through a treated environment), or the

horticulture crop growing system **10** at its entirety can be received within a treated environment.

The horticulture crop growing facility **14**, is a closed structure, comprising one or more (five in the present example) horticulture crop growing modules generally designated **25** numbered $\mathbf{25_i}$ to $\mathbf{25_v}$, each of which being a separate treated environment. Each horticulture crop growing module **25** comprises a growing tray inlet/outlet port **27**, fitted with a (*e.g.*, guillotine-type) door, displaceable between a closed position and an open position facilitating inlet/outlet of a growing tray **20** therethrough. In the following figures the walls **26** of the horticulture crop growing module **25** have been removed for sake of clarity.

It is appreciated that each growing module can be configured as an autonomous growing module, independent of other growing modules, and being self-supplied with all the necessary elements for obtaining a growing cycle, including an inlet/outlet port and a confined controlled environment, as will be discussed hereinbelow.

Each horticulture crop growing module **25** is configured with a plurality of single-rowed growing towers generally designated **30**, each configured for receiving an array of vertically supported growing trays **20**. The horticulture crop growing module **25** is further configured with a growing tray manipulation system for receiving planted growing trays **20** at the growing tray inlet port **27** and loading them to allocated tray locations at the growing towers **30**, and for displacing the growing trays between allocated tray locations and through treating stations within the horticulture crop growing module, and for displacing the growing trays to the growing tray outlet port, to be explained herein after in greater detail.in the present example each horticulture crop growing module **25** comprises ten growing towers designated $\mathbf{30_i}$ to $\mathbf{30_x}$.

The growing tray manipulation system is configured with a bottom tray conveying system generally designated **35** extending below the growing towers **30** and configured for receiving/delivering growing trays **20** from/to the inlet/outlet port **27**, and for conveying the growing trays **20** to a tray loading/unloading station generally designated **40** (numbered with the same index $\mathbf{40_i}$ to $\mathbf{40_x}$, as of the respective growing tower) below each growing tower $\mathbf{30_i}$ to $\mathbf{30_x}$. The bottom tray conveying system **35** is further designed for conveying the growing trays **20** to a growing tray lift, generally designated **45**, positioned at an opposite end of the horticulture crop growing module **25** and configured for receiving the growing trays **20** from the bottom tray conveying system **35** and

transporting them to a top tray conveying system, generally designated **48**, extending along the horticulture crop growing module **25** and above the growing towers **40**$_i$ to **40**$_x$, wherein the top tray conveying system **48** is configured for conveying the growing trays **20** to a tray unloading station **50** above each respective growing tower, generally designated **50** (numbered with the same index **50**$_i$ to **50**$_x$, as of the respective growing tower), as will be explained hereinafter. According to another example of the disclosure, the top tray conveying system **48** can be fitted also for conveying growing trays to and from an outlet/inlet port, said outlet/inlet port can be a single port or an auxiliary port, *i.e.*, configured in addition to port **27**.

Further attention is directed to **Figs. 11A** and **11B** illustrating a growing tray **20** comprising a tray-like portion **60** with a peripheral side wall **62** configured for receiving a growing media (not shown in the Figs.), and configured with two normally closed valves **64** each disposed near a respective end of the growing tray **20** and covered by a screen-cover **66**, to prevent soil or growing media from malfunctioning valve operation as will be discussed hereinafter. The growing tray **20** is further configured at its respective ends with a frame support **70**, fitted at a center, top-most portion thereof with a valve manipulating hollow tubular segment **72**, and an engaging recess **76** along the top bar **79** of the frame **70**, with an opening **78** defining a pickup hook engagement opening. It can be seen that the engaging recess **76** has a first narrow section **76**$_i$, a second narrow section **76**$_{ii}$ and an intermediate wider section **76**$_{iii}$ connecting between the first and second narrow sections, **76**$_i$ and **76**$_{ii}$.

As can be further seen, best in **Figs. 7B**, **7C**, **7D**, **8B**, **8C** and **11B**) the valve **64** comprises a tubular housing **80** with a top inlet opening **82** extending to a bottom outlet opening **84**, with a sealing mushroom-like plunger **86** biased by a coiled spring **88** into a normally closed position (**Fig. 7C**). Thus, the arrangement is such that the valve **64** is normally sealed when the plunger **86** sealingly bears over the top inlet opening **82**, and however displaces into an open position (*e.g.*, see **Figs. 7B** and **8B**) upon penetration of a valve manipulating hollow tubular segment **72**, of a neighboring bottom tray, into the bottom outlet opening **84**, thus displacing the plunger **86** into the open position, disengaged from the top inlet opening **82**, wherein liquid can flow from the top tray along arrowed lines **90** (see **Fig. 7B**) into the tubular segment **72** and down to the neighboring bottom tray, as will further discussed hereinafter.

Further attention is now directed to elements of the tray manipulation system. Referring first to the bottom tray conveying system **35** (see *e.g.*, **Figs. 4A**, **4C**, **5B**, **8B** and **8C**) there is a pair of parallelly extending support rails **100**, each in the form of a double hollow profile accommodating an endless tray conveying belt **102**, wherein a top portion of the belt **102** slightly projects through a recess **106** at a top one of the hollow profiles, and wherein the conveying belt **102** is tensioned over an idle pulley **107** (see **Figs. 4C** and **5C**) and a driving pulley **108** secured over a pulley rod **110** which in turn is engaged with an electric motor **114**. The arrangement is such that a bottom surface **120** of a bottom transit growing tray **20_b** bears overs the conveying belt **102** (projecting through the hollow profile), whereby displacing the conveying belt **102** (upon rotating the motor **114** in either direction) entails corresponding linear displacement of the bottom transit growing tray **20_b** between locations along a path extending between an inlet/outlet station adjacent the inlet/outlet port **27** and a growing tray lift position adjacent the growing tray lift **45**. It should be appreciated that an outside surface of the conveying belt **102** and/or the bottom surface **120** of the growing trays **20** can be configured with a friction enhancing arrangement.

Next sub-assembly, part of the tray manipulation system, is the growing tray lift generally designated **45**, disposed adjacent a distal end of the bottom tray conveying system **35** and configured for receiving therefrom a tray at a time and elevating it towards the top tray conveying system **48**.

With reference to **Fig. 5A** , **5C** and **5D**, the growing tray lift **45** comprises an endless belt **120** supported by a ladder-like rigid frame structure **126**, said endless belt **120** tensioned between a pair of top, idle pulleys **128**, coaxially coupled to the frame **126**, and a pair of bottom, driving pullies **130** coaxially mounted on an axle **132**, which in turn is coupled to an electric motor **136** via chain **138** (see **Fig. 5C**). A plurality of pairs of growing tray support arms **140** are fixedly secured to the endless belt **120** and are displaceable in a carousel-like fashion about the frame **126**, as the endless belt **120** is rotated by motor **136**. The growing tray support arms **140** are configured such that when a pair of arms are disposed at a tray collecting position, they extend below a bottom duty growing tray **20_{db}** (see **Fig. 5E**) at a distal end of the bottom tray conveying system **35**, whereby the duty growing tray **20_{db}** can be lifted by the growing tray lift **45** to a top level, designated **20_{dt}** (see **Fig. 10B**), ready for collecting by the top tray conveying system **48**.

Turning now to the top tray conveying system **48**, which as seen in **Fig. 10B** comprises two parallelly extending endless belts **150** each supported by a longitudinal rail **154** and each tensioned between an idle pulley **158** (extending behind the growing tray lift **45**, as better seen in **Fig. 4A**) and a driving pulley **160** (seen in **Fig. 4D** extending before the tray loading/unloading station designated $\mathbf{30_x}$), said driving pullies **160** coaxially mounted on an axle **162** coupled for rotation by an electric motor **166**.

The two endless belts **150** are each configured with a plurality of equally spaced pairs of pickup hooks **170**, each having an inverted mushroom like cross section, *i.e.*, radially extending from the belt such that the mushroom stem-like portion is articulated to the endless belt **150**, whereby the configuration is such that the pickup hooks **170** are suspended upside-down from the bottom path of the endless belt. As can be seen, best in **Figs. 9B** and **9C**, the thickness of the stem portion of the pickup hooks **170** is smaller than the width of the narrow sections $\mathbf{76_i}$ and $\mathbf{76_{ii}}$ of the engaging recess **76** for allowing the same to pass therealong, and the diameter of a head-like portion of the pickup hooks **170** is greater than the thickness of the wider section $\mathbf{76_{iii}}$ of the engaging recess **76** to allow it to pass therethrough. However, the diameter of the head-like portion of the pickup hooks **170** is smaller than the width of hook engagement opening **78** (see **Figs. 9B**, **9C**), to thereby enable introducing the pickup hooks **170** therethrough into the engaging recess **76**. The distance **D** between each pair of pickup hooks **170** is greater than the length of the wider section $\mathbf{76_{iii}}$, however smaller than the overall length of the engaging recess **76**, for securing the grip of the pair of pickup hooks **170** over the top bar **79** of the frame **70**. The distance between each neighboring pair of pickup hooks **170** is similar with the distance between the growing towers $\mathbf{30_i}$ to $\mathbf{30_x}$.

The horticulture crop growing module **25** further comprises a growing tray loading/unloading arrangement configured for loading trays into growing tower $\mathbf{30_i}$ to $\mathbf{30_x}$. Hence, as seen in **Fig. 4B**, each of the growing towers $\mathbf{30_i}$ to $\mathbf{30_x}$ comprises a cage-like support frame **180**, wherein the growing trays **20** are slidingly displaceable therealong, with little clearance. A top end **184** of the support frame **180** is open, whereby a growing tray placed over the top end **184** is free to descend, under force of gravity, until it comes to rest over an obstacle, typically another growing tray **20** disposed below, as will be explained. As seen in **Fig. 4D**, the support frame **180** is fitted with an array of treating members **188**, which according to a specific example are an array of light emitters, typically LED bars, extending at both sides of each growing tray **20**, for ideal

light exposure. Noteworthy, the treating members **188** can comprise also heat radiating units, optical sensors, temperature/humidity sensors, etc.

With further attention directed to **Figs. 12A** and **12B**, it can be seen that a bottom end **190** of the support frame **180** is open, however fitted with a growing tray locking mechanism, disposed at both sides of the horticulture crop growing module **25** Reference is made to the front system only, for sake of clarity, though it is appreciated that both front and rear locking mechanisms can be identical and synchronized in operation. The growing tray locking mechanism comprises in this example an elongated rod **200** extending along the bottom end of all the growing towers $\mathbf{30_i}$ to $\mathbf{30_x}$. The rod **200** is coupled for receiving rotary motion from an electric motor **201** and is configured with reverse-threaded portions **202A** and **202B** disposed at intervals in association with each growing tower **30**, with a threaded rider **204A** and **204B** mounted over the respective threaded portions **202A** and **202B**. The riders **204A** and **204B** are configured with an arresting pin **206A**, **206B** extendible through an opening in an arresting plate **208A**, **208B**, whereby rotation of the rod **200** entails axial displacement of the riders **204A** **204B** towards and away from one another. When the riders **204A** and **204B** displace towards one another (see **Fig. 12A**) the tip of the arresting pins **206A**, **206B** projects into an opening **210** configured at the bottom of each growing tray **20**, thus arresting a bottom most growing tray $\mathbf{20_i}$ and preventing it from displacing within the support frame **180**, and further wherein said bottom most growing tray $\mathbf{20_i}$ supports the load of consecutive growing trays stacked thereover within said growing tower. However, once the rod **200** rotates at a reverse direction the riders **204A** and **204B** axially displace away from one another (see **Fig. 12B**), whereby the tip of the arresting pins **206A**, **206B** disengage from the opening **210** at the growing tray $\mathbf{20_i}$, whereby said tray can be displaced upwards by a bottom duty growing tray $\mathbf{20_{db}}$ as will be discussed hereinafter, or it can displace towards onto the bottom tray conveying system **35**.

The growing tray loading/unloading arrangement is further configured with a growing tray propelling unit configured for ascending bottom duty growing trays $\mathbf{20_{db}}$ from the bottom tray conveying system **35** into the respective growing towers **30**, or for receiving bottom most growing trays $\mathbf{20_i}$ and placing them on the bottom tray conveying system **35** for displacing towards the inlet/outlet port **27** or towards the growing tray lift **45** (with optional treating stops along the path).

The growing tray propelling unit, best seen in **Figs. 13A** and **13B**, comprises a pair of solid bars **212** extending below the horticulture crop growing module **25**, under all the growing towers **30**, with a plurality of pistons **214** (or other mechanical equivalent mechanism) configured under said bars **212** and being manipulable between a contracted position (as seen in the Figs.) and an extended position. The arrangement is such that bottom surface **120** of a bottom transit growing trays $\mathbf{20_b}$ extend above top surface **218** of the bars, whereby manipulating the pistons **214** into the extended position entails vertical deploying of the bottom transit growing trays $\mathbf{20_b}$ into the respective growing towers $\mathbf{30_i}$ to $\mathbf{30_x}$ (providing that the growing tray locking mechanism is at an open position). Likewise, discharging trays from the growing towers $\mathbf{30_i}$ to $\mathbf{30_x}$ onto the bottom tray conveying system **35** takes place by opening/unlocking the growing tray locking mechanism, and allowing the bottom most growing trays $\mathbf{20_i}$ to displace downwardly (under gravity) and come to rest over the conveying belt **102** of the bottom tray conveying system **35**.

The horticulture crop growing module **25** is further configured with an irrigation and draining system. For irrigation, in some embodiments there is an irrigation supply line **220** (best seen in **Fig. 9A**) extending along both sides of the horticulture crop growing module **25** at adjacent a topmost level $\mathbf{20_{xi}}$ of growing trays (11 tiers in the present example), with a plurality of irrigation spouts **226**, each configured for irrigating the soil of an adjacent growing tray. The irrigation regime can be controlled, *i.e.*, whether flood/ drip/ or spray irrigation takes place, or alternatingly.

Irrigation of growing trays $\mathbf{20_i}$ to $\mathbf{20_x}$ within each growing tower $\mathbf{30_i}$ to $\mathbf{30_x}$ takes place by liquid flow between levels/tiers, wherein each bottom growing tray activates to open liquid flow through a valve **64** at a growing tray above it, in a cascade fashion, as discussed by way of example in connection with **Figs. 7B** and **7C**.

The irrigation system further comprises in some embodiments a plurality of drainage containers **240**, each disposed under a respective growing tower **30**, and configured with a valve manipulating arrangement **244** (**Figs. 8A** to **8C**) for draining the bottom most level/tier of growing trays $\mathbf{20_i}$. The valve manipulating arrangement **244** comprises an activating bar **246** mounted over a pair of activators **248** (hydraulic/ pneumatic pistons, solenoids, etc.), with a pair of hollow plungers **250** in register with the valves **64** of the lowest tier of growing trays $\mathbf{20_i/20_b}$, whereupon when the activators **248** are activated by a command signal they propel the bars **246** upwardly into engagement

with the plunger **86** of valves **64**, so as to open the valves to thereby facilitate liquid flow through the hollow plungers **250** and into the drainage containers **240** (as schematically represented by arrowed lines **253**).

In the illustrated example, each growing tower **30** is associated with drainage containers **240**, which in turn comprises a drainage outlet **260**, for collecting all the irrigation liquid and treating it for a new irrigation cycle, *e.g.*, filtering, hydrogenating, enriching with nutrients and minerals, temperature control, disinfecting, etc., from where it is recycled into the irrigation system. However, it is appreciated that rather than a separate drainage container **240** per growing tower **30**, as shown in **Fig. 21A**, there may be an arrangement wherein one or more drainage containers are provided for any two or more growing towers, or a unitary, single drainage container for the horticulture crop growing module **25**, either below the module or a side (as shown in **Fig. 21B**).

In some embodiments the drained irrigation liquid from one or more of the growing towers **30** within the horticulture crop growing module **25** flow by gravity along the growing trays **20** within a growing tower, and after flowing through all growing trays **20** within the tower the irrigation liquid flows to an irrigation liquid treating station, within or outside of the growing module, whereat the irrigation liquid is recycled after analyzing and treating, *i.e.*, cleaned, adding nutrients and minerals, treating water hardness and pH, etc.

The horticulture crop growing module **25** is further configured in some embodiments with several treating stations. For example, as seen in **Figs. 5A** and **5B**, there is a treating station **270** disposed at the distal end of the module, said treating station comprising a dome **272** manipulable by a pair of pistons **276** (or other equivalent mechanism) for displacing between a raised position (as in the drawings) and a lowered position. An inside space (not shown) of the dome **272** is configured with a plurality of nozzles **278z** (seen in **Fig. 25E**) with tubes **278** connected to said nozzles **278z**.

In some embodiments, the arrangement is such that a duty treated growing tray $\mathbf{20_t}$ reaches the treating station **270** *e.g.*, utilizing the bottom tray conveying system **35** as shown in **Figs. 25A** to **25C**, then the dome **272** is lowered to cover the growing tray $\mathbf{20_t}$ and treating agent is applied to the growth by the nozzles, through tubing **278** *e.g.*, as shown in **Figs. 25D** to **25F**. Upon completion of the treatment, the pistons **278** raise the dome **272**, whereby the treated growing tray $\mathbf{20_t}$ moves on (by the bottom tray conveying

system **35**) *e.g.*, to the growing tray lift **45**, as shown in **Figs. 25G-25H** and **25A-25B**, and the treating station **270** is now ready for receiving and treating another growing tray.

It is appreciated that the treating station **270** can provide one or more different treatments, *e.g.*, pollination, disinfection, heating/chilling/airing, poeticizing, etc.

Yet, as best seen in **Fig. 10B**, a treating station, generally designated **284**, is positioned in some embodiments at a distal top location of the horticulture crop growing module **25**, said treating station **284** being static and configured for treating the growing trays as they are discharged from the growing tray lift **45** and collected by the top tray conveying system **48**. Treating station **284** has a dome shape facing the growing trays such that the treat is applied as they reach the top location of the top tray conveying system **48**. The Treating station **284** can be for example a radiation station, sterilization station, etc., and/or it can comprise an imaging unit for obtaining images of the growth of plants on the growing trays.

The horticulture crop growing module **25** is further configured with a control system comprising a controller (**77** in **Fig. 20**), a plurality of sensors and actuators. The controller **77** is configured for controlling the environment within the module and growth treatment (*i.e.*, temperature, humidity, illumination, irrigation, pollination, nutrition, etc.), for detecting and determining and monitoring the growth progress of teach growing tray, and for cycling the growing trays from the time they enter the module, till the time they are discharged, with a growth ready for harvest, as will be discussed hereinafter.

A crop control station **290** is illustrated, by way of example, positioned juxtapose said treating station **284**, as the growing trays discharged from the growing tray lift **45**.

For obtaining data relating to each growing tray individually, each growing tray is configured in some embodiments with a readable identifier (*e.g.*, ID code **20y** in **Fig. 27B**) , such as bar code, QR code, color code, RFID, digital code, etc., whereby tray data associated with each growing tray **20** can be registered at the controller **77**.

Reverting now to the finished produce station **13** (**Fig. 1A**), there is a finished produce conveying system **23** (in fact an extension of conveying system **22**) extending from each of the at least one inlet/outlet ports **27**, configured for carrying growing trays from the one or more horticulture crop growing modules **25** towards the finished produce station **13**. Growing trays **20** received at the finished produce station **13** enter an automated, hands-free handling station wherein the growth (*e.g.*, fruits such as

strawberry) are harvested, then packed and optionally wrapped and stored at appropriate conditions, ready for delivery/shipment.

A horticulture crop growing method using a horticulture crop growing module **25** according to the present disclosure, comprising the following steps:

i. Receiving a plurality of planted growing trays **20** into the horticulture crop growing module **25** through the inlet/outlet port **27** and loading them onto a bottom tray conveying system **35**;

ii. Loading the growing trays **20** from the bottom tray conveying system **35** into the growing towers **30**;

iii. Commencing a growing cycle wherein the growing trays **20** are circulated between a plurality of treating stations **270**, and/or **284**, and/or **290**, disposed within the horticulture crop growing module **25**;

iv. Monitoring and obtaining data associated with each growing tray **20** and relating to ripeness of the crops growing on the growing trays;

v. Repeating steps iii and iv until crops are at harvesting state;

vi. Conveying the growing trays **20** from the growing towers **30** to the inlet/outlet port **27** for collecting the growing trays;

vii. Transporting the trays **20** to the finished produce conveying system **13** *e.g.*, for an automated, hands-free harvesting, packing and delivery station.

With attention to the drawings, reference is made to steps of the horticulture crop growing method utilizing a horticulture crop growing system **10** as described hereinabove, with particular attention to steps ii) to vi) above.

At step (i), after preparation at the growing tray handling and preparation station **12**, a plurality of growing trays **20** are conveyed over conveying system **22** to the inlet port **27** of an allocated horticulture crop growing module **25**, as depicted in stages **(a)** and **(b)** of **Fig. 14**. In stage **(c)**, upon entry into the vicinity of the module **25**, in stage **(d)** the growing trays **20** are placed over the bottom tray conveying system **35** and are gradually displaced (in direction towards the growing tray lift **45**) until the conveyor belt **35** is fully occupied by growing trays **20**. As seen, in some embodiments the growing trays **20** are transferred from the conveying system **22** onto a sliding frame structure **35f** of the bottom tray conveying system **35**, which is described hereinbelow in details with reference to **Figs. 15A to 15D**.

At step (ii), once a duty growing trays **20**$_{db}$ is disposed below each of the growing towers **30**$_{i}$ to **30**$_{x}$, then the growing tray locking mechanism is shifted into an unlocked position by activation motor **201**, entailing retraction of the arresting pins **206A** and **206B** to displace away from one another into an unlocked position, whereafter the growing tray propelling unit is activated by pistons **214** vertically displacing the solid bars **212** upwards, entailing upwards displacement of the duty growing trays **20**$_{db}$ into the respective growing tower **30**$_{i}$ to **30**$_{x}$. Once the duty growing trays **20**$_{db}$ are positioned within the growing tower, the growing tray locking mechanism is activated again, at an opposite sense, whereby the arresting pins **206A** and **206B** displace into arresting engagement within the opening **210** at the growing tray **20**$_{i}$. this step is repeated until the growing towers are loaded with a plurality of growing trays.

A growing cycle then commences (step (iii)), wherein each growing tray receive 'horticulture attention' namely each tray is individually or collectively treated in the respective tower or at dedicated treating stations. Such treating can include any one or more of irrigation, illumination, humidity, air temperature, fertilizing/nutrition, hydrogenation, growing tray heating, radiation at different wavelength, playing sound, pollination, sterilization, etc.

With reference to Fig. **21A** to **21C**, irrigation takes place in some embodiments by applying the irrigation liquid through irrigation supply line(s) **220** to the topmost growing tray **20**$_{xi}$ of each growing tower **30** via one or more nozzles **220z** *e.g.*, in this specific example each topmost growing tray **20** is irrigated by two nozzles **220z**, wherefrom irrigation liquid flows to growing trays **20** below the topmost growing tray at a cascade configuration, by gravity, as demonstrated in **Figs. 21A** and **21B**. Irrigation liquid from the bottom most growing trays drains into the drainage containers **240**, wherefrom it is collected and transferred for treating it towards a new irrigation cycle, *e.g.*, filtering, hydrogenating, enriching with nutrients and minerals, temperature control, disinfecting, etc., from where it is recycled back into the irrigation system.

The growing cycle further comprises circulating the growing trays with the horticulture crop growing module **25**, and in particular shifting the growing trays **20** along the different treating and monitoring stations. Accordingly, at prescribed periods, as controlled by the controller **77** and depending on growth parameters, a growing tray shifting cycle takes place. For that purpose, the bottommost growing tray within each tower **30** is displaced onto the bottom tray conveying system **35** (a tray at a time can

displace onto the bottom tray conveying system **35** owing to controlled operation of the growing tray locking mechanism). And then a tray at a time can be displaced towards the treating station **270** as discussed hereinabove. Once treated, said duty treated growing tray $\mathbf{20_t}$ moves *e.g.*, onto the growing tray lift **45** whereat the trays engage the growing tray support arms **140**, to then be elevated to the top level, for collecting by the top tray conveying system **48**.

Each tray reaching the top level of the growing tray lift **45** is then engaged by the pickup hooks **170** of the endless belts **150**, as explained herein before, and once extending above a respective growing tower the growing tray can be released from the top tray conveying system **48**, allowing it to displace into the growing tower **30** under gravity, to rest over the tray below. Once a growing tray is positioned above another growing tray, the valve and filtration system is activated, as mentioned hereinbefore, facilitating irrigation liquid flow at the cascade-like fashion.

The growing process can be entirely automated and constantly monitored and controlled (step (iv)), wherein each growing tray receives prescribed and monitored amount of treatment. Once the controller identifies that the growth on a tray has reached a so-called ready/maturity stage, the particular tray is displaced to the outlet port **27**. This takes place by identifying the tray (by the readable identifier/ID code **20y**) and once it reached the bottom tray conveying system **35**, the conveyor belt turns at an opposite direction (an unloading direction), displacing said growing tray towards the outlet port.

The control unit **77** is configured in some embodiments to implement some or all of the above-described method step, utilizing sensor units, identifier readers, and various plan treatment and/or monitoring units, as disclosed herein. For example, in some embodiments one or more imagers/cameras are installed in each horticulture crop growing module **25**, and used to control one or more of the following: disease quantification *i.e.*, level of disease in plants; plant healthiness *i.e.*, level of disease in the plant and growing conditions; plant senescence *i.e.*, how the plant ages for adjusting nutrient solution, LED exposure, Temp, Humidity, and suchlike; chlorophyll levels so as to adjust quality of growth *e.g.*, by LED illumination exposure; carotenoid content indicative of level of light absorption.

N-Content, level of nitrogen in the growing media.

Flowering State to start pollination process.

Pollination Control to re pollinate or adjust pollination parameters.

Crop Maturing to start harvesting.

Fig. 15A shows another possible embodiment of the bottom tray conveying system **35**, wherein the growing tray **20** is received in a sliding frame structure **35f** and thereby transported over rails **35r**. As better seen in **Fig. 15C**, the sliding frame structure **35f** comprises an actuator (*e.g.*, linear actuator/motor) **35f** coupled to a gear rack rail **35c** configured to move (*e.g.*, rack-pinion conveyor transmission) the sliding frame structure **35f** over the rails **35r** along the horticulture crop growing module **25**. This way, the growing tray **20** received from the inlet/outlet port **27**, or from the growing tray lift **45**, can be moved to any one of the growing towers **30**, and *vice versa*.

The sliding frame **35f** comprises a lifting mechanism configured to transfer the growing tray **20** from sliding frame **35f** to growing towers **30**, and *vice versa*. The lifting mechanism comprises a lift-platform **35a** on which the growing tray **20** is placed and vertically moved along vertical bars **35b** (*e.g.*, by linear actuation) of the sliding frame **35f**. **Fig. 15B** demonstrates vertical movement of the growing tray **20** by the lift-platform **35a** in growing tower **30**, and securing/releasing the bottommost growing tray **20** in the growing tower **30** by a locking mechanism **29** *e.g.*, four locking mechanisms **29** for securing the growing tray **20** in each growing tower **30** are exemplified here.

For example, the lift-platform **35a** can lift the growing tray **20** placed thereon upwardly towards and along the support frame **180** of the growing tower **30**, thereby pushing the bottommost growing tray $\mathbf{20_i}$ of the growing tower **30**, and any other growing tray **20** stacked thereon, upwardly. After the growing tray **20** placed on the lifting platform **35a** reaches the bottommost tray-location in the growing tower **30**, the locking (*e.g.*, spring) mechanisms **29** mounted to the support frame **180** are changed from an unlocked state into their locked state by pushing a locking pin **29p** thereof into the securing openings **210** of the growing tray **20**. Once the growing tray **20** is securely locked in the bottommost tray-location of the growing tower **30** by the locking mechanism **29**, the lifting platform **35a** is moved downwardly back to the bottom base/floor of the sliding frame **35f**.

Figs. 15C and **15D** illustrate growing tray **20** displacement by the lifting mechanism, and utilizing a lock manipulator (*e.g.*, piston mechanism) **29a** mounted on support elements **35s** vertically upwardly extending from the sliding frame **35f**. Each lock manipulator **29a** is configured to engage a respective locking mechanism **29** of the

growing tower **30** and (*e.g.*, mechanically, magnetically, electrically)manipulate it to change the locking pin **29p** between the released and locked states.

Figs.16A to **16E** illustrate a crop growing module **25** population sequence according utilizing the bottom tray conveying system **35** of **Figs. 15A** to **15D**. In **Fig. 16A** the growing towers **30** of the crop growing module **25** are all empty, and a first growing tray **20** is introduced into the crop growing module **25** *e.g.*, via its inlet/outlet port **27**, and loaded onto the sliding frame **35f** of the bottom tray conveying system **35**. In **Fig. 16B** the sliding frame **35f** is moved to a selected one of the growing towers **20**, and its lock manipulators **29a** are engaged with their respective locking mechanisms **29** of the growing tower **30** and operated for moving the respective locking pins **29p** into their released state.

In **Fig. 16C** the lift-platform **35a** is moved vertically along the vertical bars **35b** of the sliding frame **35f** to translate the growing tray **20** into the bottommost tray-location of the growing tower **30**, whereupon the lock manipulators **29a** are operated again to cause their respective locking mechanisms **29** to move the locking pins **29p** into their locked states, thereby securing the growing tray **20** at the bottommost tray-location of the growing tower **30**. In **Fig. 16D** the flit platform **35a** is moved vertically downwardly to the base of the sliding frame **35f**.

In **Fig. 16E** a new growing frame $\mathbf{20_i}$ is introduced onto the sliding frame **35f** *e.g.*, via its inlet/outlet port **27**, and lifted vertically upwardly by the lift platform **35a** into the growing tower **30** after its lock manipulators **29a** are operated for changing the respective locking pins **29p** into their released state. As the new growing tray $\mathbf{20_i}$ is moved upwardly in the growing tower **30** is pushes the bottommost growing tray **20**, and any other growing tray **20** stacked thereon, upwardly along the growing tower. When the new growing tray $\mathbf{20_i}$ is positioned in the bottommost tray-location in the growing tower **30**, its lock manipulators **29a** are operated for changing the respective locking pins **29p** into their locked states, whereafter the lift platform **35a** is moved back downwardly to the base of the sliding frame.

The growing tray population sequence demonstrated in **Figs. 16A** to **16E** can be repeated any number of times to introduce new growing trays to selected growing towers **30** of the crop growing module **25**, until allocated tray-locations of the growing towers **30** are fully/partially populated. After the crop growing module **25** is fully/partially populated with growing trays **20** growing cycle can be commenced, as disclosed herein.

Figs. 17A to **17D** exemplify a growing tray **20** unloading sequence according to possible embodiments. In **Fig. 17A** the sliding frame **35f** is moved over the rails **35r** to a selected one of the growing towers **30**, and its lock manipulators **29a** are engaged with the respective locking mechanisms **29** of the growing tower **30**. In **Fig. 17B** the lift platform **35a** is moved vertically upwardly until it reaches the growing tray $\mathbf{20}_i$ at the bottommost tray-location in the growing tower **30**, whereupon its lock manipulators **29a** are operated for changing the respective locking pins **29p** into their released states for releasing the growing tray $\mathbf{20}_i$ onto the lift platform **35a**. In **Fig. 17c** the lift platform **35a** is moved downwardly back to the base of the sliding frame **35f**, thereby translating the growing tray placed thereon into the sliding frame, and causing all other growing trays stacked thereon to move one level downwardly. This way, when a growing tray **20** from an upper level of the growing tower **30** reached the bottommost tray-location, the lock manipulators **29a** are operated again for changing the respective locking pins **29p** into their locked states, thereby the securing the growing tray **20** descending from the upper level in the bottommost tray-location of the growing tower **30**.

Figs. 18A to **18C** illustrate a top tray conveying system **48** according to some possible embodiments. The top tray conveying system **48** comprises elongated rails **48r** extending above and along the horticulture crop growing module **25**, a motor transmission unit **48m** coupled for revolving a (*e.g.*, timing) endless belt **48e** passing along or inside the elongated rails **48r**, and a tray carrier assembly **48f** coupled to the endless belt **48e** via one or more support elements **48s**, so as to translate the tray carrier assembly **48f** along the elongated rails **48r**. This way the tray carrier assembly **48f** can be moved to one end of the elongated rails **48r** to receive/transfer a growing tray **20** from/to the growing tray lift **45**, and therefrom to any one of the growing towers **30** of the horticulture crop growing module **25** to transfer/receive growing tray **20**. In some embodiments one or more plant treatment and/or monitoring stations are located above at least some of the growing towers **30**, and top tray conveying system **48** is utilized to transfer growing trays from the growing tray lift **45**, or from one of the growing towers **30**, to the treatment and/or monitoring stations for thereby applying one or more treatments and/or monitoring.

The tray carrier assembly **48f** comprises one or more carrier bars **48b** (two in this specific example) coupled to the support elements **48s** for moving the tray carrier assembly **48f** along the elongated rails **48r**, two pairs of linear guides **48g** extending downwardly from the end portions of the carrier bars **48b**, and a tray slider mechanism

48q movable located between each pair of linear guides **48g**. The tray slider mechanism **48q** is configured to grip and hold a growing tray **20** and controllably slide the growing tray **20** thereby gripped along the pair of linear guides **48g**, for moving the growing tray **20** downwardly or upwardly to/from a selected one of the growing tower **30** or the support arms **140** of the growing tray lift **45**, or for approaching and gripping a topmost growing tray **20** in one of growing towers and moving it therefrom upwardly *e.g.*, for transfer by growing tray lift **45** or to another one of the growing towers **30**, or for applying one or more treatments and/or monitoring in one or more of the treatment/monitoring stations.

In this configuration the frame **70** of the growing tray **20** comprises one or more gripping holes **70c** *e.g.*, two gripping holes **70c** formed in the upper portion of the frame **70**, configured to receive respective gripping arms **48x** of the tray slider mechanism **48q** for gripping and moving the same. **Figs. 18D** to **18F** illustrates a growing tray transfer sequence carried out utilizing the top tray conveying system **48**. In **Fig. 18D** the tray carrier assembly **48f** loaded with a growing tray **20** gripped by its tray slider mechanism **48q** for moving the tray **20** to a selected one of the growing towers **30** *e.g.*, fetched from another one of the growing towers **30** or from the growing tray lift **45**.

In **Fig. 18E** the growing tray **20** is moved downwardly *e.g.*, by lifter-cables **48y** coupled to the tray slider mechanism **48q**, so as to engage the growing tray **20** for sliding motion with guiding channels (not shown) of the support frame **180** of the growing tower **30** *e.g.*, utilizing the sliding pins **20k** shown in **Fig. 22B**. This way, the growing tray **20** is slid downwardly along the support frame **180** of the growing tower **30** until it abuts another growing tray **20**, typically locating the slid growing tray at the topmost tray-location of the growing tower **30**. After the growing tray **20** is positioned in the growing tower **30** the gripping arms **48x** are changed from a tray gripping state into their tray released state *e.g.*, they are moved one with respect to/towards the other, such that gripping tips/fingers thereof can be released from the gripping holes **70c** of the growing tray **20**. After changing the gripping arms **48x** into their tray released state, the tray slider mechanism **48q** is retracted upwardly *e.g.*, by the lifter-cables **48y**, back to its undeployed state adjacent to the carrier bars **48b**, as shown in **Fig. 18E**.

Figs. 19A to **19K** demonstrate growing tray loading sequence utilizing according to some embodiments the top tray conveying system **48**. **Fig.19A** depicts a horticulture crop growing module **25** of some possible embodiments, before introducing any growing trays **20** into its growing towers **30**. The sliding frame **35f** of the bottom tray conveying

system **35** is seen loaded with a growing tray **20** *e.g.*, received via the tray inlet/outlet port **27**. In **Fig. 19B** the sliding frame **35f** is moved over the rails **35r** of the bottom tray conveying system **35** towards the growing tray lift **45**, and in **Fig. 19C** the growing tray **20** is transferred from the sliding frame **35f** of the bottom tray conveying system **35** to the growing tray support arm **140** of the growing tray lift **45**. In **Fig. 19D** the growing tray lift **45** moves the growing tray **20** upwardly towards the top tray conveying system **48**, in **Fig. 19E** the tray carrier assembly **48f** of the top tray conveying system **48** is moved over the rails top **48r** towards the growing tray lift **45**, and in **Fig. 19F** the growing tray **20** is engaged by the tray carrier assembly **48f**.

In **Fig. 19G** the tray slider mechanism **48q** is moved down to engage the gripping holes **70c** with the gripping tips/fingers of its gripping arms **48x**, which are then changed into their gripping state *e.g.*, by moving them one away from the other, to thereby provide a grip over the growing tray **20**. In **Fig. 16H** the tray carrier assembly **48f** is moved over the top rails **48r** with the gripped growing tray **20** to a selected one of the growing towers **30**. In **Fig. 19I** the gripped growing tray **20** is moved downwardly/lowered by the tray slider mechanism **48q** *e.g.*, by the lifter-cables **48y**, along the guiding channels (not shown) of the support frame **180** of the tower, to an allocated location in the growing tower **30**, which in this example is the bottommost tray-location of the tower **30**. The growing tray **20** can be then secured to the support frame **180** by the locking pins **29p** of the locking mechanism **29**, and the gripping arms **48x** of the tray slider mechanism **48q** can be changed from their tray gripping state into their tray released state for lifting the tray slider mechanism **48q** upwardly back to its undeployed state.

Fig. 19K depicts placement of a new growing tray **20** in the horticulture crop growing module **25** after carrying out the steps illustrated in **Figs. 19A** to **19H**. As seen, the new growing tray **20** is gripped by the tray slider mechanism **48q** and lowered/moved downwardly *e.g.*, by the lifter-cables **48y**, along the guiding channels (not shown) of the support frame **180** of the tower, to an allocated location in the growing tower **30**, which in this example is the tray-location above the bottommost tray-location of the tower **30**. The growing tray **20** can be then secured to the support frame **180** by the locking pins **29p** of the locking mechanism **29**, and the gripping arms **48x** of the tray slider mechanism **48q** can be changed from their tray gripping state into their tray released state for lifting the tray slider mechanism **48q** upwardly back to its undeployed state. As shown in **Fig.**

19K, the steps illustrated in **Figs. 19A** to **19I** can be repeated any number of time for at least partially filling at least one, or all, of the growing towers **30**.

Fig. 20 illustrates plants growing arrangement **20g** according to some possible embodiments. In some embodiments each horticulture crop growing module **25** is configured to form a tray cultivation cycle **20u** implemented utilizing the bottom tray conveying system **35**, the growing tray lift **45**, the top tray conveying system **48**, and the vertical growing tray translation mechanism implemented in each of the growing towers **30**. For example, the tray cultivation cycle **20u** comprises in some embodiments a pollination station **20p** (*e.g.*, such described herein with reference to **Figs. 25A** to **25H**), and/or irrigation station **20i** (*e.g.*, such described herein with reference to **Figs. 22A** to **22D**), and/or a sterilization station **20s** (*e.g.*, a radiation station as described hereinabove), and/or a crop control/monitoring station **20c** (*e.g.*, such described herein with reference to **Figs. 27A** and **27B**), and/or a lighting arraignment **20h** *e.g.*, wherein one or light emitters **188** are arranged at each tray-location of the growing towers **30**, such as described hereabove, which may be arranged in any suitable order.

As also seen in **Fig. 20**, in some embodiments each tray-location in each growing tower **30** comprises one or more treating members **188**. In this specific example each tray-location includes two such treating members **188**, used to irradiate the plants with emitted light (*e.g.*, using light emitting diodes – LEDs) and/or ventilate the plants in each growing tray **20**, as will described hereinbelow with reference to **Figs. 24A** to **24D**.

In possible embodiments the irrigation arrangement illustrated in **Figs. 22A** to **22D** is utilized to individually irrigate the growing trays **20**, one at a time, in the irrigation station **20i**. For this purpose, in some embodiments the growing tray **20** comprises one or more perforated liquid troughs element **20v** (*e.g.*, a single trough **20v** is shown in this example) extending along a length of the growing tray **20** *e.g.*, attached by support element **20w** to the frames **70** of the growing tray **20**, and one or more liquid tubes **20j** (*e.g.*, a single tube **20j** is shown in this example) extending downwardly from a liquid inlet port **20n** formed in the upper side of the frame **70** towards the perforated liquid trough element **20v**. The liquid tube **20j** is configured to receive irrigation liquids via liquid inlet port **20n** and stream the same by gravitation to the perforated liquid trough element **20v**, wherefrom the streamed irrigation liquids are sprinkled onto the plants via the perforations **20z**.

As seen in **Figs. 22C** to **22H**, the irrigation station **20i** is configured in some embodiments to receive a growing tray **20** from selected one or more growing towers **30**, via the bottom tray conveying system **35**. The sliding frame **35f** retrieves a growing tray **20** from the growing tower **30**, and transfers it to a tray support arm **140** of the tray lift **45**, wherein a liquid supply pipe **24p** is fluidly coupled to the liquid inlet port **20n** of the growing tray **20**, and a liquid drain pipe **24b** is fluidly coupled to the normally closed valve **64** of the growing tray **20** via an interfacing funnel element **24f**, thereby changing the normally closed valve **64** into its opened state. This way, while irrigation liquids are supplied by the liquid supply pipe **24p** to the perforated trough **20v** and sprinkled on the plants via the perforations **20z**, residual irrigation liquids accumulated inside the tray-like portion **60** of the growing tray **20** are drained via the liquid drain pipe **24b** into the drainage container **240**.

After supplying a certain amount of the irrigation liquids to the growing tray **20**, the liquid supply pipe **24p** and the liquid drain pipe **24b** are removed/retracted and the growing tray **20** is moved back to an allocated location in one of the growing towers **30** *e.g.*, by lifting it by the tray lift **45** to the top tray conveying system **48** for lowering the growing tray **20** into a selected one of the growing towers **30**, or by transferring it back to the sliding frame **35f** and lifting it into a selected one of the growing towers **30**.

Figs. 23A to **23C** show a draining arrangement **28** usable in some embodiments for removal of residual irrigation liquids accumulated inside the tray-like portion **60** of the growing tray **20**. The draining arrangement **28** comprises a tilting element **28a** configured to apply a predefined tilt angle to the growing tray **20**, after the irrigation liquid supply is stopped, in order to drain the residual liquids accumulated inside the tray-like portion **60** towards the normally closed valve **64**. Optionally, but is some embodiments preferably, a normally open valve is provided at the irrigation outlet port of the growing trays, or alternatively, the irrigation outlet port is provided without any valve, such that the residual irrigation liquids accumulated in the growing tray are drained therefrom in a continuous and uninterrupted manner.

Figs. 24A to **24D** show a system ventilation arrangement **33a** used in possible embodiments to stream gas/air onto growing trays **20** of the horticulture crop growing module **25**. In this embodiment, the tray-locations of each growing tower **30** comprise one or more gas/air distribution pipes **33** having a plurality of gas/air outlets **33t** for streaming gas/air onto the plants in the growing trays **20**. The ventilation arrangement

33a comprises in some embodiments one or more main gas/air ducts **33d** from which a plurality of the gas/air distribution pipes **33** extend towards the growing trays **30**. In this specific example there are main gas/air ducts **33d** mounted at lateral sides of the horticulture crop growing module **25**,and the gas/air distribution pipes **33** are alternatingly distributed from the main gas/air ducts **33d** at each side of the growing towers **30**. The main gas/air ducts **33d** are configured to received gas/air streamed thereto via a gas/air inlet(s) **33i**, and use gas/air ducting transition elements **33t** for streaming of the gas/air .

Fig. 26 shows an environment control arrangement **26a** of possible embodiments, comprising one or more heating, ventilation, and air conditioning (HVAC) units **k1** configured to control the temperature in the system, and/or one or more dehumidifier units **k2** configured to control the humidity unit eh system, and/or one or more blower circulation fans **k3** for circulating fresh air through the system, and/or one or more light emitting (*e.g.*, LED) units **k4** for providing artificial pant growth illumination, and/or one or irrigation unit **k5** configured to mix irrigation solutions and optionally also integrates measurement data obtained from sensor devices indicative of acidity, and/or electrical conductivity, and/or temperature of the irrigation solutions. The control unit **77** is configured in some embodiments to process analyze the measurement data from the various sensors and based thereon control/regulate operation each of the **k1** to **k5** units.

Figs. 27A and **27B** demonstrate crop monitoring/control arrangement **27a** of possible embodiments, utilizing a plurality of tray tracing zones within the horticulture crop growing module **25**. In some embodiments each one of the growing trays **20** includes a unique readable identifier (*e.g.*, a Datamatrix identification code) **20y**. The tray identifier **20y** is used by the system to record information/measurement data from the sensors, in association with each plant in the horticulture crop growing module **25**.

In some embodiment the horticulture crop growing module **25** comprises a tray identification zone **c1** at the sterilization **20s** and/or the crop control **20c** stations to record information (*e.g.*, ID, date, time, sterilization and crop control) for growing strays **20** undergoing sterilization/crop control, and/or at a top tray passage zones **c2** above/adjacent each growing tower **30** to record information (*e.g.*, ID, date, time, tower ID) for each growing tray **20** transported to/from the growing towers **30**, and/or at the tray entry zone **c3** near/at the inlet/outlet port **27** for identification of growing trays loaded into the system and unloaded therefrom, and/or **c4** at/near entrant to the pollination station **20p** and/or the

irrigation station for recording of information (*e.g.*, ID, date, time, pollination/irrigation) for the growing trays **20** undergoing pollination/irrigation processes.

The control unit **77** can be configured to collect and record the tray identification information for the various tray identification zones **c1**,...,**c4** for each growing tray **20** transported in the system in association with certain conditions/properties, such as: light exposure time duration; nutrients; sterilization; pollination, optionally together with an input about the type of produce, seed type or mother plant. The collected data can be processed and analyzed to generate standard growing profiles that can be utilized to determine optimal growing conditions for the system.

This tray identification/traceability arrangement **27a** of each growing tray **20** transported in the system can be used by the control unit **77** to determine individual growing condition/profile for each growing tray **20** *e.g.*, growing tower location, faster/slower movement speeds within the system, etc.

As described hereinabove and shown in the associated figures, the present disclosure provides a greenhouse and horticulture system for automated plants growth facilities and related methods. While particular embodiments of the invention have been described, it will be understood, however, that the invention is not limited thereto, since modifications may be made by those skilled in the art, particularly in light of the foregoing teachings. As will be appreciated by the skilled person, the invention can be carried out in a great variety of ways, employing more than one technique from those described above, all without exceeding the scope of the claims.

CLAIMS:

1. An automated horticulture crop growing system, comprising:

a growing tray preparation station wherein a plurality of growing trays are pre-treated, filled with a growing bed and planted;

a growing tray displacing system for transferring planted growing trays from the growing tray preparation station to a horticulture crop growing facility;

the horticulture crop growing facility comprises a closed structure with a controlled environment treating system, one or more growing tray inlet/outlet ports, and one or more horticulture crop growing modules;

said horticulture crop growing module comprising:

a plurality of parallelly disposed single-rowed growing towers, each of said plurality of parallelly disposed single-rowed growing towers configured to receive vertically supported growing trays and to vertically move said growing trays along and within said single-rowed growing tower for transferring them between tray locations therewithin;

a growing tray manipulation system comprising one or both of a top tray conveying system for loading or unloading growing trays from a top end of each growing tower, and a bottom tray conveying system for loading or unloading growing trays from a bottom end of each growing tower,

said growing tray manipulation system configured for:

receiving from said growing tray displacing system planted growing trays via the growing tray inlet/outlet port and loading them to allocated growing towers of said horticulture crop growing module;

displacing the growing trays between the allocated growing towers to treating stations within the horticulture crop growing module; and

unloading the growing trays by displacing them out of said horticulture crop growing facility through the growing tray inlet/outlet port.

2. The automated horticulture crop growing system of claim 1, further comprising a finished produce station configured for receiving growing trays from the horticulture crop growing modules, whereat growth is harvested, packed and stored at appropriate conditions, ready for delivery/shipment, at an automated, hands-free handling station.

3. A horticulture crop growing facility comprising a closed structure with a controlled environment treating system and having one or more growing tray inlet/outlet ports, and one or more horticulture crop growing modules; each horticulture crop growing module comprising a plurality of parallelly disposed single-rowed growing towers, each of said plurality of single-rowed towers configured to receive an array of vertically supported growing trays and to vertically move said growing trays along said single-rowed tower, a growing tray manipulation system comprising one or both of a top tray conveying system and a bottom tray conveying system, said growing tray manipulation system configured for receiving planted growing trays via the growing tray inlet/outlet port and loading them to allocated growing towers of said horticulture crop growing module, displacing the growing trays through treating stations within the horticulture crop growing module, and for displacing the growing trays out of said horticulture crop growing facility through the growing tray inlet/outlet port.

4. A horticulture crop growing module comprising a closed structure with a controlled environment treating system, and one or more growing tray inlet/outlet ports; each horticulture crop growing module comprising a plurality of parallelly disposed single-rowed growing towers, each of said plurality of single-rowed towers configured to receive an array of vertically supported growing trays and to vertically move said growing trays along said single-rowed tower, a growing tray manipulation system comprising one or both of a top tray conveying system extending above the growing towers and a bottom tray conveying system extending below the growing towers, said growing tray manipulation system configured for receiving planted growing trays via the growing tray inlet/outlet port and loading them to allocated growing towers of said horticulture crop growing module, displacing the growing trays through treating stations within the horticulture crop growing module, and for displacing the growing trays out of said horticulture crop growing facility through the growing tray inlet/outlet port.

5. The horticulture crop growing module of claim 4, configured to autonomously introduce a plurality of growing trays through the growing tray inlet/outlet port into said horticulture crop growing module, automatically load said plurality of growing trays into the growing towers, and displace one or more of the growing trays along a treating path whereby the growing tray undergoes a treatment at treating stations extending along said a treating path; whereby when the crops are ready for harvesting the growing trays are

autonomously transferred from the horticulture crop growing module through the inlet/outlet port.

6. The horticulture crop growing module of claim 5, wherein the treating stations are configured to apply one or more treatments along the treating path for promoting and enhancing growth of the crops.

7. The horticulture crop growing module of any one of claims 4 to 6, wherein the treating stations include any one or more of irrigation, illumination, humidity, air temperature, fertilizing/nutrition, hydrogenation, growing tray heating, radiation at different wavelength, playing sound, pollination, sterilization.

8. The horticulture crop growing module of any one of claims 4 to 7, wherein the horticulture crop growing module is configured with an Artificial Intelligence (AI) system comprising a plurality of sensors distributed within the horticulture crop growing module along the treating path and configured for obtaining parameter signals associated with a growing cycle of the crops and with a position and state of the growing trays and treating stations; and a controller configured for receiving and processing the parameter signals and generating operation signals responsive thereto, for controlling operation of the treating stations and automatic displacement of the growing trays along the growing path.

9. The horticulture crop growing module of claim 8, wherein the sensors of the AI system comprise any one or more of imaging sensors, temperature sensors, sugar content analyzer, humidity sensors, chemical condition and/or property sensors.

10. The horticulture crop growing module of any one of claims 4 to 9, wherein the growing tray manipulation system comprising a growing tray lift configured for receiving the growing trays from the bottom tray conveying system and transporting them to the top tray conveying system.

11. The horticulture crop growing module of claim 10, wherein each one or more of the bottom tray conveying system, and the growing tray lift, and the top tray conveying system, can further be configured for conveying the growing trays to one or more of the treating stations.

12. The horticulture crop growing module of claim 10 or 11, wherein each of the bottom tray conveying system, and the growing tray lift, and the top tray conveying system can be used for conveying growing trays at either direction.

13. The horticulture crop growing module of any one of claims 4 to 12, wherein the growing towers are each configured with a growing tray support system, for retaining the growing trays vertically aligned wherein a duty, bottom most growing tray, is arrested by a tray arresting mechanism at a bottom portion of the support system, and wherein each consecutive growing tray is supported over another growing tray, readily displaceable to move along the growing tower.

14. The horticulture crop growing module of any one of claims 4 to 13, comprising an illumination system configured for illuminating the growing trays.

15. The horticulture crop growing module of any one of claims 4 to 14, wherein each growing tower comprises tray support rails defining a sliding path, wherein trays within a growing tower are slidingly displaceable there along, owing to gravitational force.

16. The horticulture crop growing module of any one of claims 4 to 15, wherein irrigation is applied to the growing trays at a cascade configuration, wherein irrigation is applied to top growing trays within the growing tower, and irrigation liquid flows to growing trays below one another by gravitation.

17. The horticulture crop growing module of any one of claims 4 to 16, wherein the growing trays are configured with an irrigation inlet port disposed at a top portion thereof, and an irrigation outlet port disposed at a bottom portion thereof so as to define an irrigation flow path extending between said ports.

18. The horticulture crop growing module of claim 17, wherein the irrigation outlet port of the growing trays comprises a normally closed valve configured for opening by a valve opening member configured at an inlet port of a neighboring bottom growing tray, only upon stacking the growing trays on top of one another.

19. The horticulture crop growing module of claim 17 or 18, wherein one or both of the irrigation inlet port and the irrigation outlet port are configured with a filtering arrangement.

20. The horticulture crop growing module of any one of claims 17 to 19, wherein a bottommost growing tray within a growing tower is selectively engaged by a valve opening mechanism configured for opening the valve of the irrigation outlet port of said bottommost growing tray when disposed over said valve opening mechanism.

21. The horticulture crop growing module of any one of claims 17 to 20 wherein the growing trays comprise a perforated trough element configured to sprinkle irrigation liquids received from the irrigation inlet port.

22. The horticulture crop growing module of any one of claims 17 to 21 comprising an irrigation station configured to supply irrigation liquids to growing trays introduced thereinto via their irrigation inlet port.

23. The horticulture crop growing module of claim 22, wherein the irrigation station is configured to drain residual irrigation liquids accumulated in the growing trays via their irrigation outlet port.

24. The horticulture crop growing module of claim 23, wherein the irrigation station comprises a tilting mechanism configured to drain the residual liquids.

25. The horticulture crop growing module of any one of claims 4 to 24, wherein a valve is associated with a filtering arrangement, whereby liquid arriving at the valve is filtered.

26. The horticulture crop growing module of any one of claims 4 to 25, wherein a bottommost growing tray within a growing tower is disposed over a drainage container, and wherein a valve opening mechanism is configured for opening the valve of the irrigation outlet port of said bottommost growing tray when disposed over said drainage container.

27. The horticulture crop growing module of claim 26, configured for treating irrigation liquid and for recycling the irrigation liquid.

28. The horticulture crop growing module of claim 26 or 27, wherein drainage containers are in flow communication with one another, or a common drainage container is configured for two or more growing towers of the horticulture crop growing module.

29. The horticulture crop growing module of any one of claims 4 to 28, wherein drained irrigation liquid from one or more of the growing towers within the horticulture crop growing module is directly collected to an external irrigation liquid treating station.

30. The horticulture crop growing module of any one of claims 4 to 28, wherein drained irrigation liquid from one or more of the growing towers within the horticulture crop growing module flow by gravity along growing trays within a growing tower, and after flowing through all growing trays within the tower the irrigation liquid flows to an irrigation liquid treating station, within or outside of the growing module, whereat the irrigation liquid is recycled after analyzing and treating the irrigation liquid.

31. The horticulture crop growing module of any one of claims 4 to 30, wherein the growing towers are configured for accommodating a vertical stack of growing trays, supported between side bars, wherein a bottom most growing tray is arrestable by a tray

arresting mechanism, wherein consecutive growing trays are disposed on top of one another, whereby disengaging the bottom most tray from the tray arresting mechanism facilitates loading of the bottom most tray onto the bottom tray conveying system, and further entailing downward shifting of the growing trays within the growing tower, under force of gravity.

32. The horticulture crop growing module of any one of claims 4 to 31, wherein the bottom tray conveying system comprises a pair of conveyor chains disposed parallelly and configured for bearing opposite sides of a bottom surface of the growing trays.

33. The horticulture crop growing module of any one of claims 4 to 32, wherein a tray arresting mechanism is configured at a bottom portion of the growing tower, said tray arresting mechanism is manipulable between a normally tray arresting position, wherein one or more obstructing elements project to secure a bottommost growing tray to said growing tower, and a disengaged position wherein the one or more obstructing elements are contracted to release a bottommost growing tray from said growing tower.

34. The horticulture crop growing module of claim 33, wherein the tray arresting mechanism of the growing towers is configured for simultaneous operating, whereby all tray arresting mechanisms within the horticulture crop growing module simultaneously shift between their respective tray arresting position and disengaged position, or configured to shift upon a command signal received from a controller, wherein any one or more tray arresting mechanism can be individually operated.

35. The horticulture crop growing module of claim 33 or 34, wherein the tray arresting mechanism comprises an activating rod rotatably secured at a bottom portion of the horticulture crop growing module and configured with threaded portions disposed adjacent each growing tower; a plurality of threaded riders, at least one associated with each growing tower; each rider engaged over each threaded portion and restrained for axial displacement along the activating rod; and wherein each rider comprises a tray engaging member; whereby rotating the threaded rod in one direction entails simultaneous axial displacement of the riders for shifting the tray arresting mechanisms into their tray arresting position, and rotating the threaded rod in an opposite direction entails simultaneous axial displacement of the riders for shifting the tray arresting mechanisms into their disengaged position.

36. The horticulture crop growing module of claim 35, wherein the tray engaging member is a pin projecting from the rider and configured for arresting within an opening of the bottom most tray.

37. The horticulture crop growing module of any one of claims 33 to 36, wherein the tray arresting mechanism comprises a pair of facing pins, whereby at the tray arresting position said pins displace towards one another, and at the disengaged position said pins displace away from one another.

38. The horticulture crop growing module of claim 33 or 34, wherein the bottom tray conveying system comprises one or more rails extending below the growing towers, and a frame structure configured to move along said one or more rails and transfer or receive a growing tray from a selected one of the growing towers.

39. The horticulture crop growing module of claim 38 wherein the frame structure comprises a manipulator unit configured to engage the tray arresting mechanism of the growing tower and controllably change it between the tray arresting position and the disengaged position.

40. The horticulture crop growing module of claim 38 or 39 wherein the frame structure comprises a lift assembly configured to transfer a growing tray thereby carried to the growing tower, or receive a growing tray from the growing tower.

41. The horticulture crop growing module of claim 40 configured to change the tray arresting mechanism to its disengaged position when transferring the growing tray to the growing tower, and thereafter to change the tray arresting mechanism back to its tray arresting position for securing the transferred growing tray in a bottommost tray-location of said growing tower.

42. The horticulture crop growing module of claim 40 or 41 configured to change the tray arresting mechanism to its disengaged position when receiving the growing tray from the growing tower, and thereafter to change the tray arresting mechanism back to its tray arresting position for securing a downwardly translated growing tray in a bottommost tray-location of said tower.

43. The horticulture crop growing module of any one of claims 4 to 42, wherein the growing trays are solid trays made of metal or plastic material, having a flat growing portion and two parallel upright side frames disposed at opposite side ends of the tray, wherein growing trays within a growing tower are configured such that a bottom surface of a top growing tray bears over the side frames of a neighboring bottom growing tray.

44. The horticulture crop growing module of claim 43, wherein a valve opening member is configured at an upright side frame of the neighboring bottom growing tray, for opening normally closed valve at a top growing tray.

45. The horticulture crop growing module of claim 43 or 44, wherein the growing trays are engaged by a growing tray lift at a bottom of the trays or at the upright frame thereof.

46. The horticulture crop growing module of any one of claims 43 to 45, wherein the upright side frames of the growing trays are configured with an engaging recess, and the top tray conveying system is configured with two side rails accommodating one or more pickup hooks, displaceable along the side rails, and configured for selective arresting with said engaging recesses.

47. The horticulture crop growing module of claim 46, wherein the two side rails of the top tray conveying system are fixed over the growing towers within the horticulture crop growing module, wherein engaging with one or more trays takes place upon displacing growing trays upwards towards said side rails.

48. The horticulture crop growing module of any one of claims 4 to 37 and 43 to 47, further comprising a growing tray propelling unit configured for ascending and descending a bottom duty growing trays from a bottom tray conveying system into and from a respective growing tower.

49. The horticulture crop growing module of any one of claims 10 to 12, wherein the top tray conveying system is fitted also for conveying growing trays to an and from an inlet/outlet port.

50. The horticulture crop growing module of any one of claims 4 to 49, being received within a closed, treated environment location.

51. The horticulture crop growing module of any one of claims 4 to 50, wherein a light illuminating source is associated with each growing tray within the growing tower.

52. The horticulture crop growing module of claim 51, wherein the light illuminating source is disposed on tray support rails of the growing tower, and/or at a bottom face of the growing trays.

53. The horticulture crop growing module of any one of claims 4 to 52, wherein each growing tray is configured with a readable identifier, whereby tray data associated with each growing tray can be registered at a controller of the horticulture crop growing module.

54. The horticulture crop growing module of any one of claims 4 to 53, being configured as an autonomous growing module, independent of other growing modules, and being self-supplied with all the necessary elements for obtaining a growing cycle, including an inlet/outlet port and a confined controlled environment.

55. A horticulture crop growing method, used in conjunction with a horticulture crop growing module according to any one of claims 4 to 54, comprising the following steps:

vii. receiving a plurality of planted growing trays into the horticulture crop growing module through the inlet/outlet port and transporting them by the bottom tray conveying system;

viii. loading the growing trays from the bottom tray conveying system into the growing towers;

ix. commencing a growing cycle wherein the growing trays are circulated between a plurality of treating stations disposed within the horticulture crop growing module;

x. monitoring and obtaining data associated with each growing tray and relating to ripeness of the crops growing on the growing trays;

xi. repeating steps iii and iv until crops are at harvesting state;

xii. conveying the growing trays from the growing towers to the inlet/outlet port for collecting the growing trays.

56. A horticulture crop growing method according to claim 55, wherein prior to a growth cycle, the growing trays and the horticulture crop growing facility are pre-treated at growing tray preparation station, to disinfect the vicinity and gear.

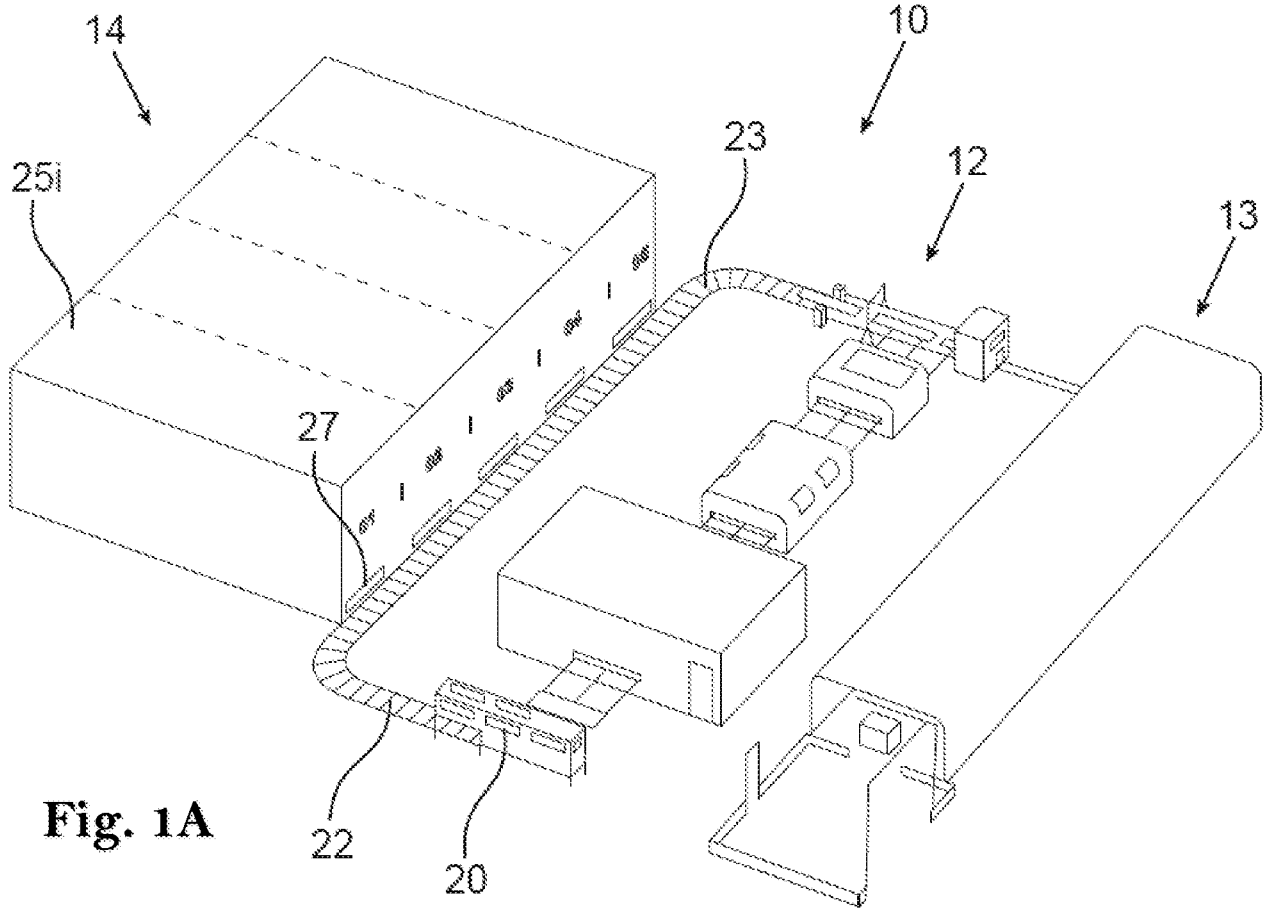
14
10
23
12
13
25i
27
22
20

Fig. 1A

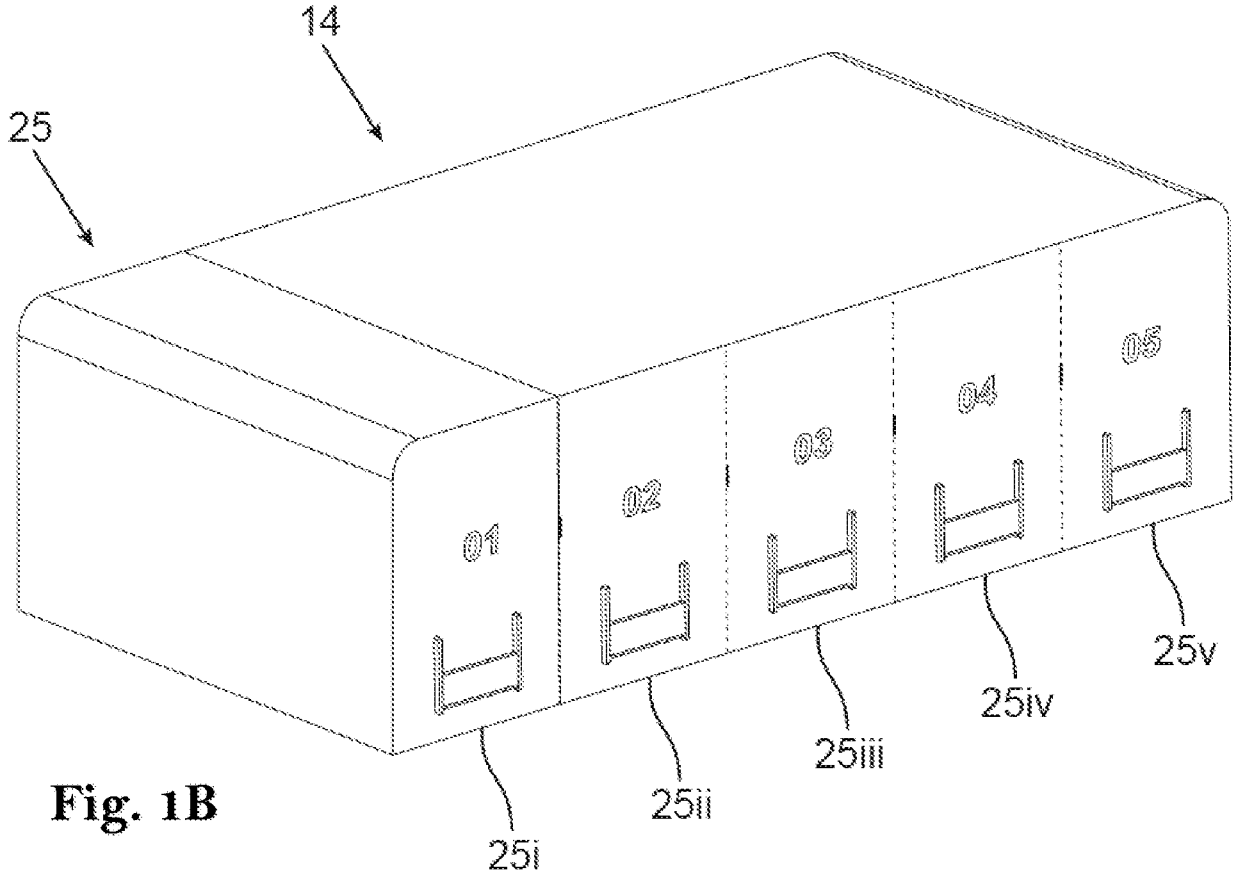
14
25
01
02
03
04
05
25i
25ii
25iii
25iv
25v

Fig. 1B

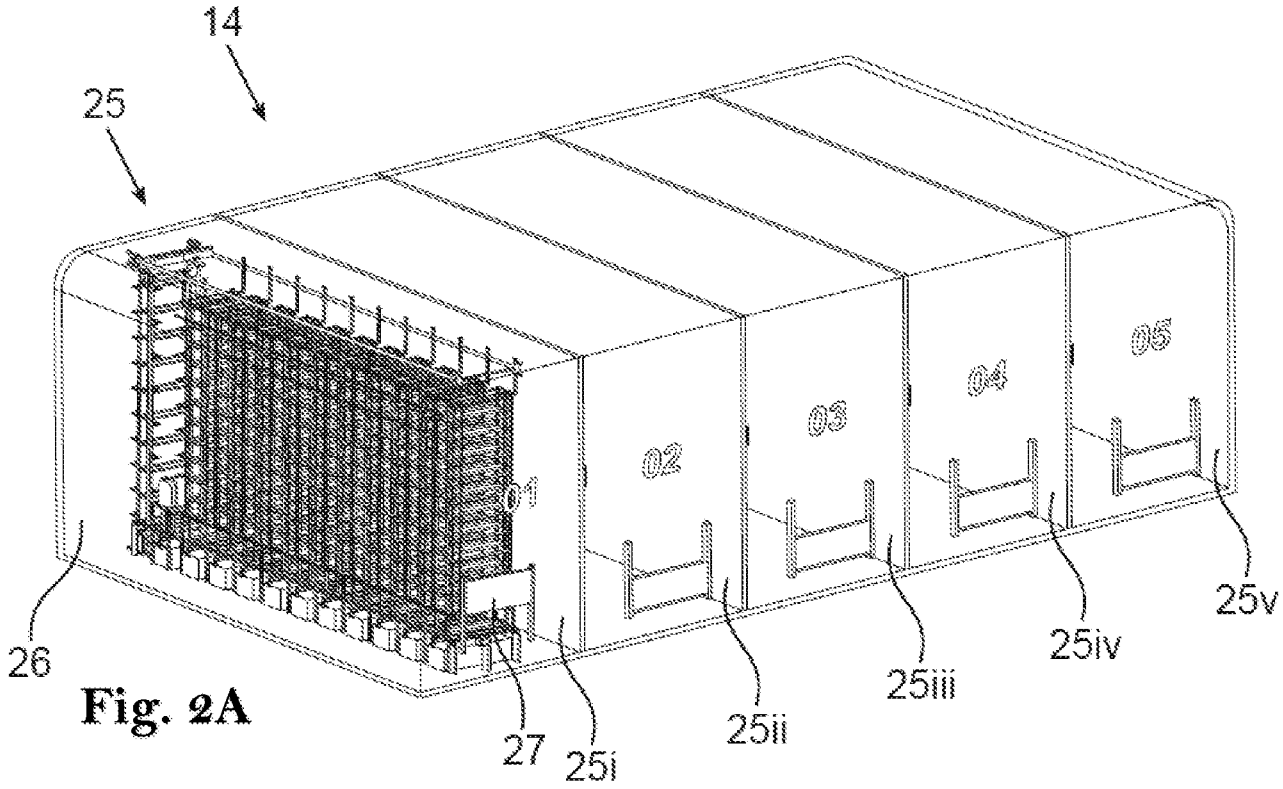
14
25
01
02
03
04
05
26
27
25i
25ii
25iii
25iv
25v

Fig. 2A

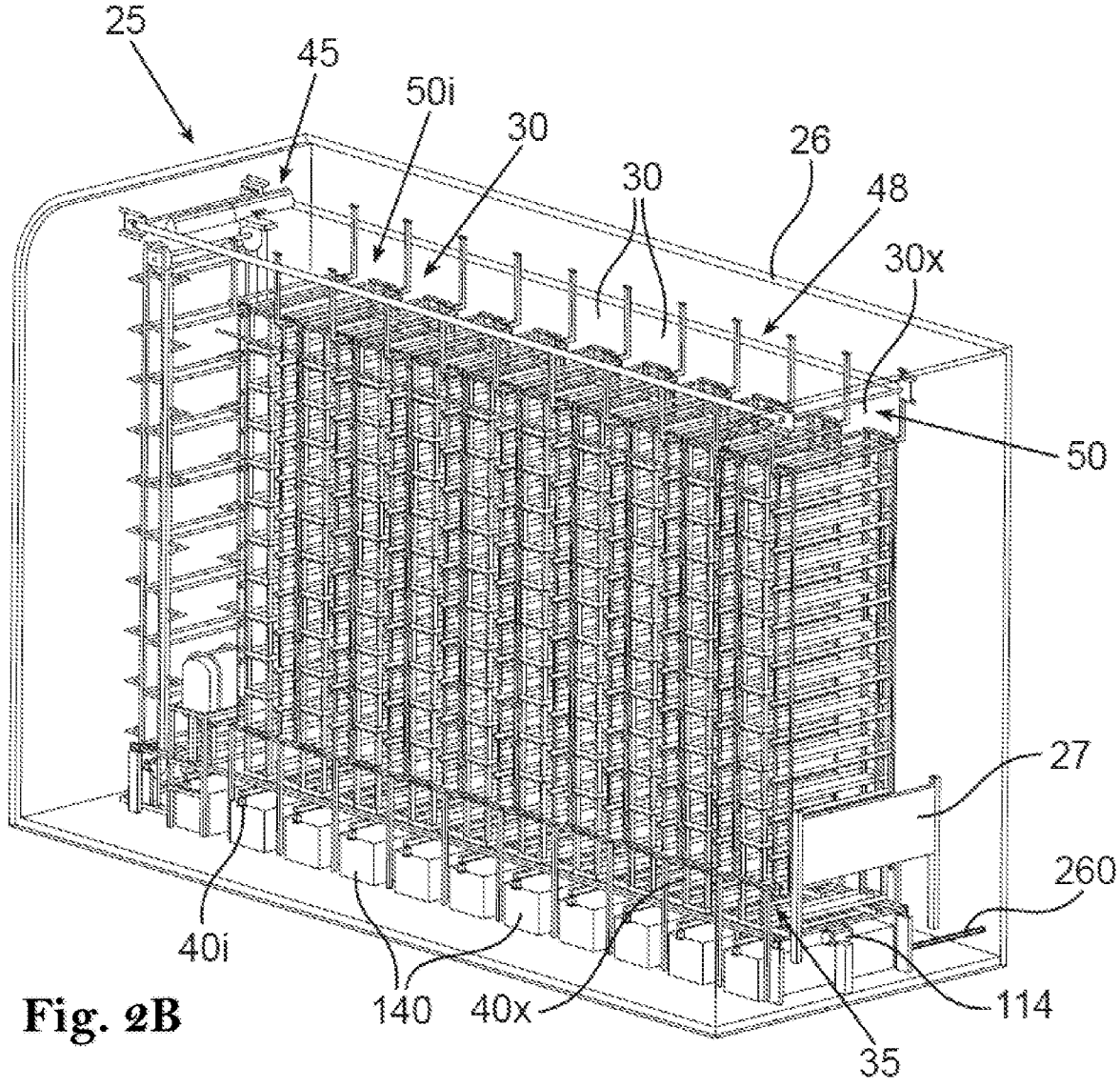
25
45
50i
30
30
26
48
30x
50
27
260
114
35
40i
140
40x

Fig. 2B

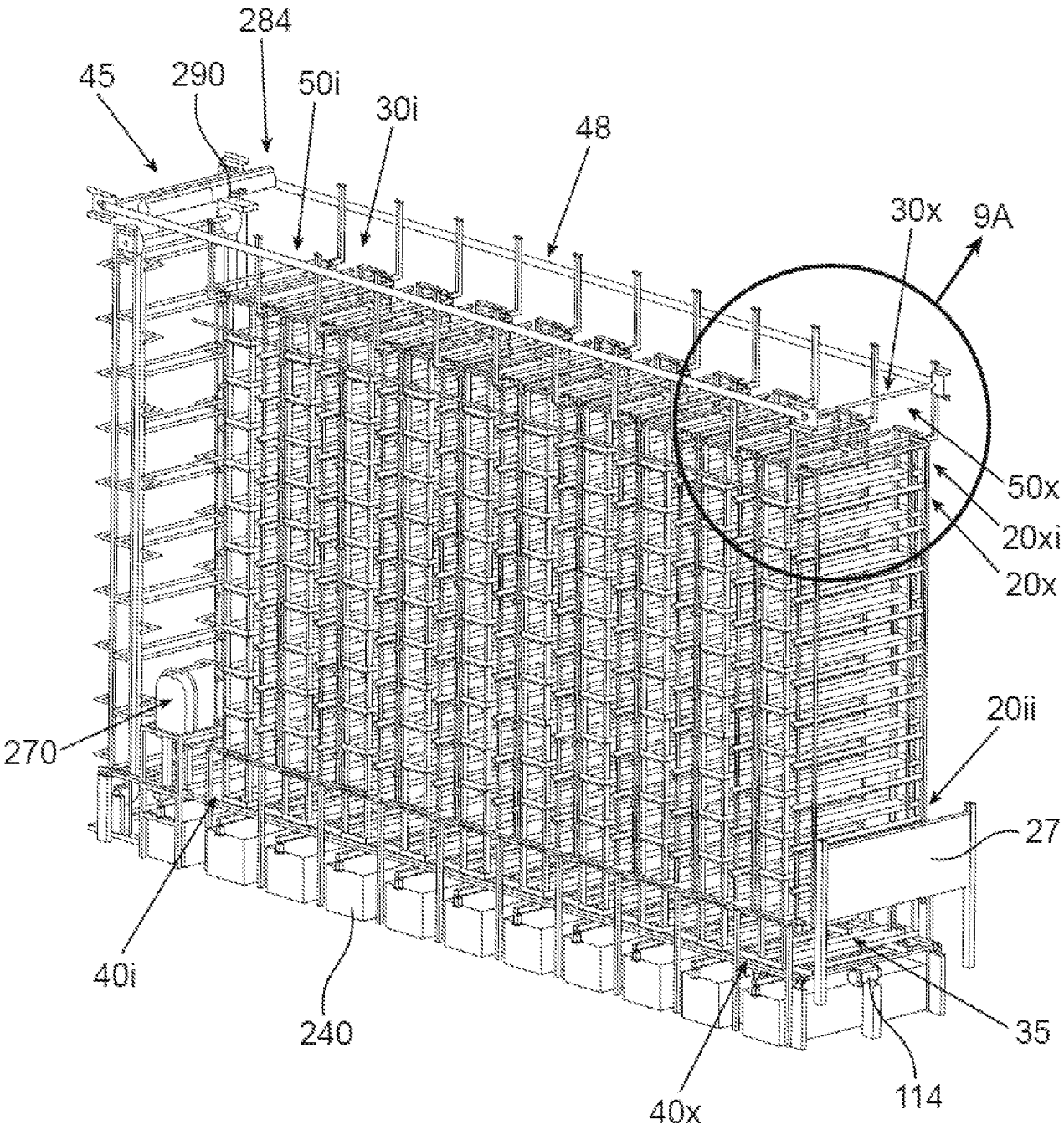
284
45
290
50i
30i
48
30x
9A
50x
20xi
20x
20ii
270
27
40i
240
35
114
40x

Fig. 3A

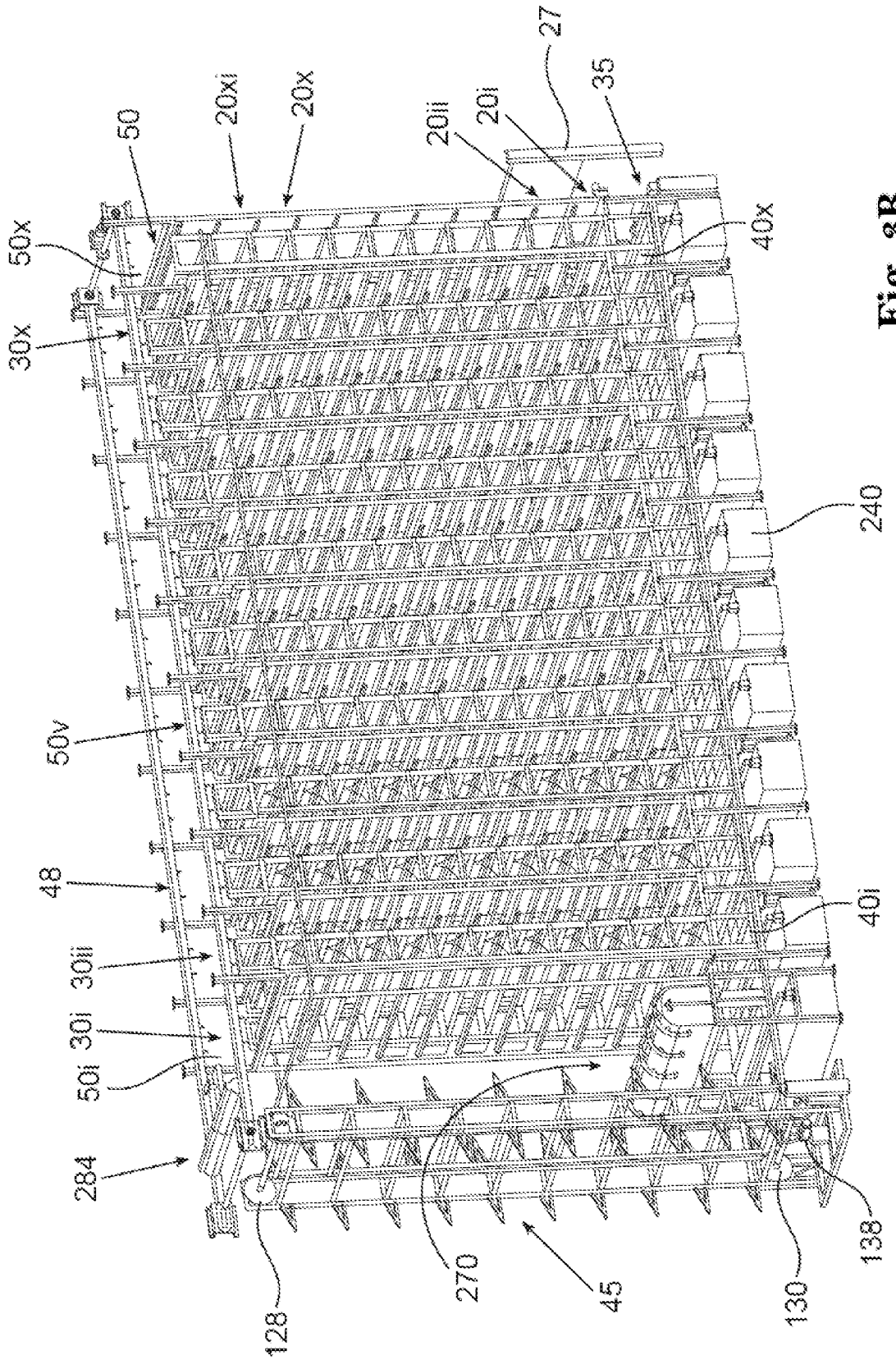
50
20xi
20x
20ii
20i
27
35
50x
40x
30x
240
50v
48
40i
30ii
30i
50i
284
270
45
130
138
128

Fig. 3B

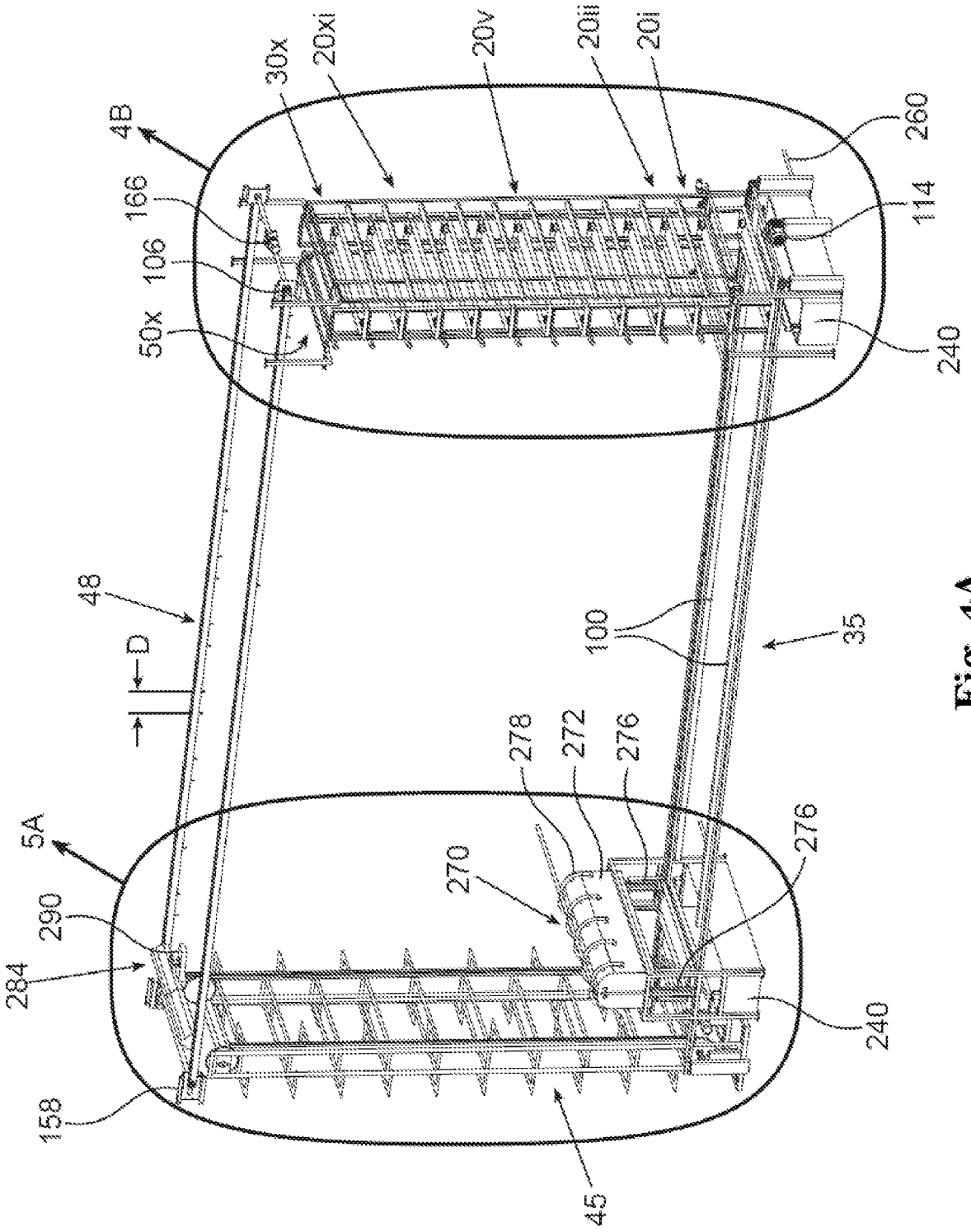
4B
30x
20xi
20v
20ii
20i
260
166
114
106
50x
240
48
D
100
35
278
272
276
5A
270
276
290
284
240
158
45

Fig. 4A

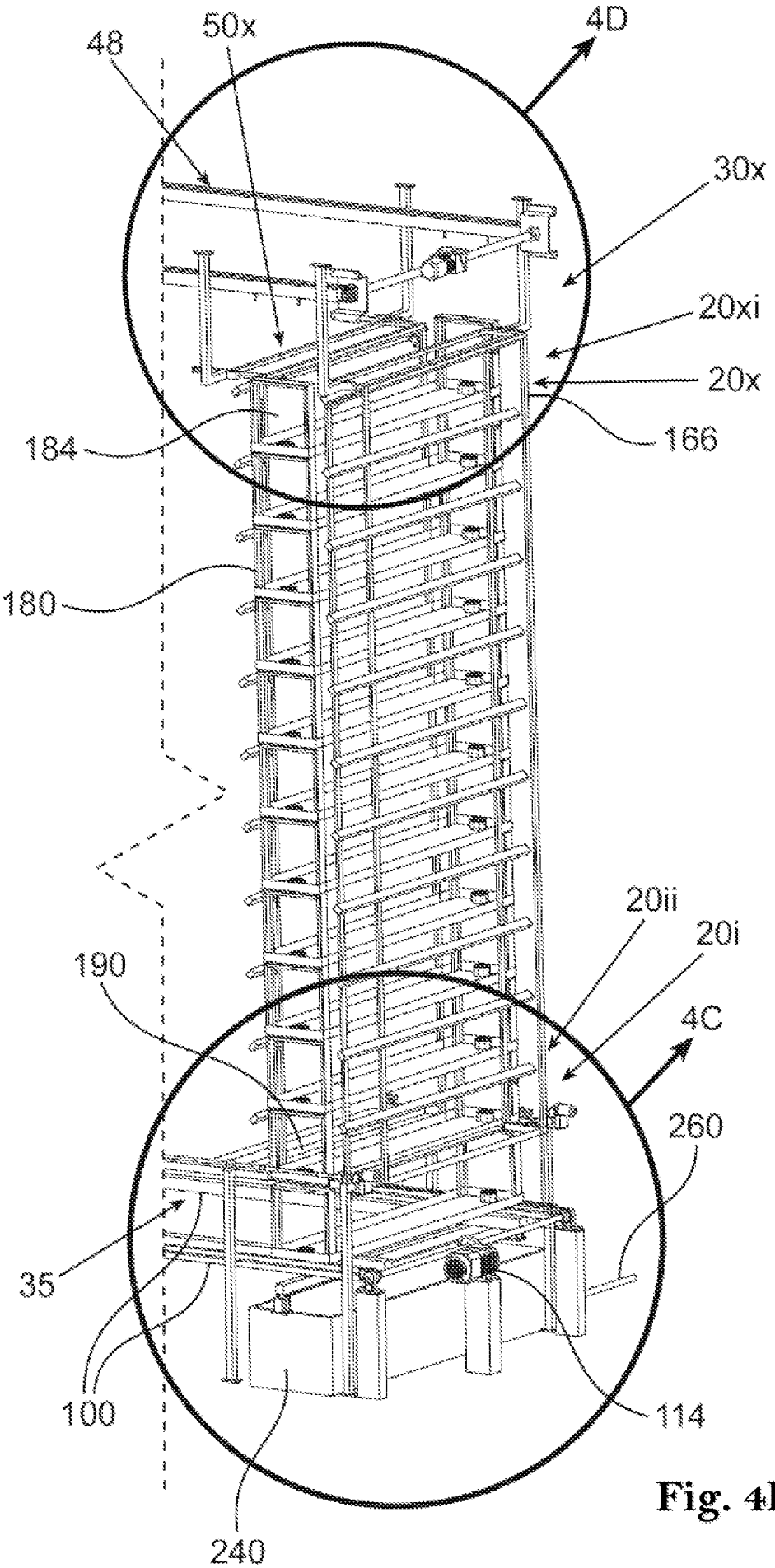
48
50x
4D
30x
20xi
20x
166
184
180
20ii
20i
190
4C
260
35
100
114
240

Fig. 4B

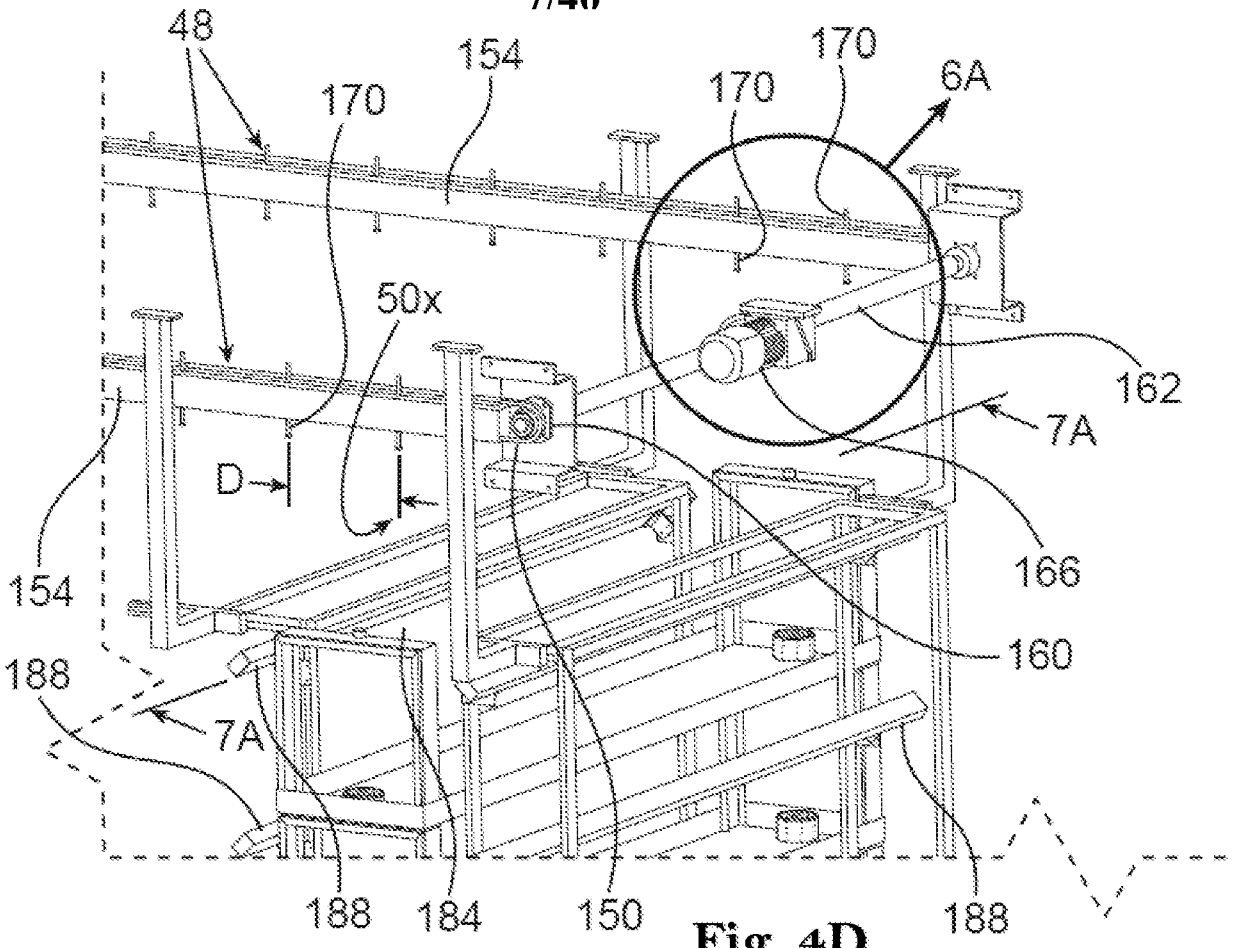
48
154
170
170
170
6A
50x
162
7A
D
166
154
160
188
7A
188
184
150
188

Fig. 4D

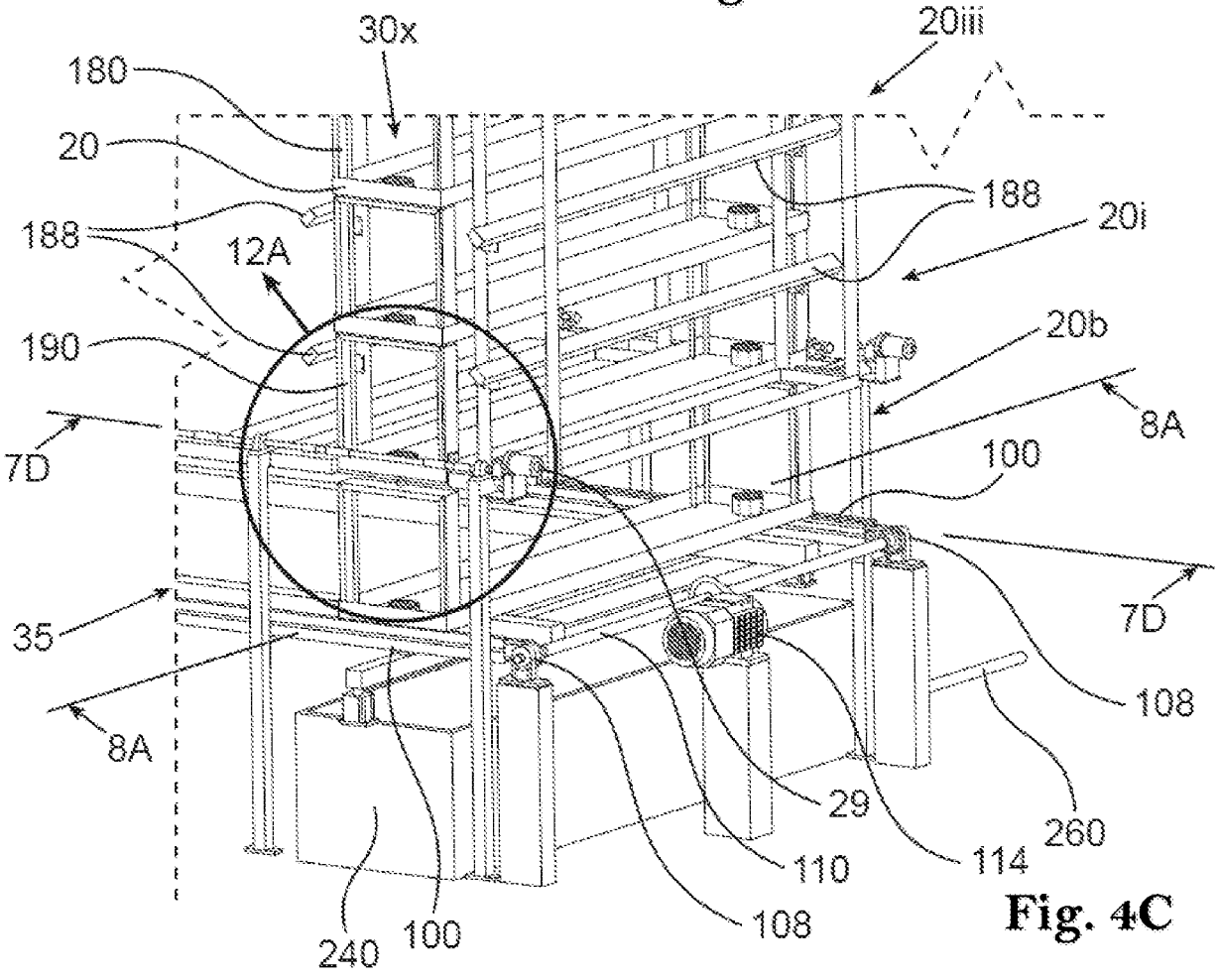
30x
20iii
180
20
188
188
20i
12A
190
20b
8A
7D
100
7D
35
108
8A
29
260
110
114
108
240
100

Fig. 4C

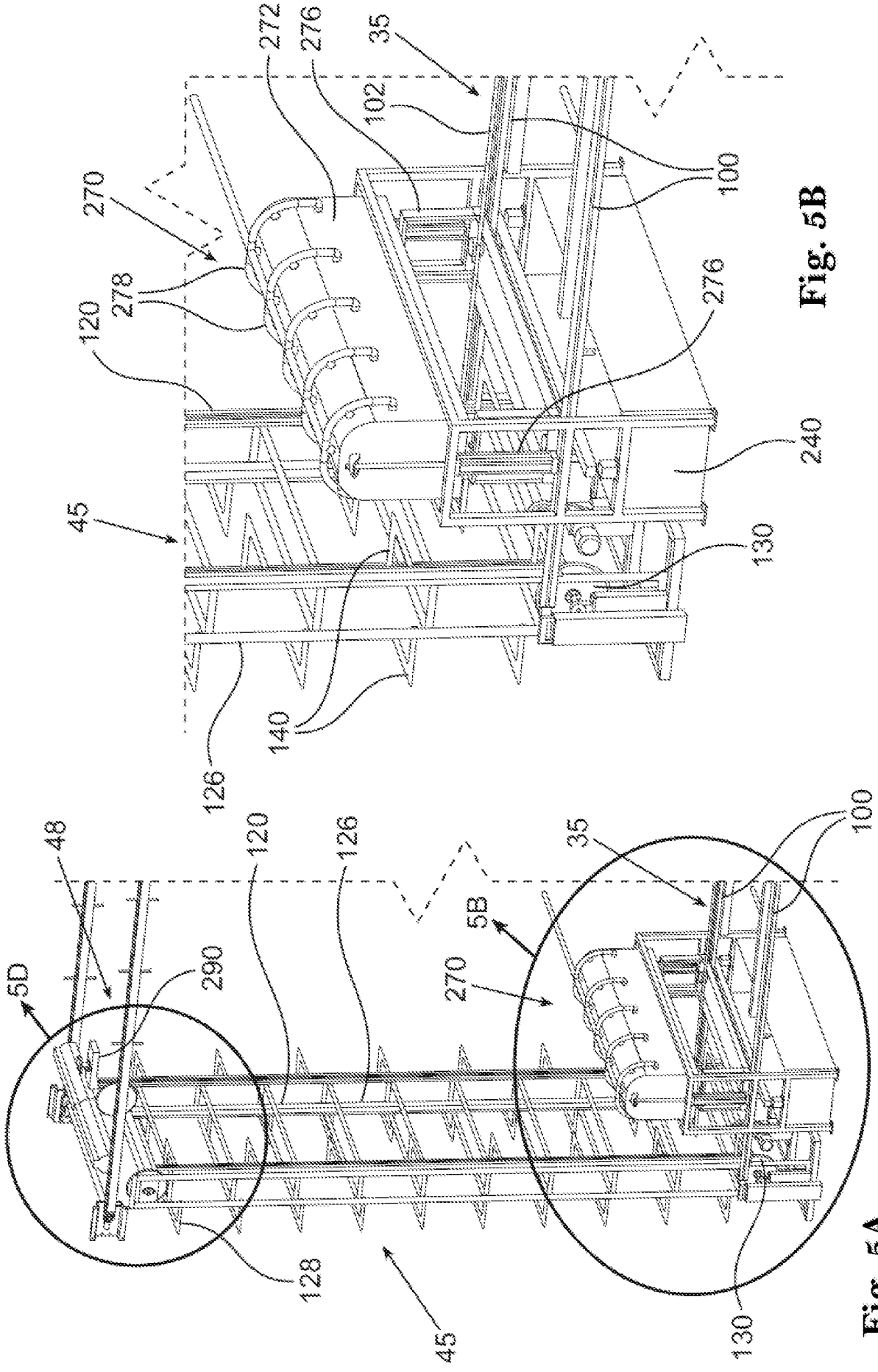
48
120
126
35
100
5B
5D
290
270
128
45
130

Fig. 5A

272
276
35
102
100
270
278
120
276
240
45
130
140
126

Fig. 5B

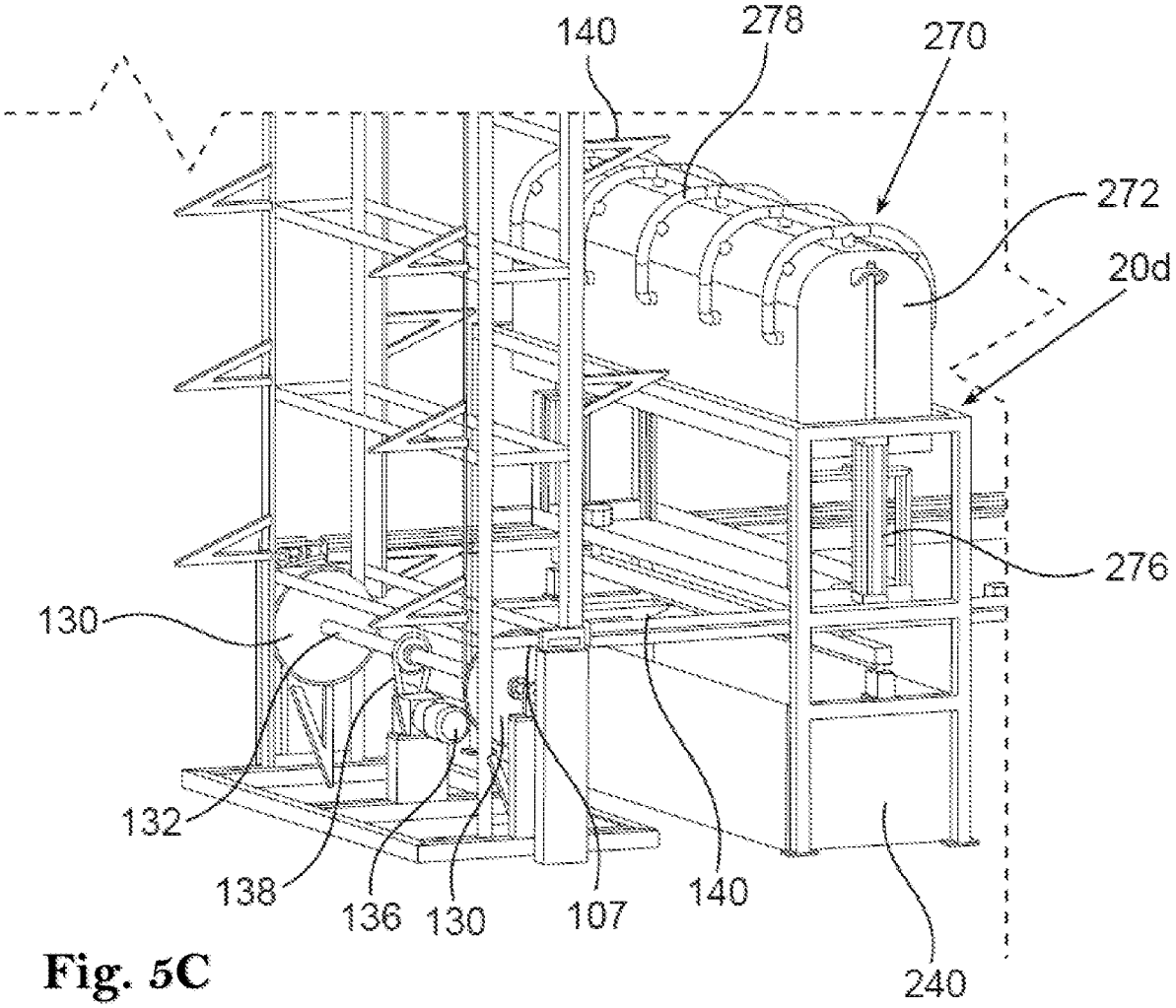
140
278
270
272
20d
276
130
132
138
136
130
107
140
240

Fig. 5C

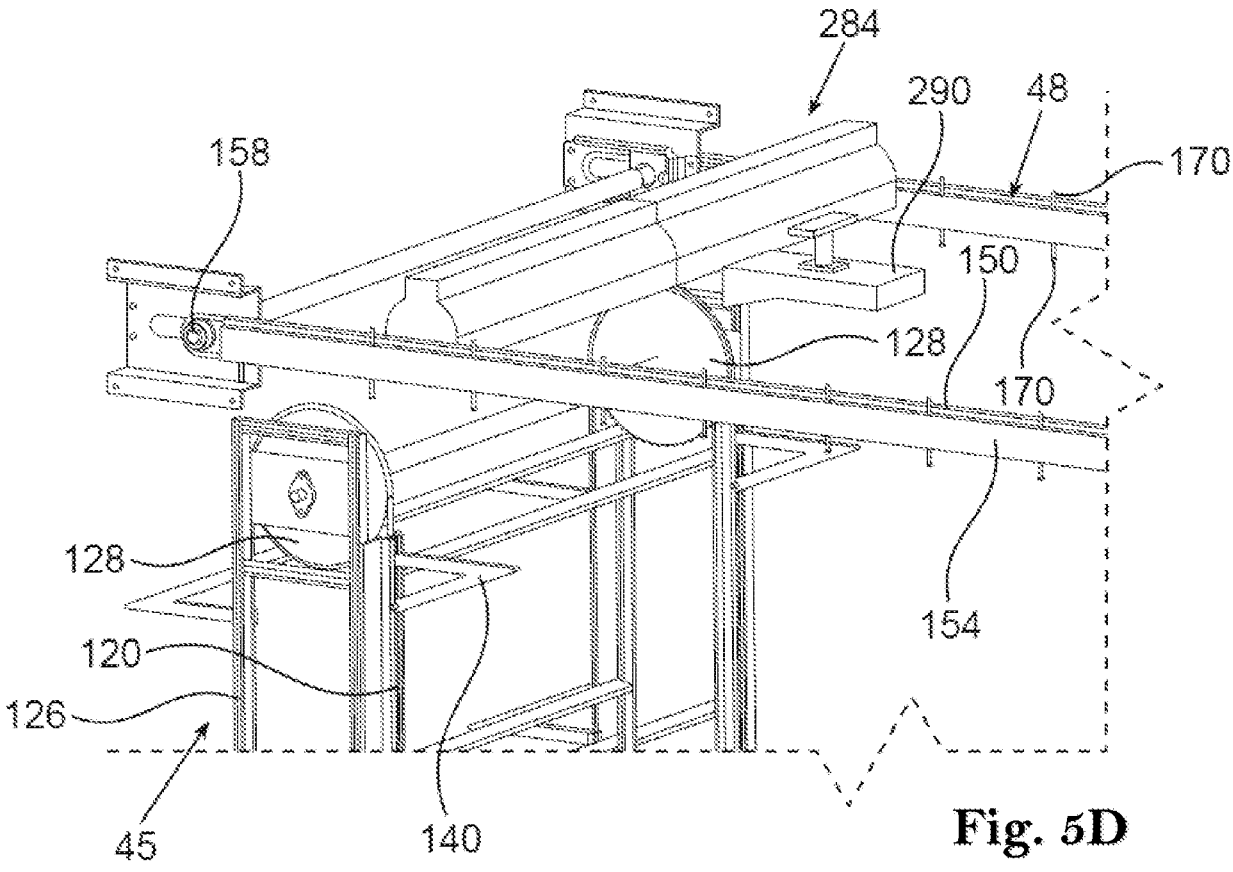
284
290
48
170
158
150
128
170
128
154
120
126
45
140

Fig. 5D

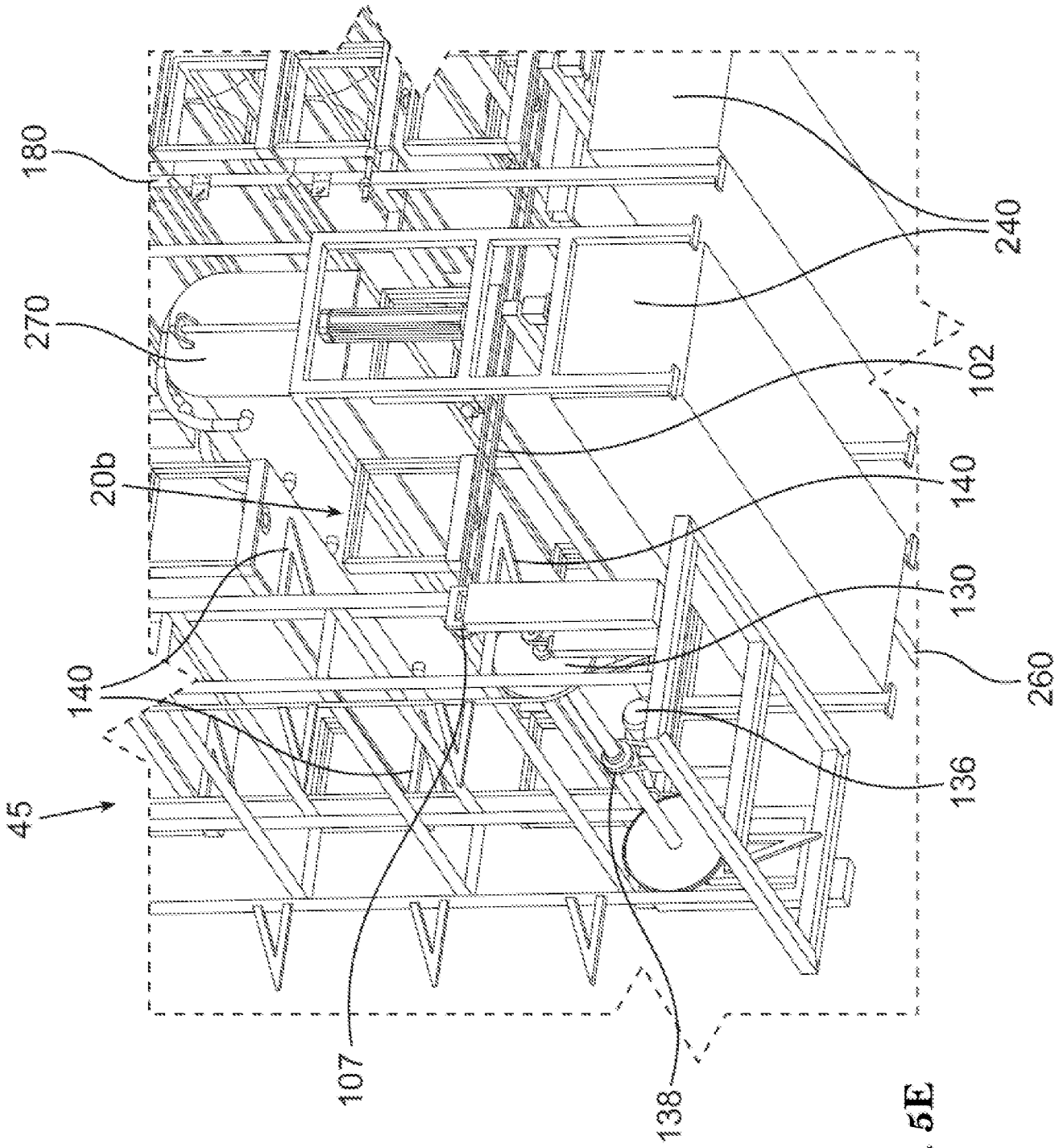

Fig. 5E

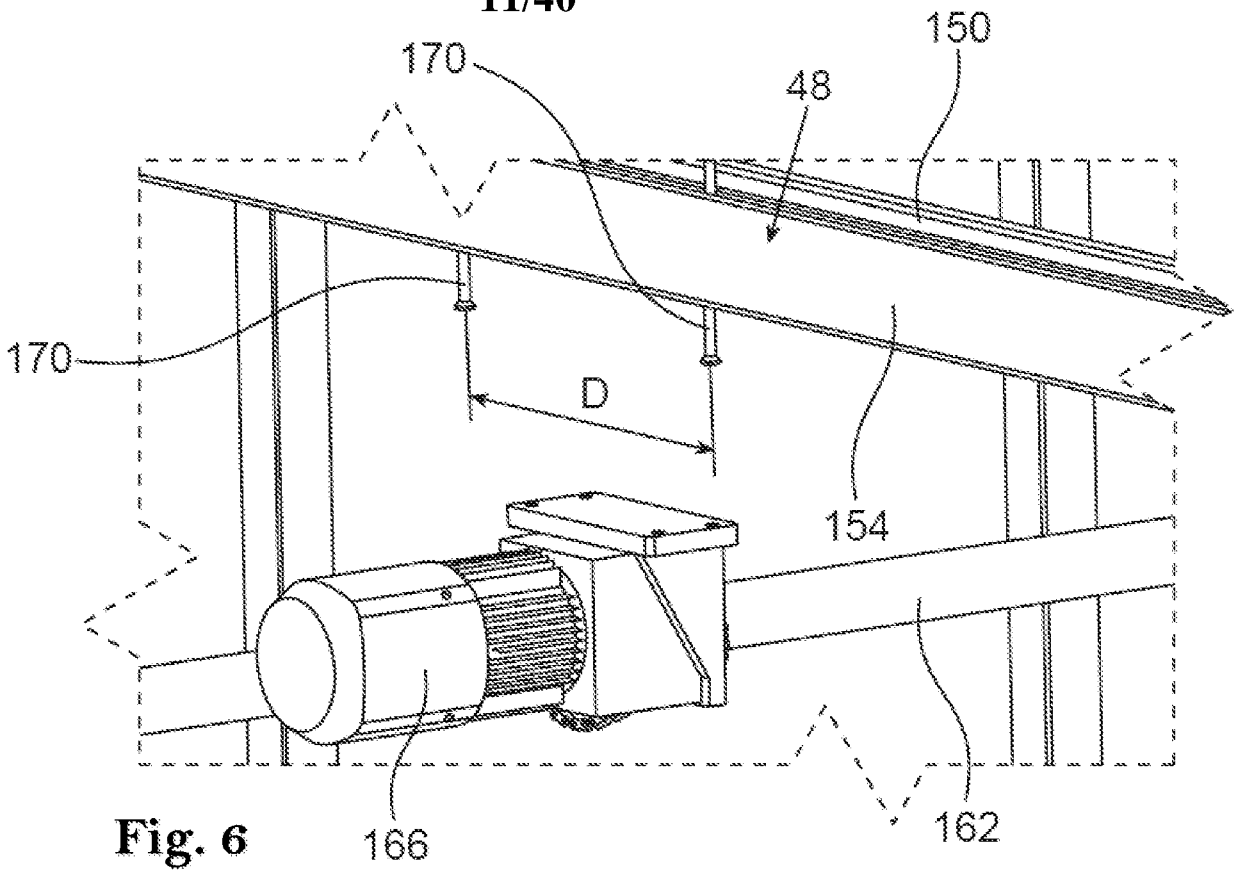
170
48
150
170
D
154
166
162

Fig. 6

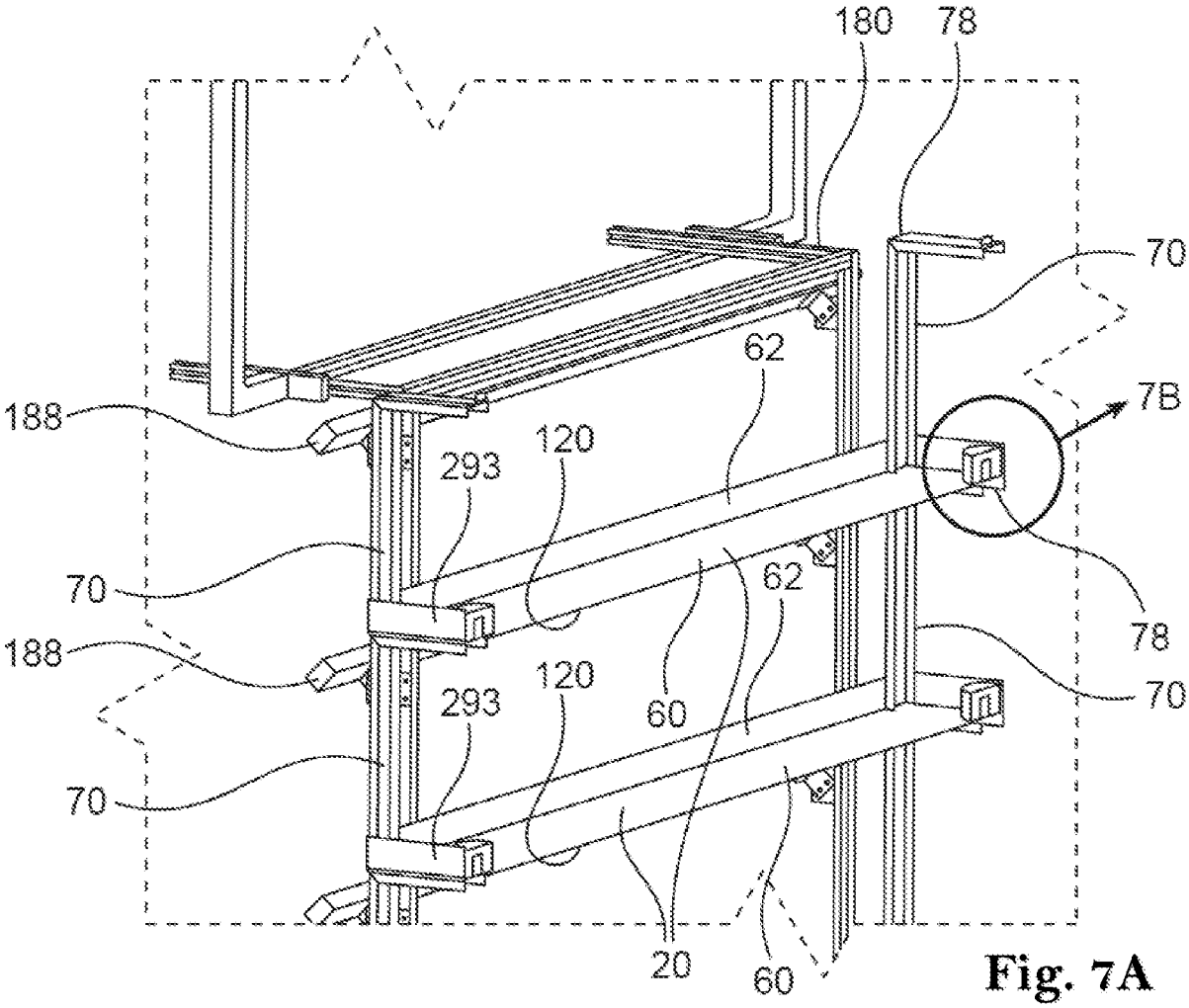
180
78
70
62
7B
188
293
120
70
62
78
188
120
293
60
70
70
20
60

Fig. 7A

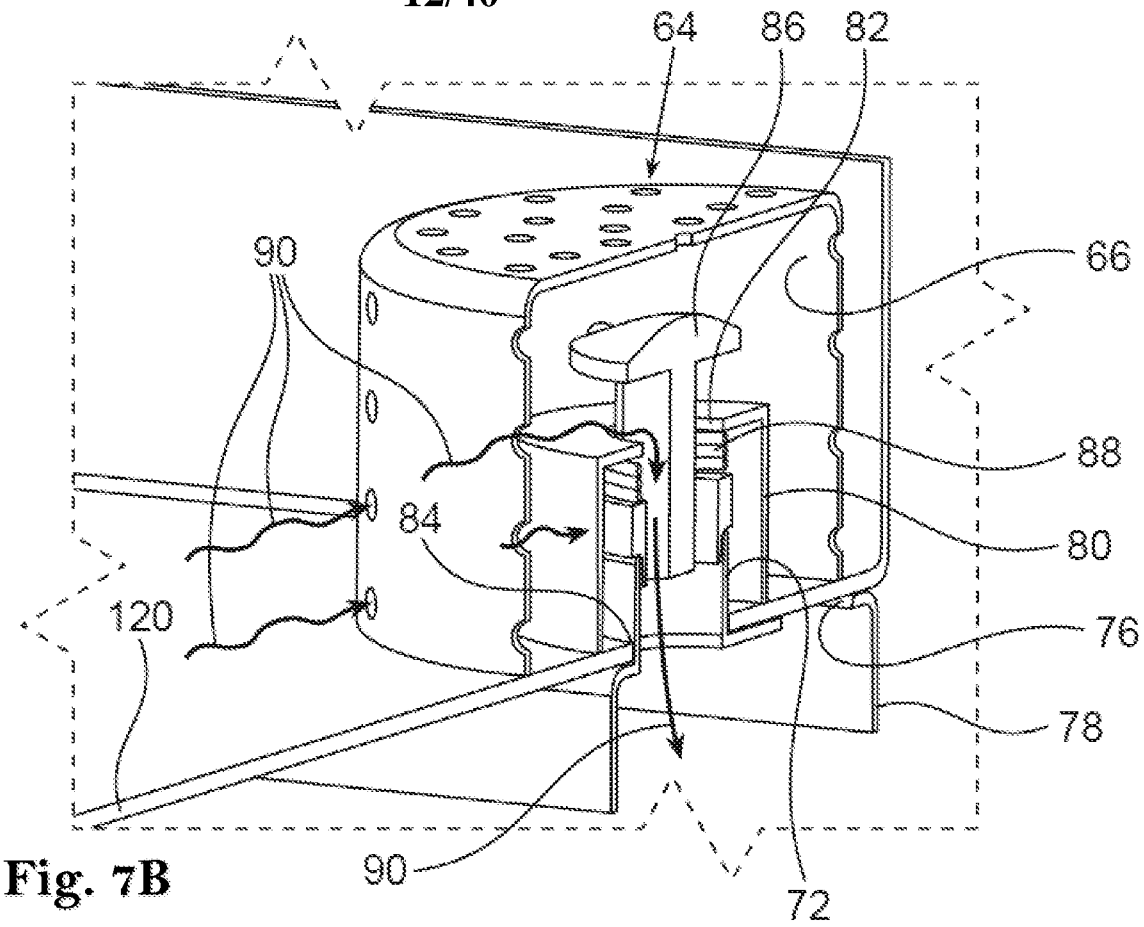
64
86
82
90
66
88
84
80
120
76
78
90
72

Fig. 7B

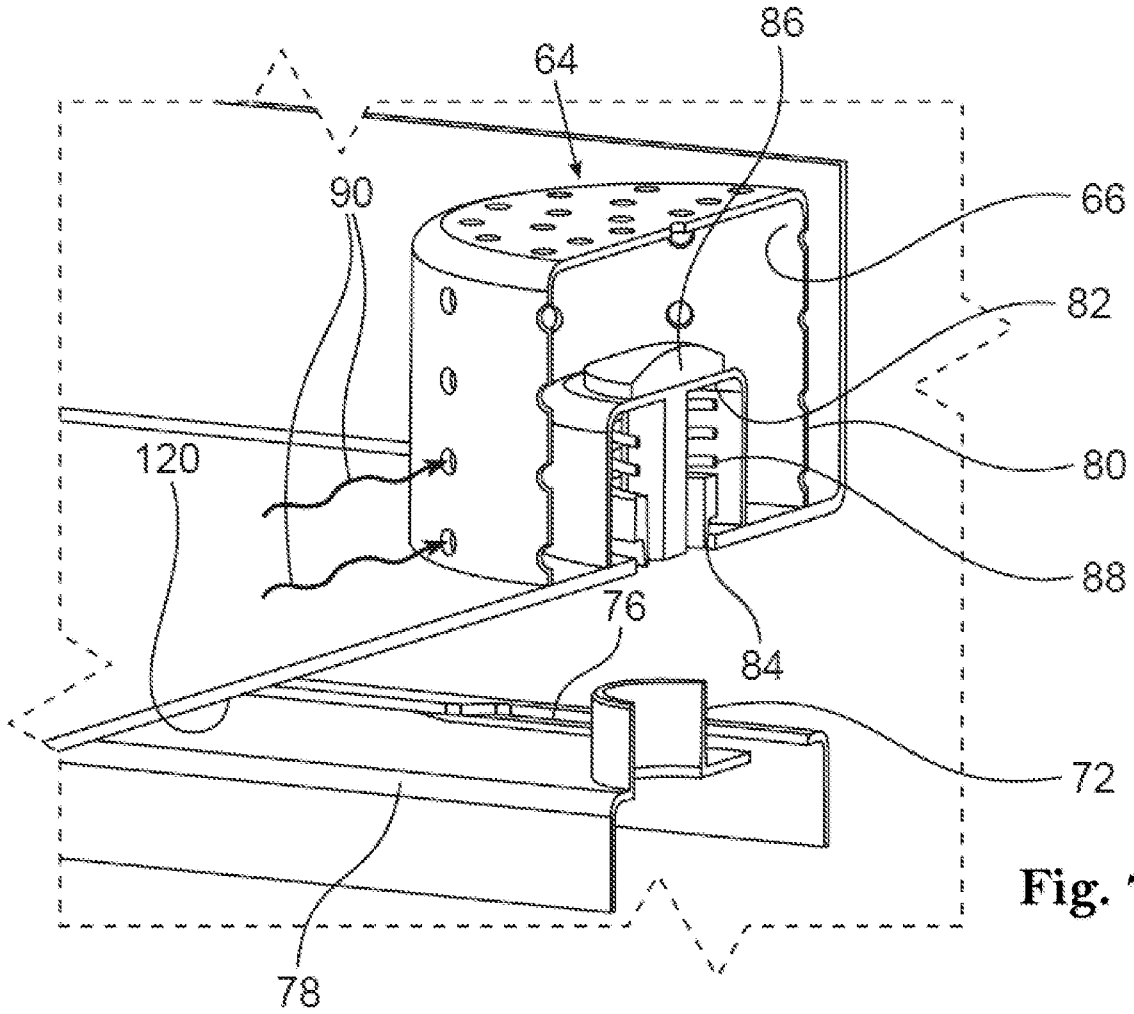
86
64
90
66
82
120
80
88
76
84
72
78

Fig. 7C

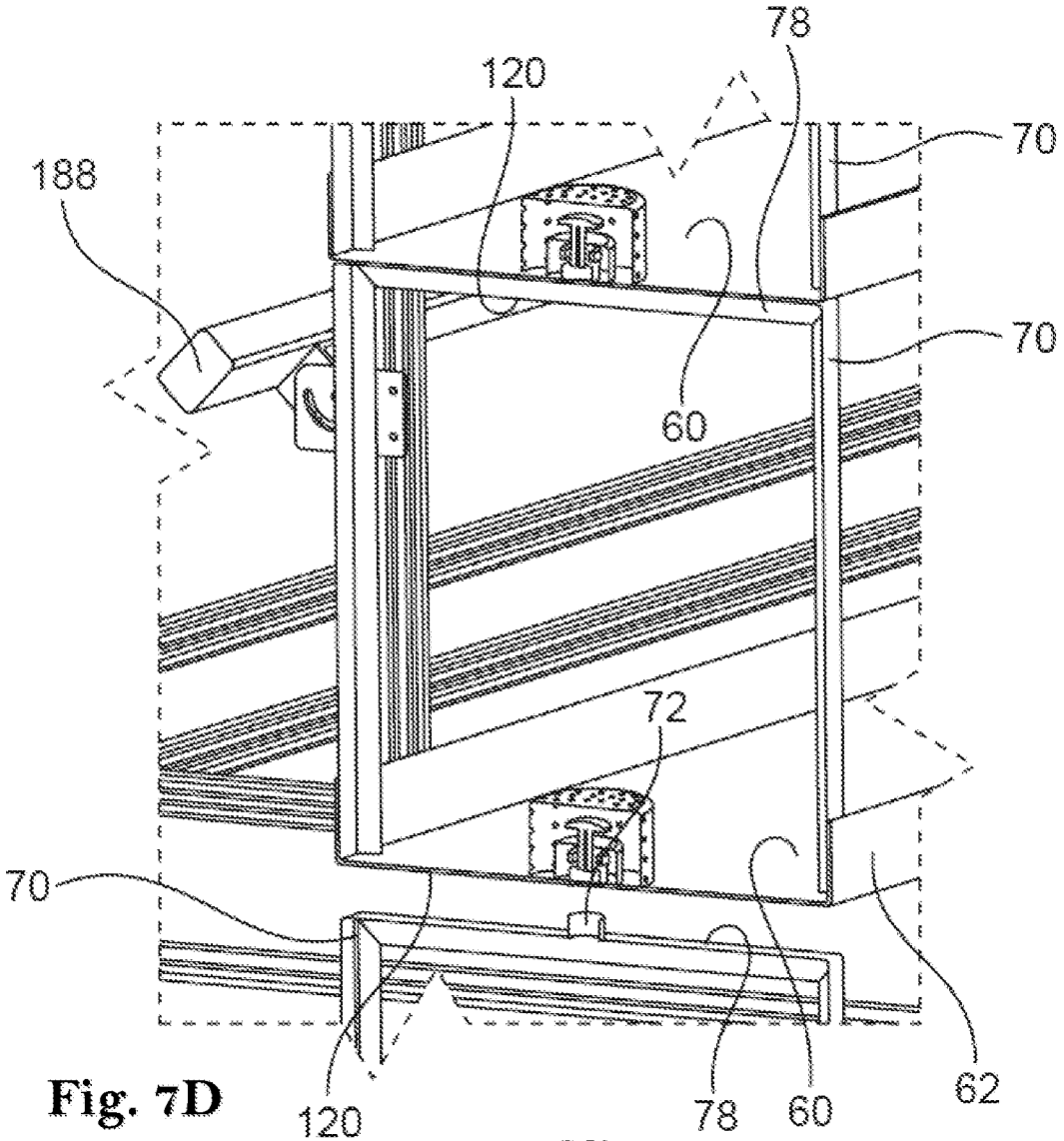
78
120
70
188
70
60
72
70
120
78
60
62

Fig. 7D

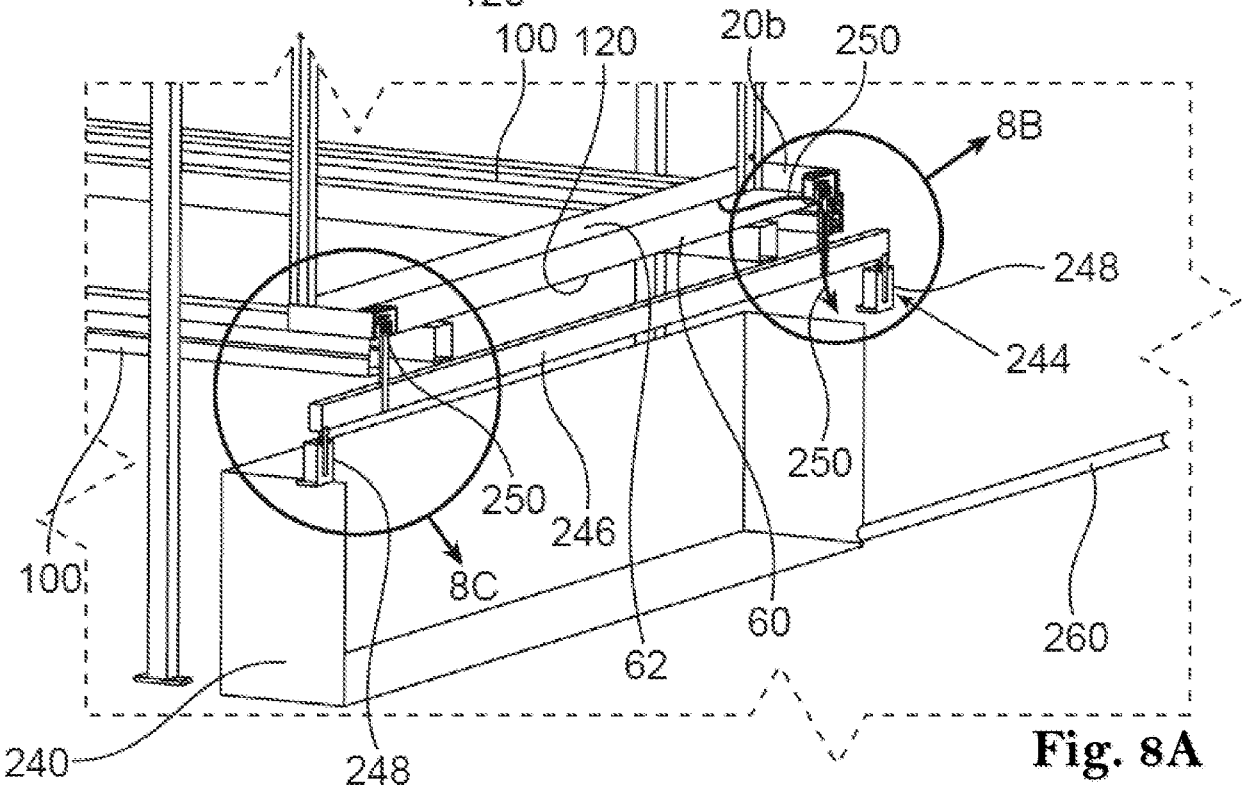
100
120
20b
250
8B
248
244
250
250
246
100
8C
60
62
260
240
248

Fig. 8A

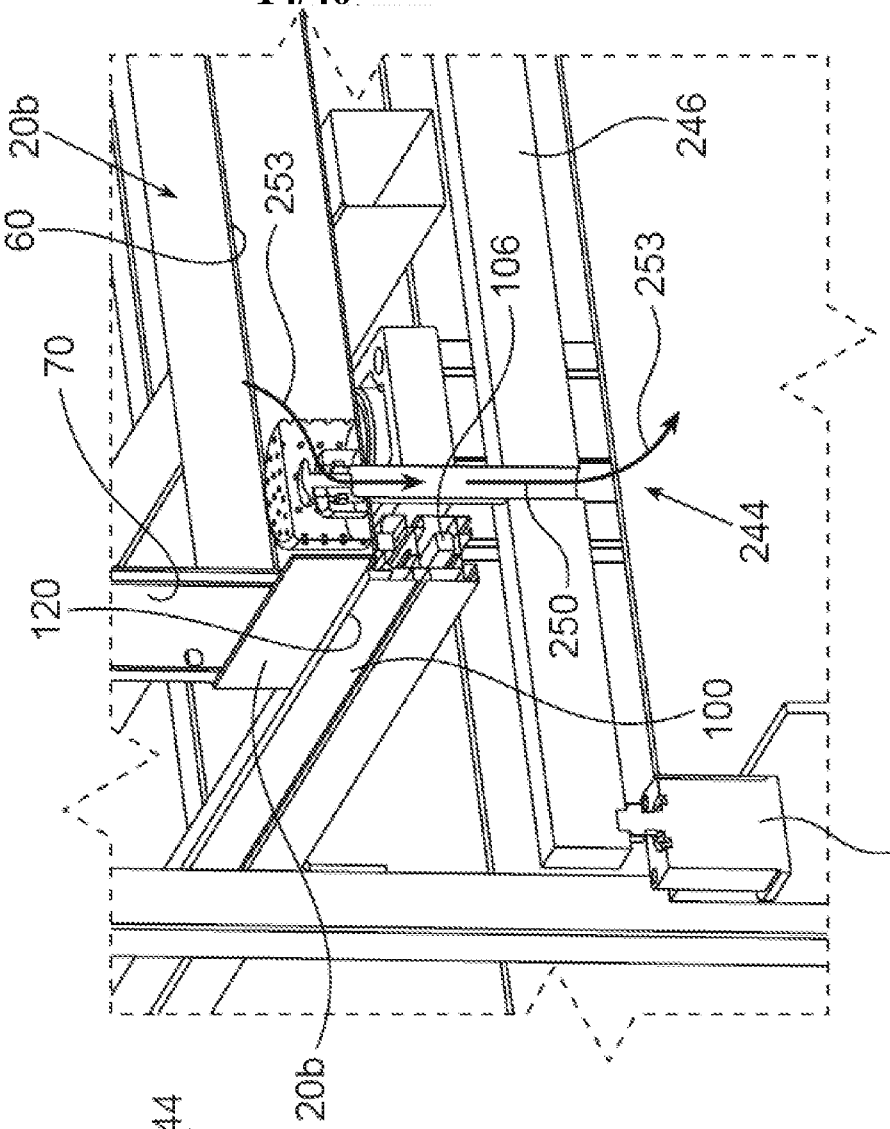
20b
60
253
70
120
106
253
246
244
250
100
248
20b

Fig. 8C

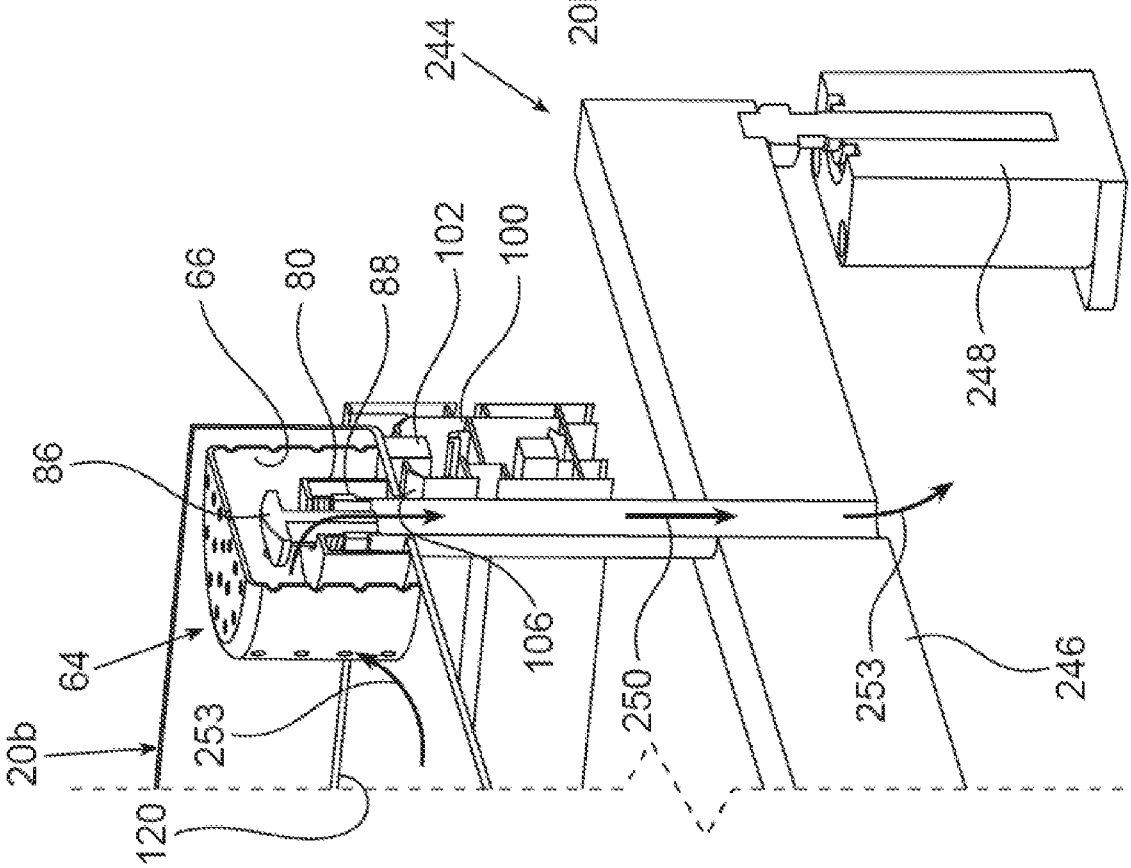
244
66
80
88
102
100
86
64
20b
253
120
106
250
253
246
248

Fig. 8B

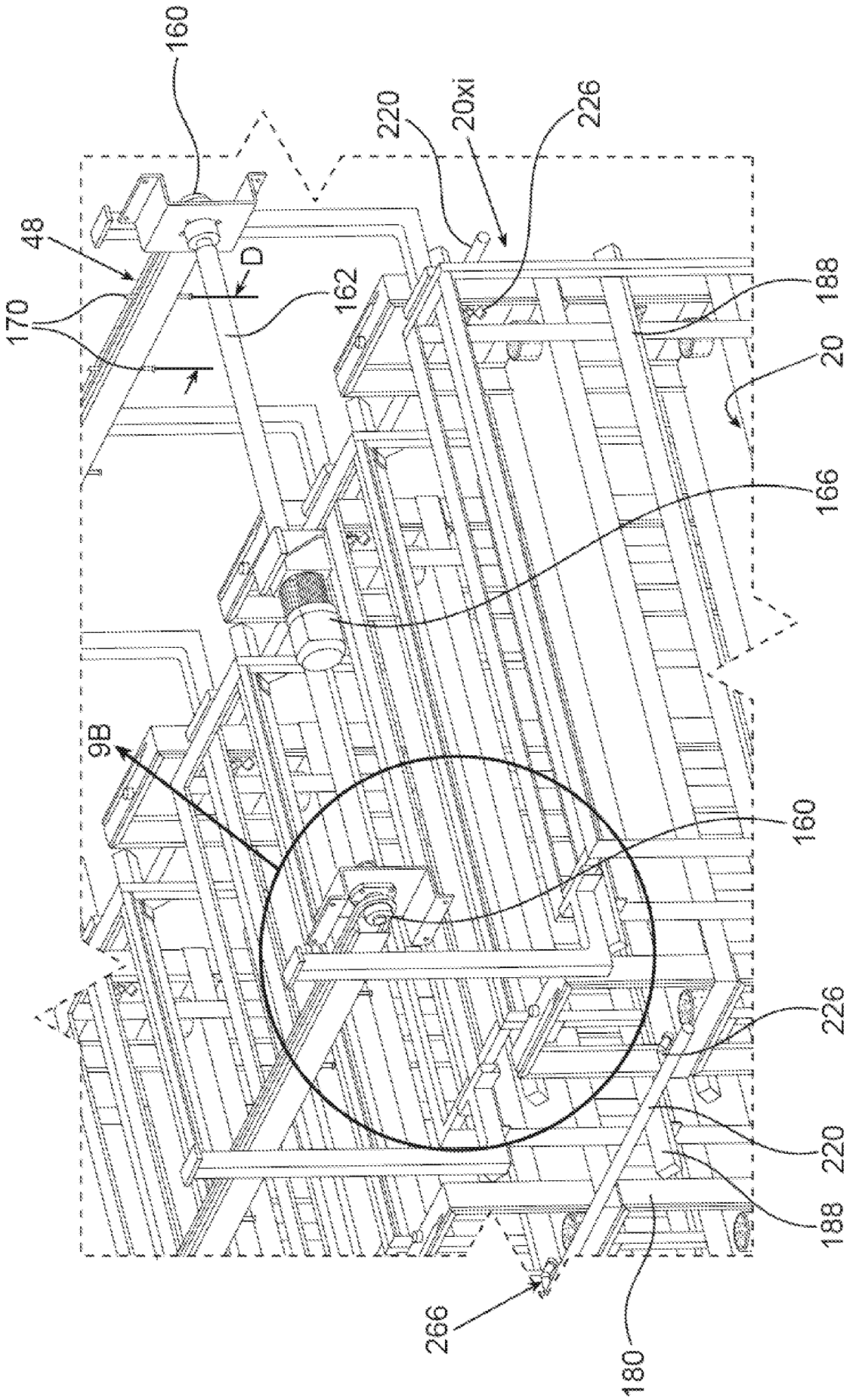
160
220
20xi
226
48
D
162
170
188
20
166
9B
160
226
220
188
266
180

Fig. 9A

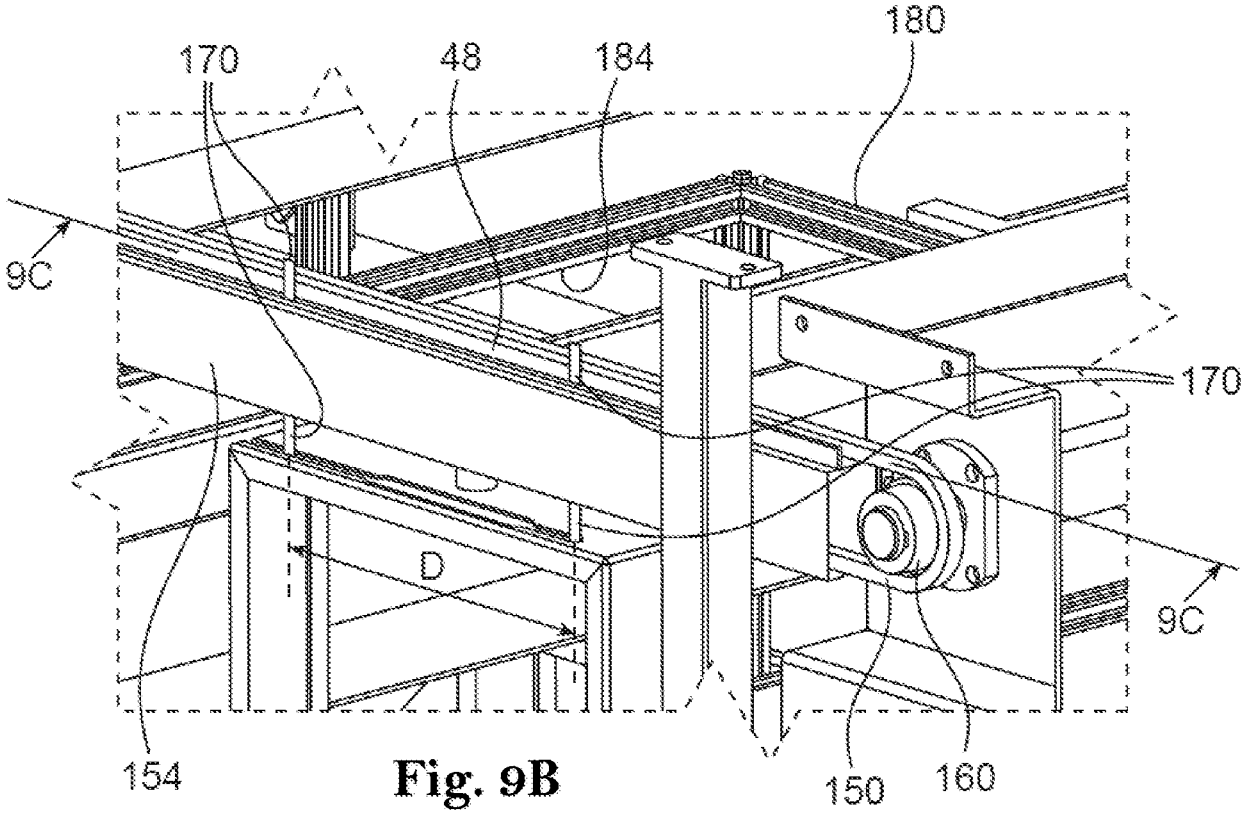
180
170
48
184
9C
170
D
9C
154
150
160

Fig. 9B

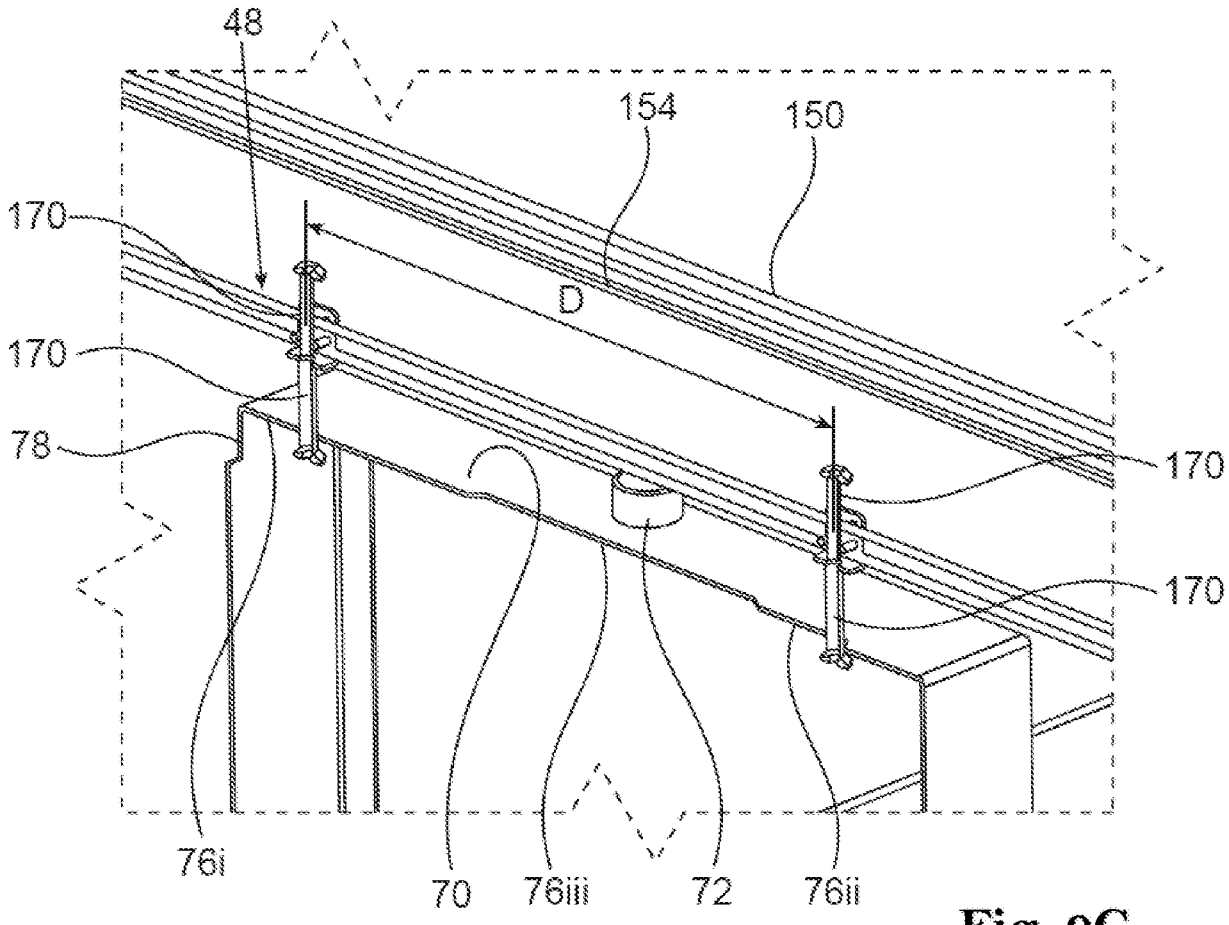
48
154
150
170
D
170
78
170
170
76i
70
76iii
72
76ii

Fig. 9C

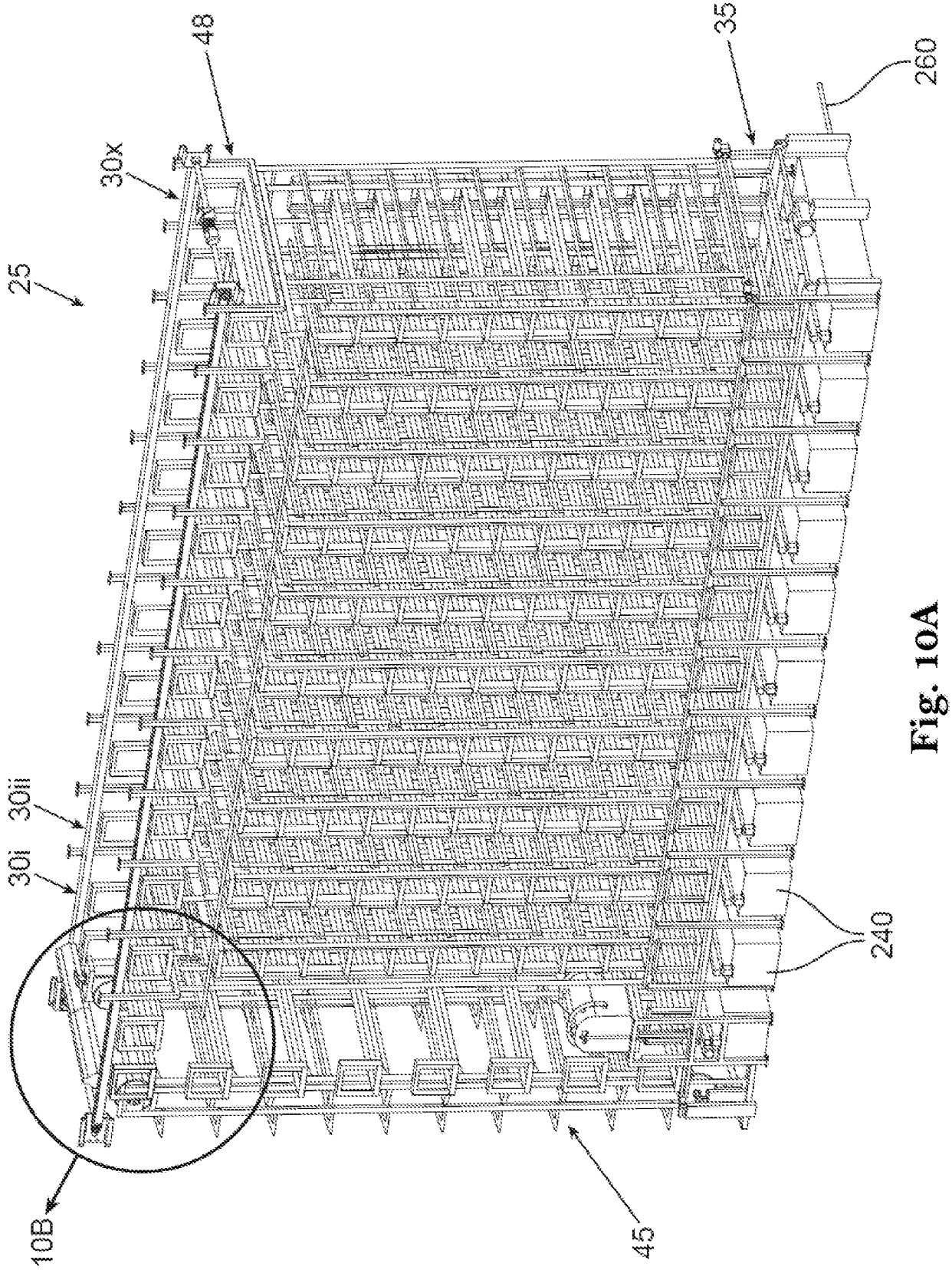

Fig. 10A

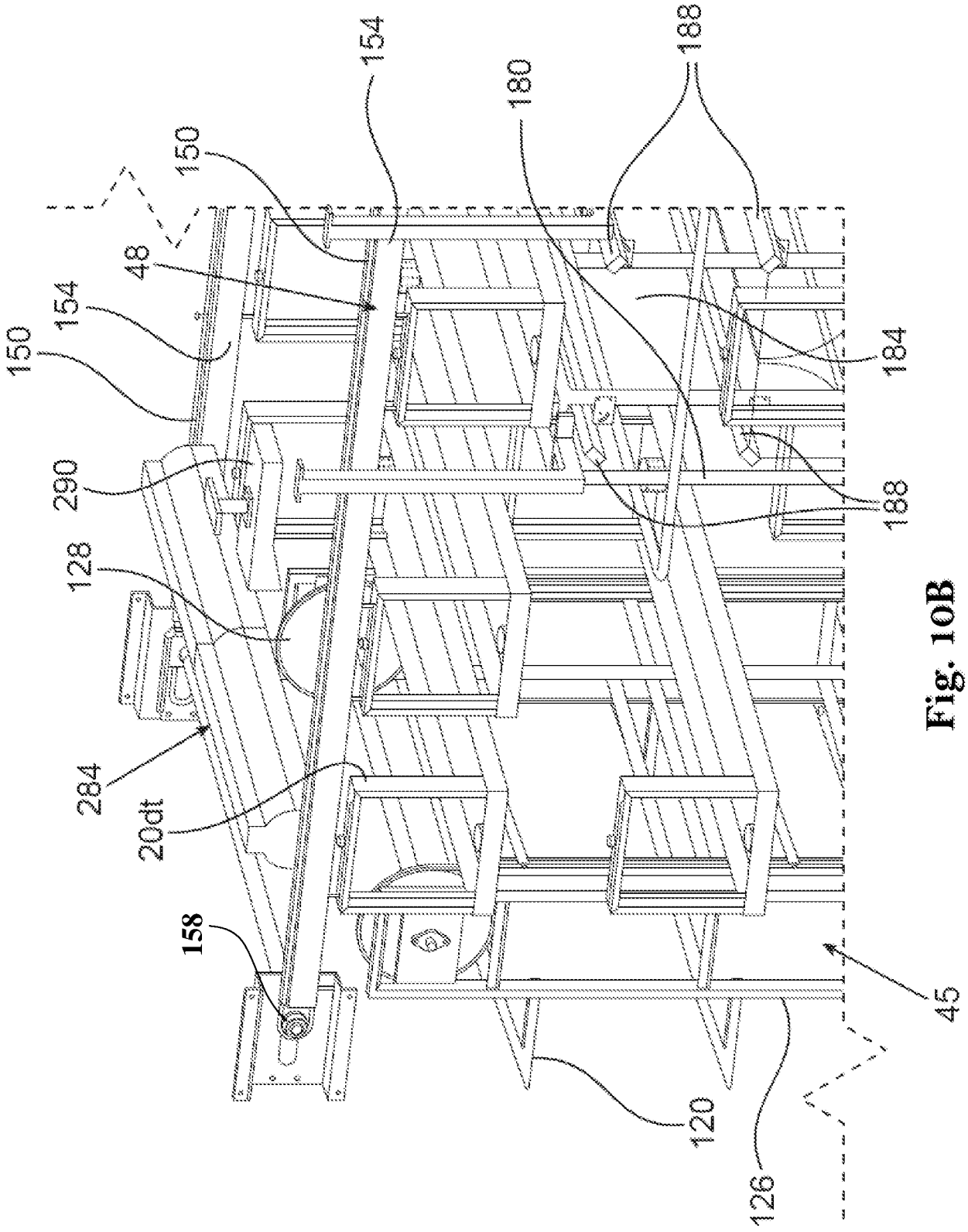
154
188
180
150
48
154
150
184
290
188
128
284
20dt
158
45
120
126

Fig. 10B

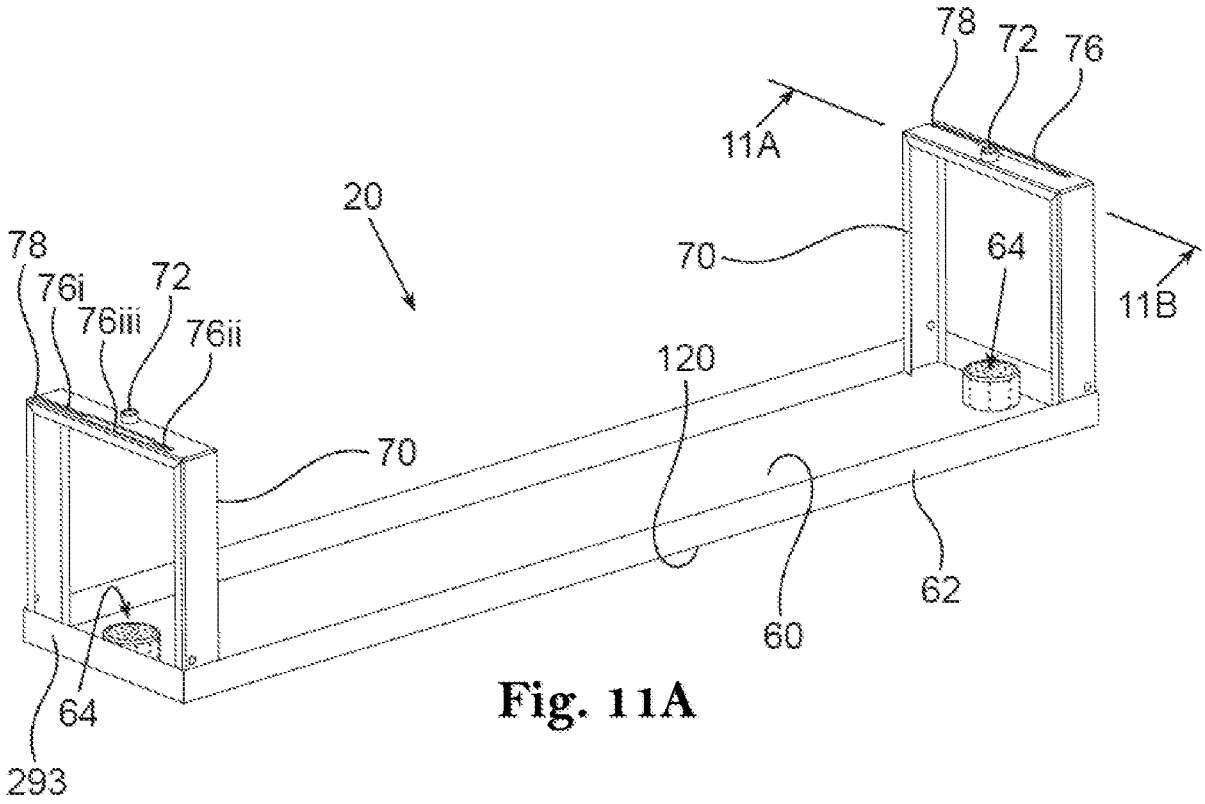

Fig. 11A

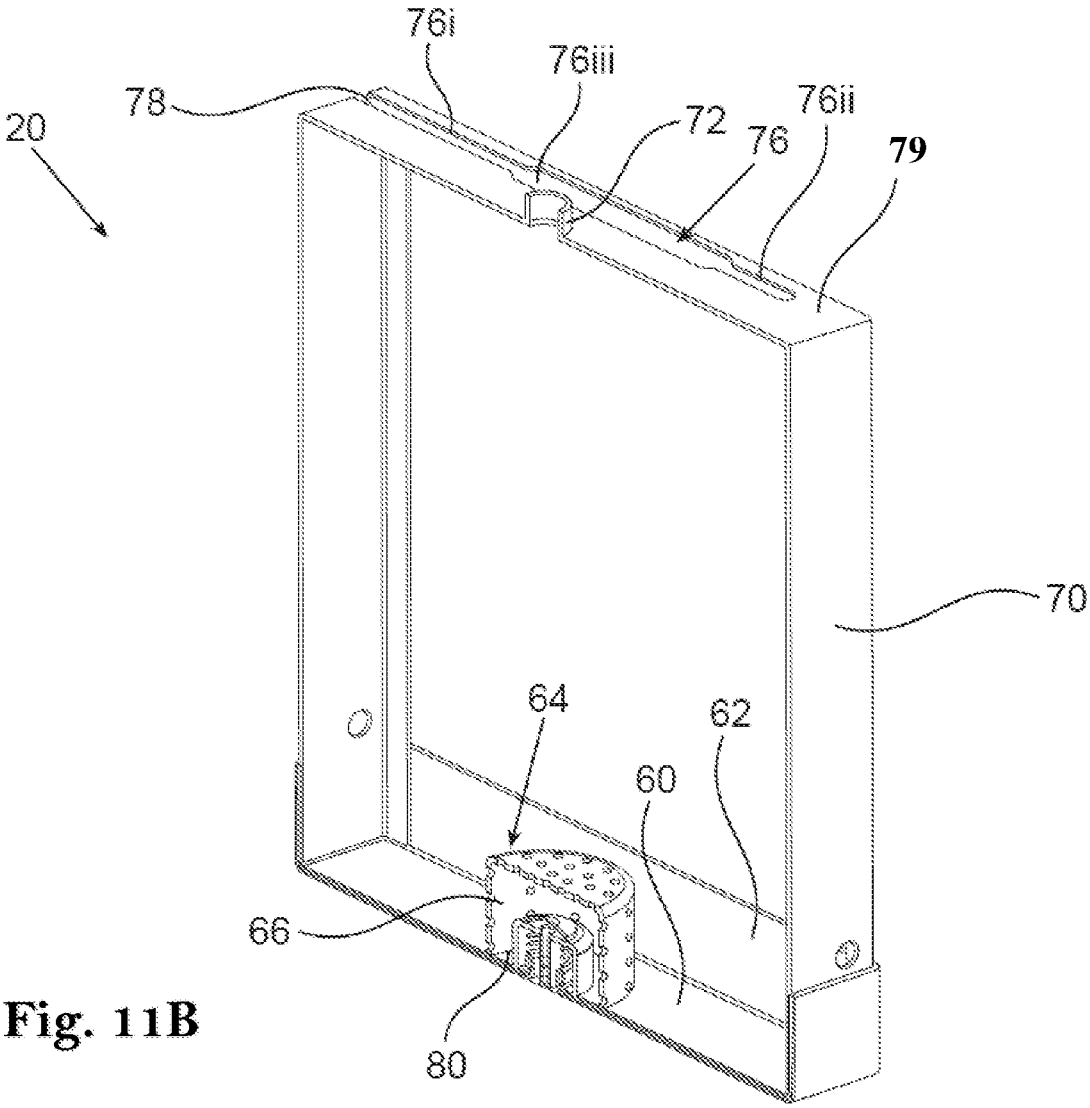

Fig. 11B

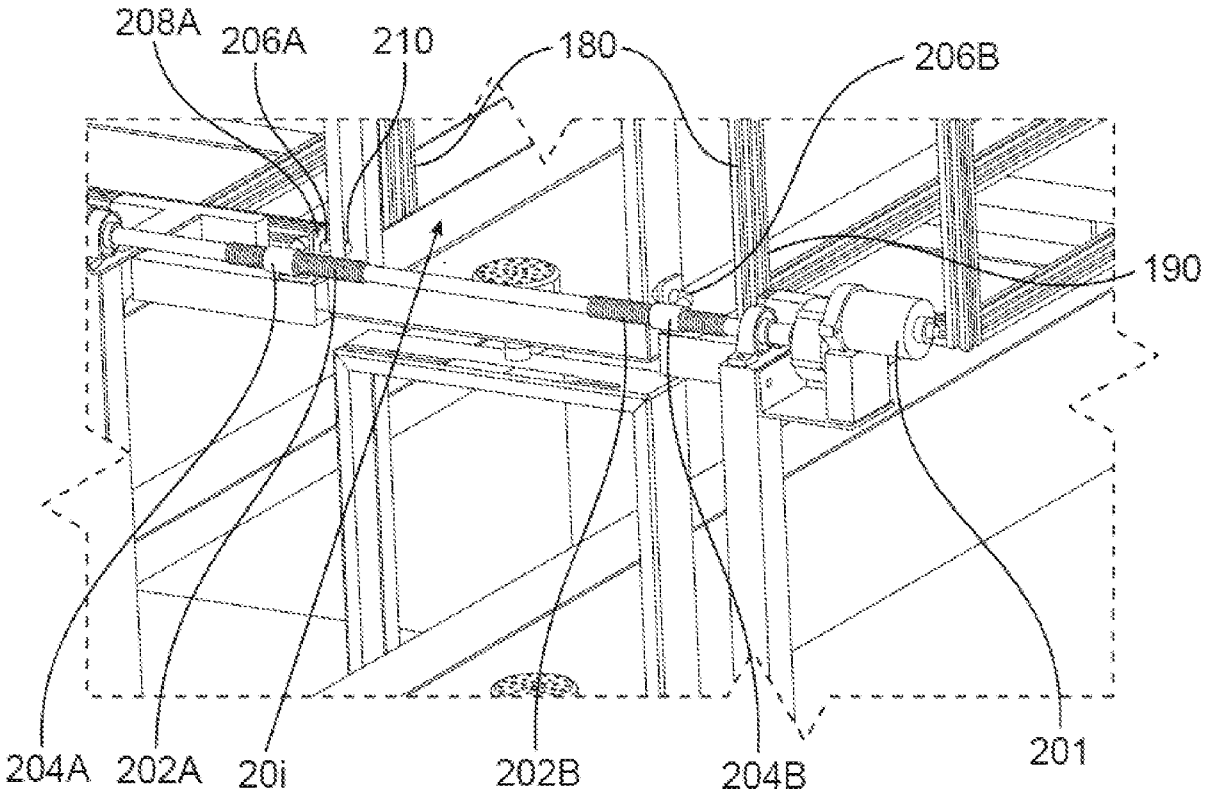

Fig. 12A

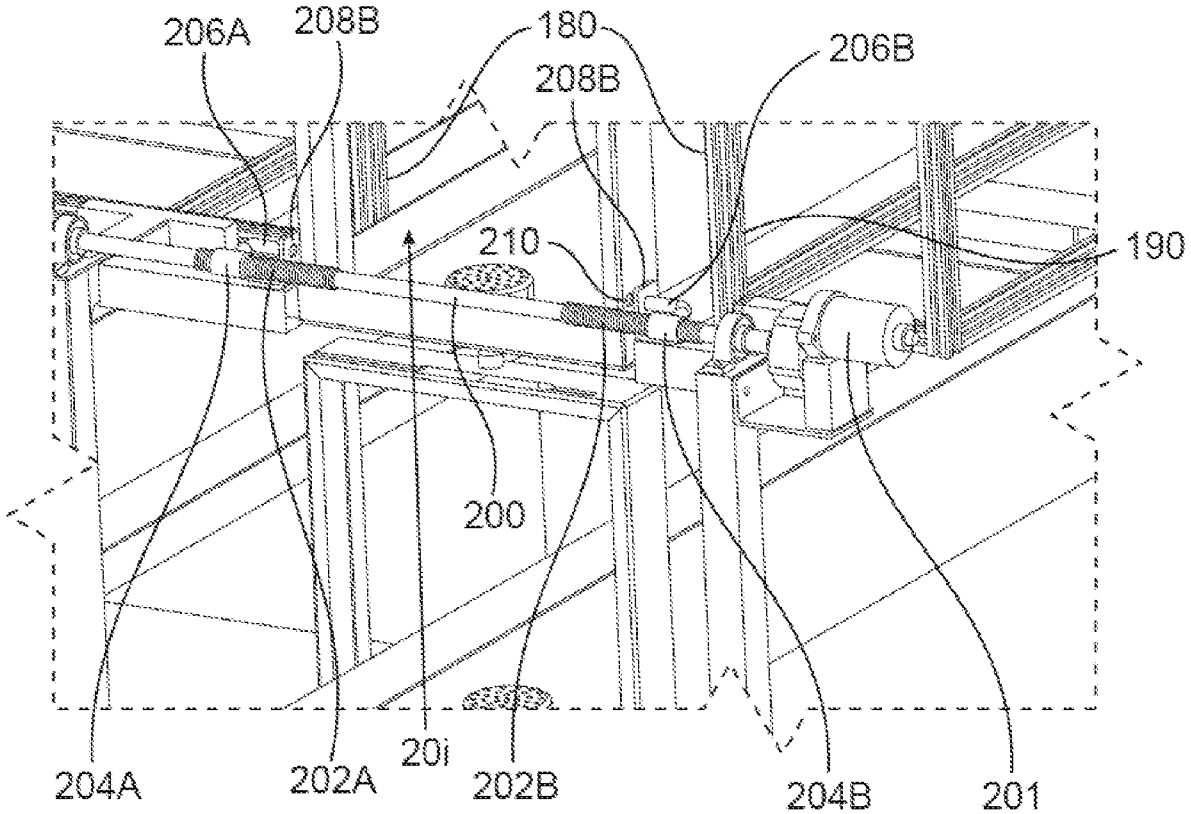

Fig. 12B

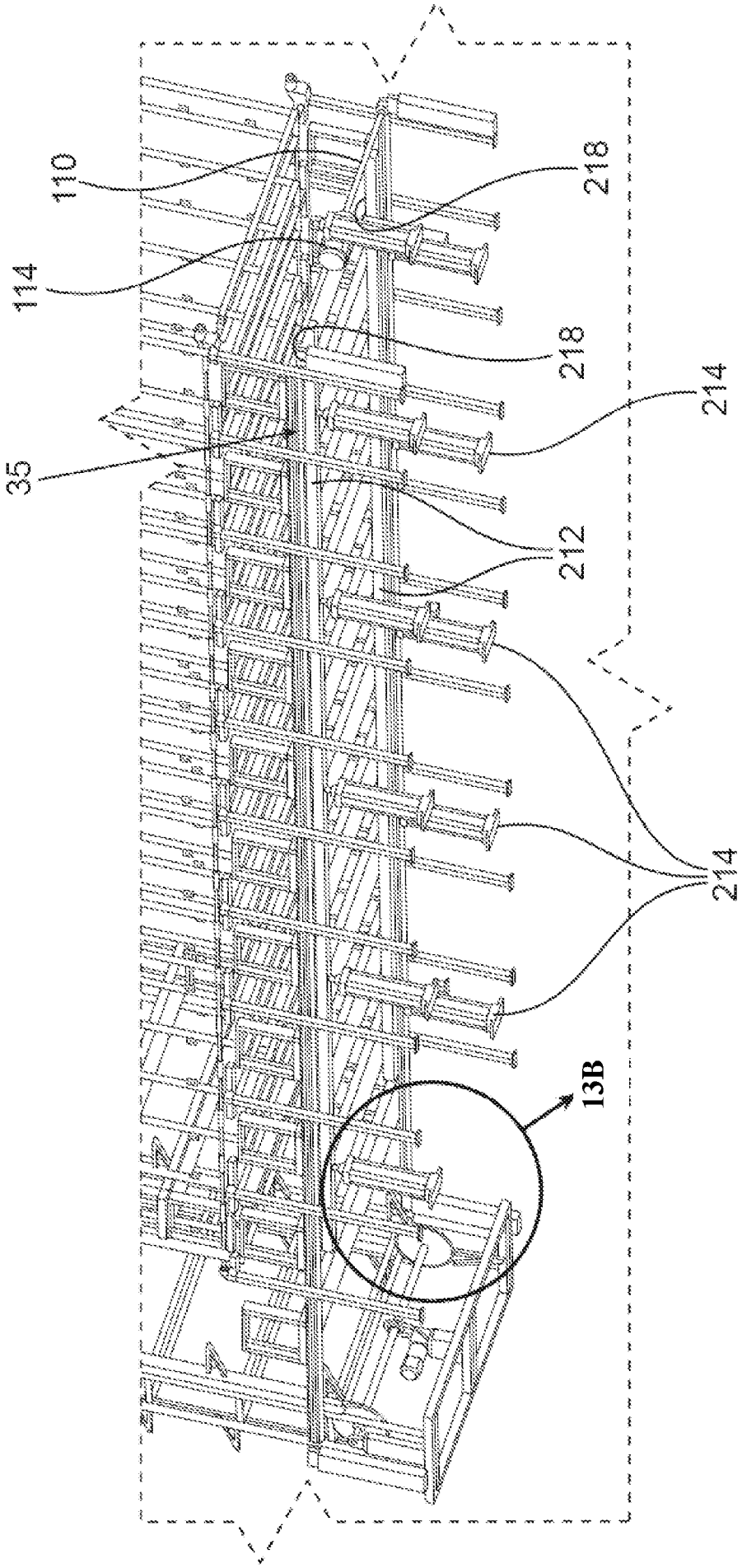

Fig. 13A

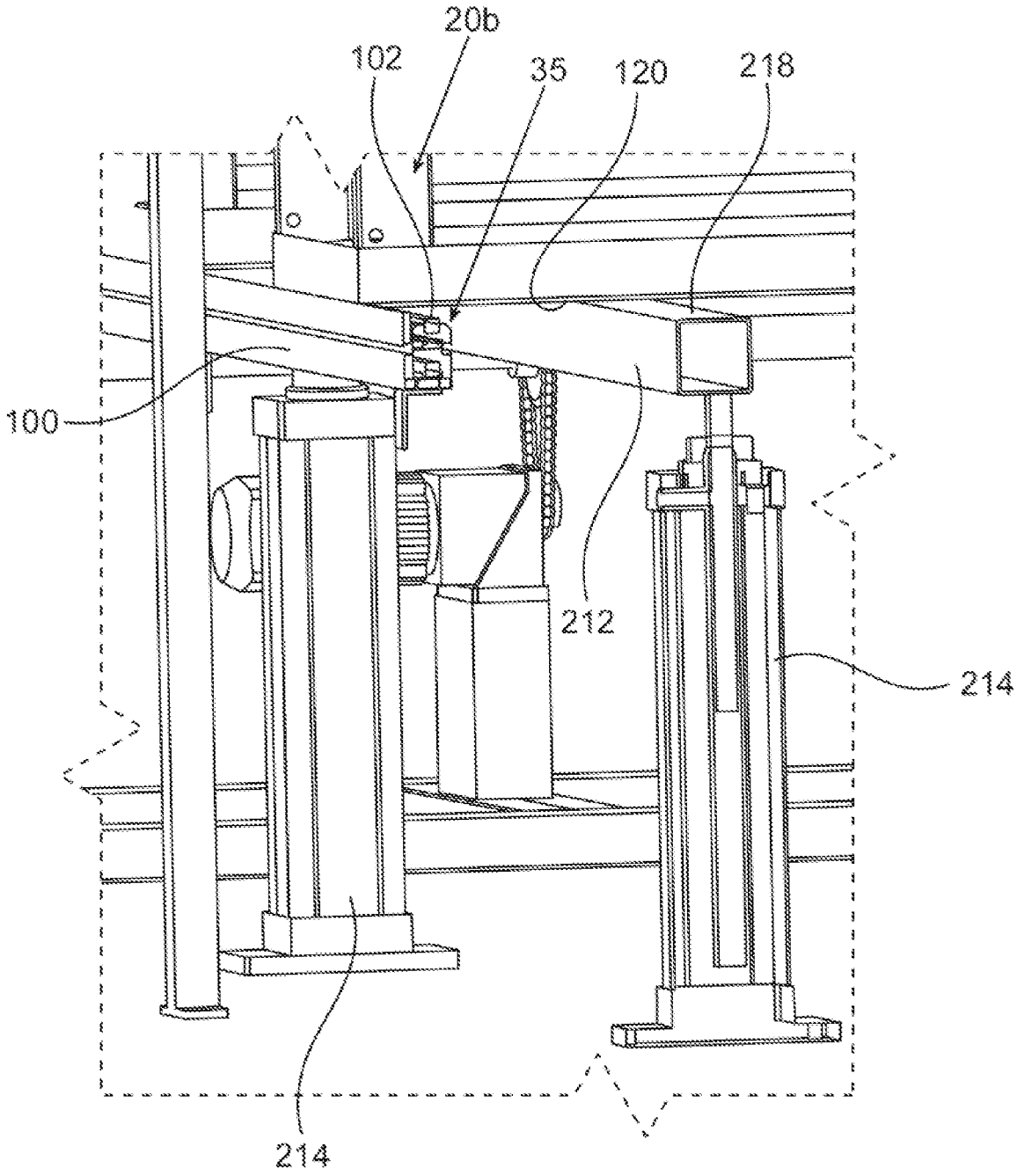

Fig. 13B

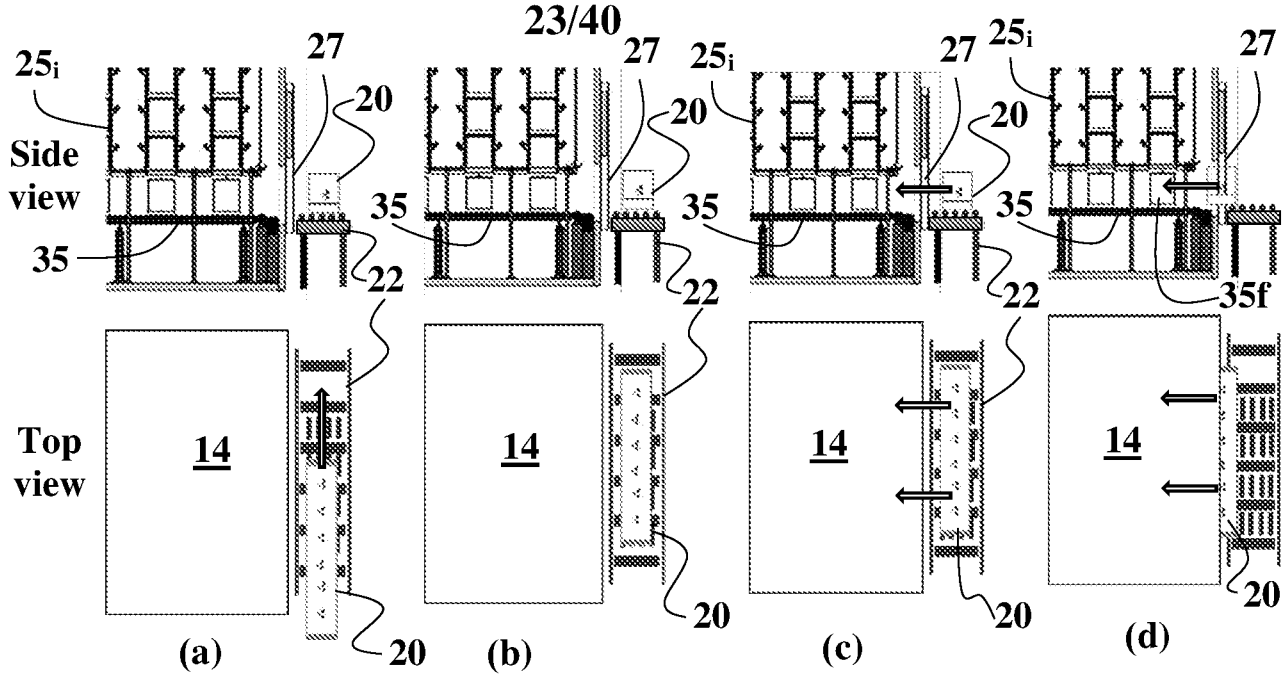

Fig. 14

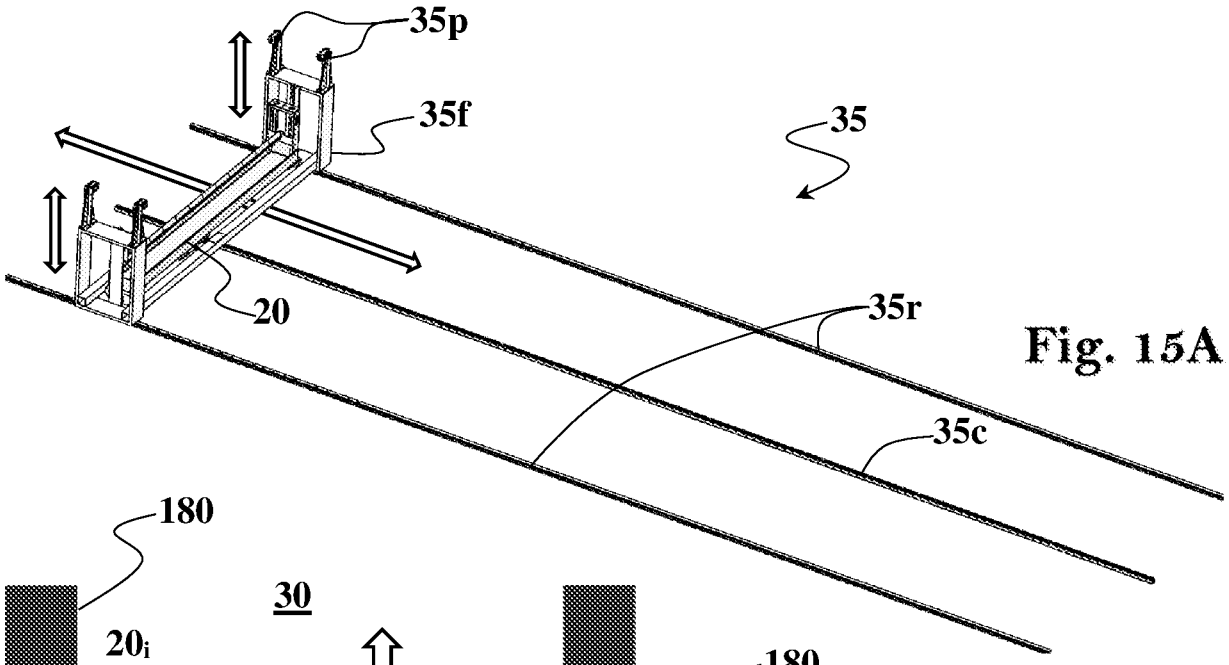

Fig. 15A

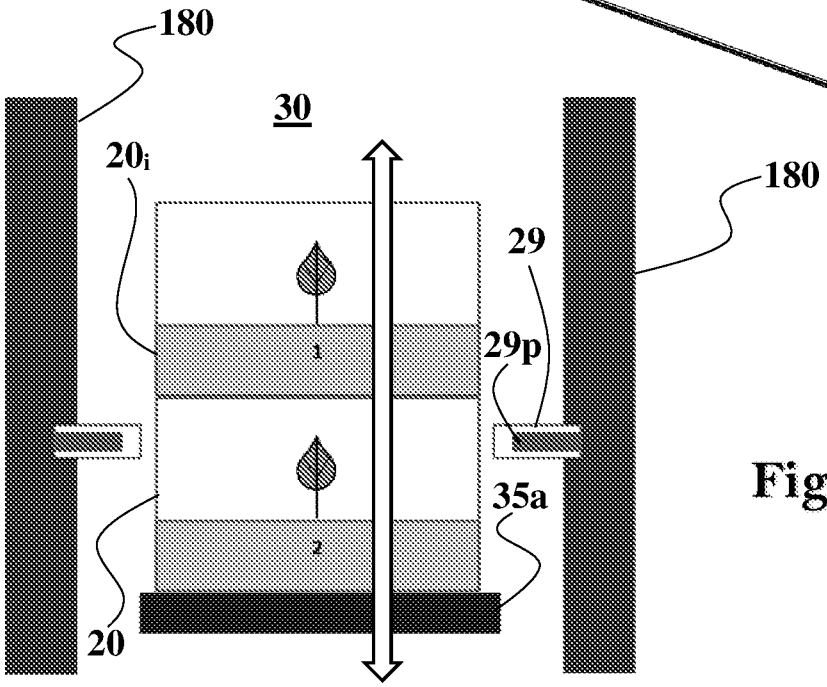

Fig. 15B

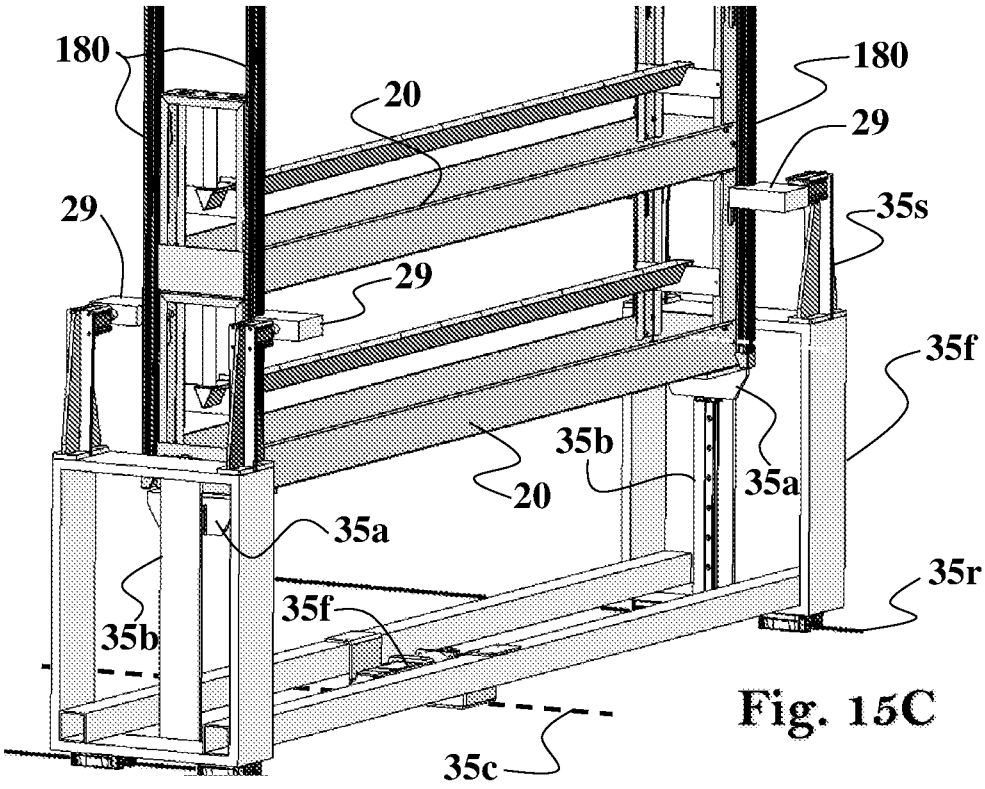

Fig. 15C

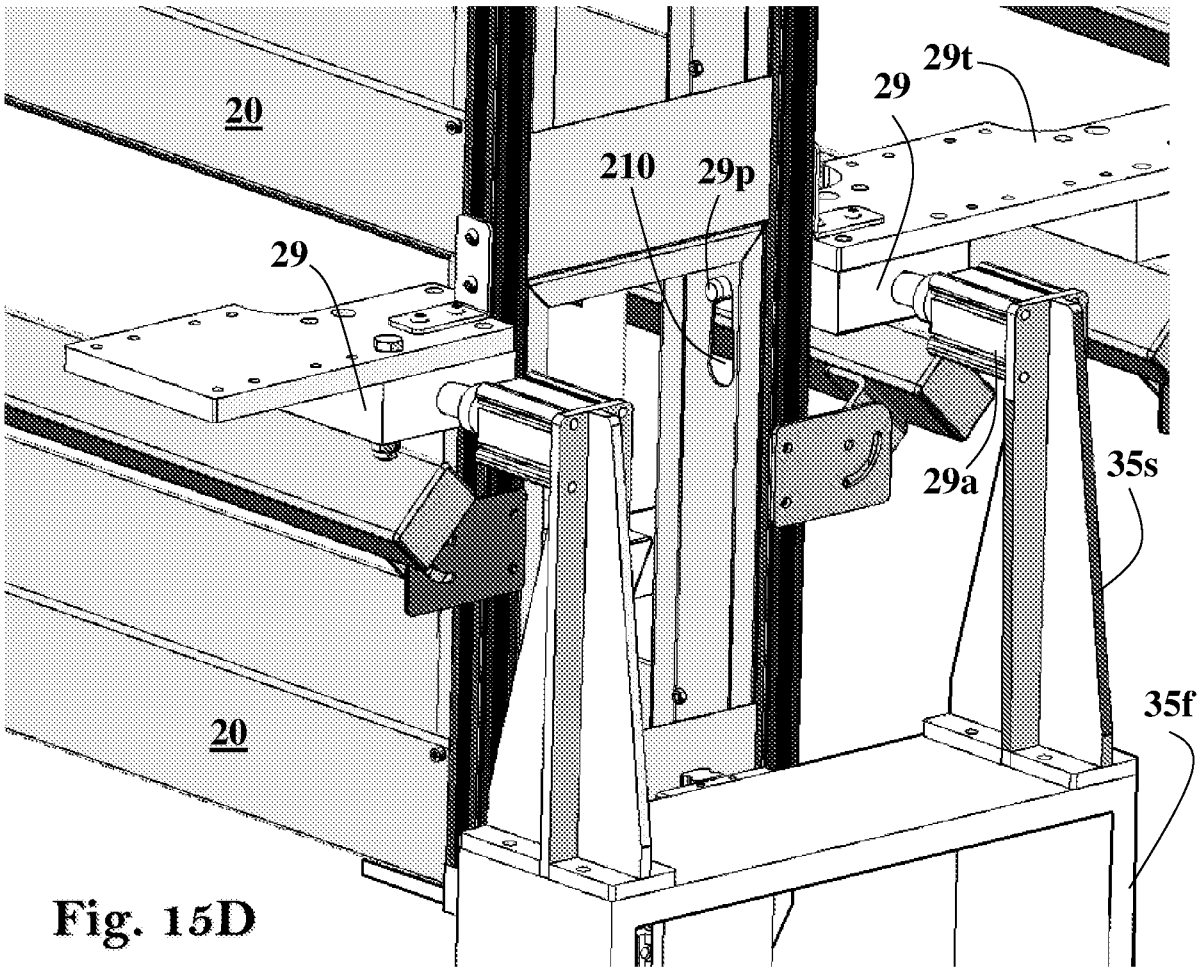

Fig. 15D

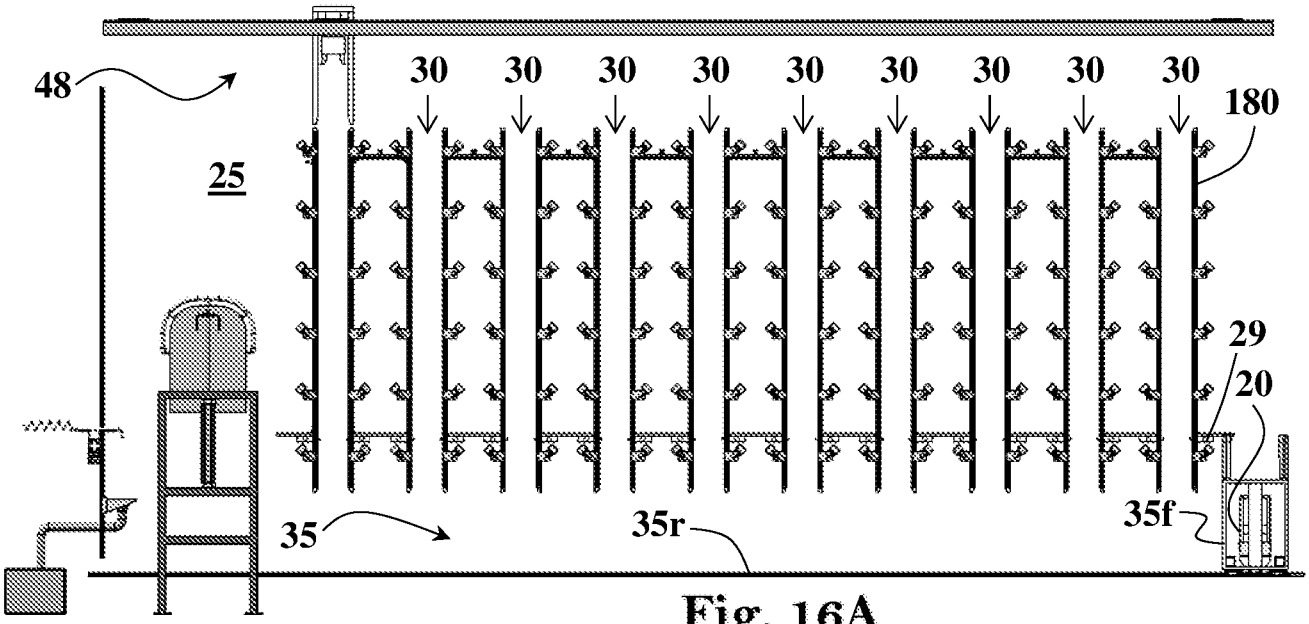

Fig. 16A

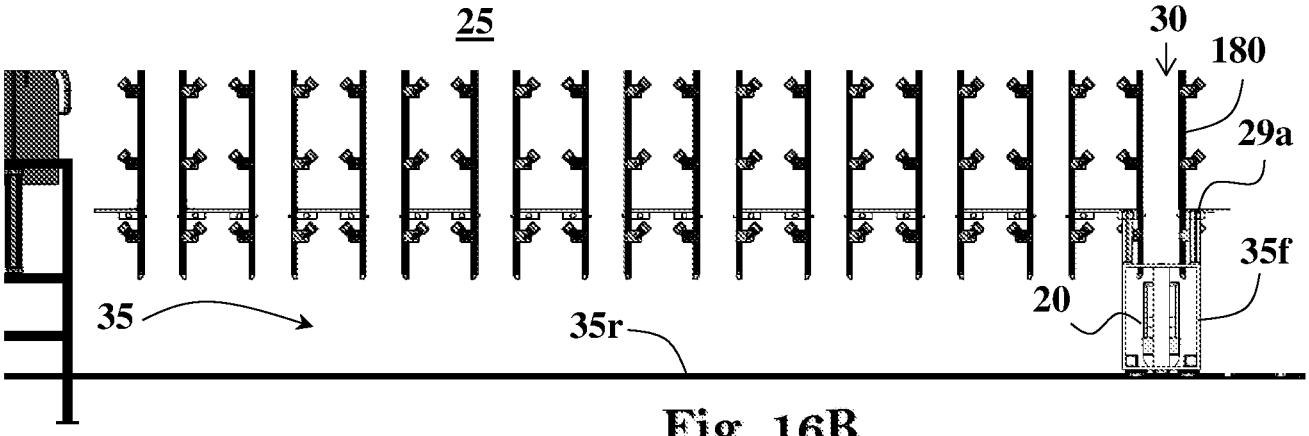

Fig. 16B

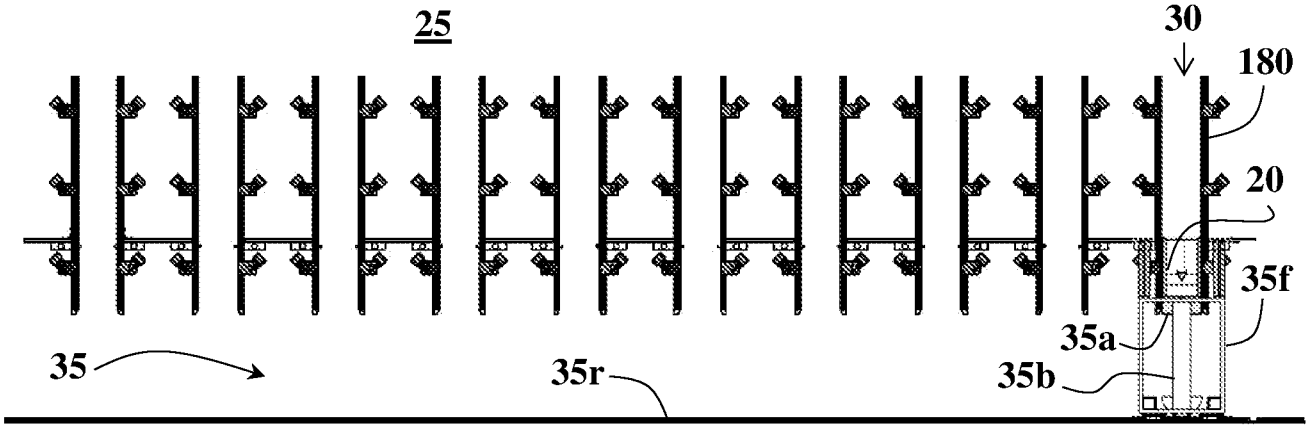

Fig. 16C

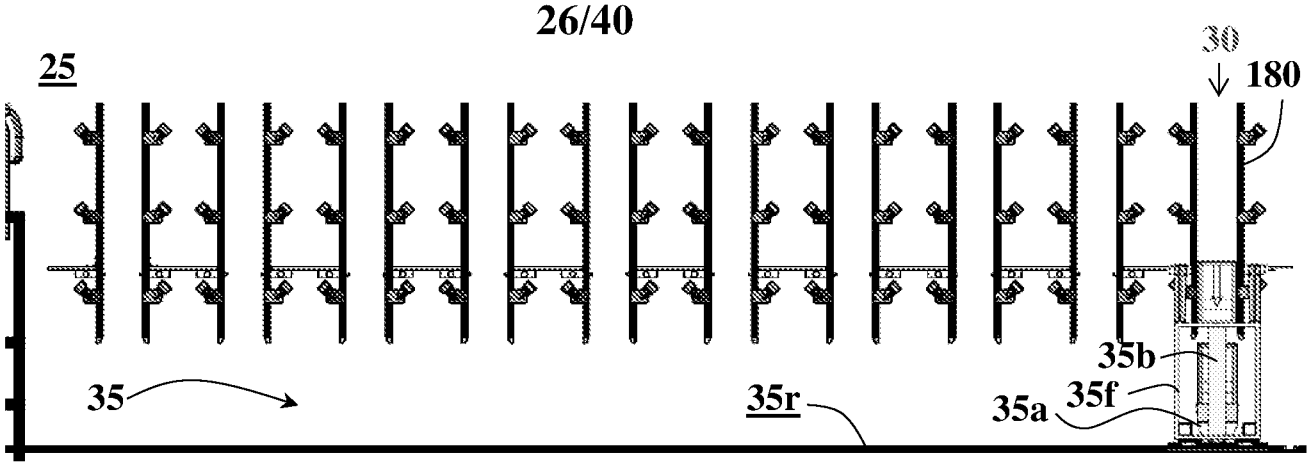

Fig. 16D

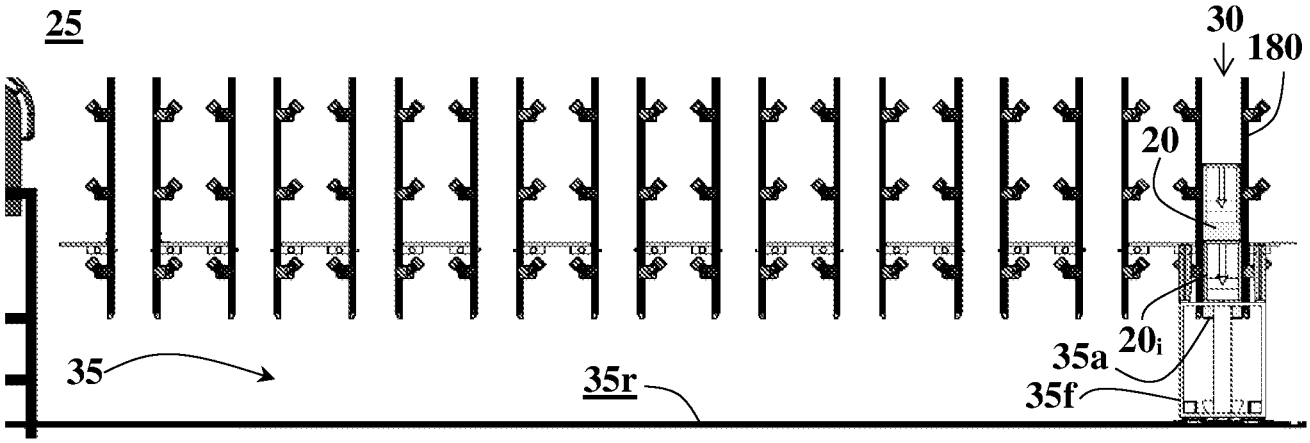

Fig. 16E

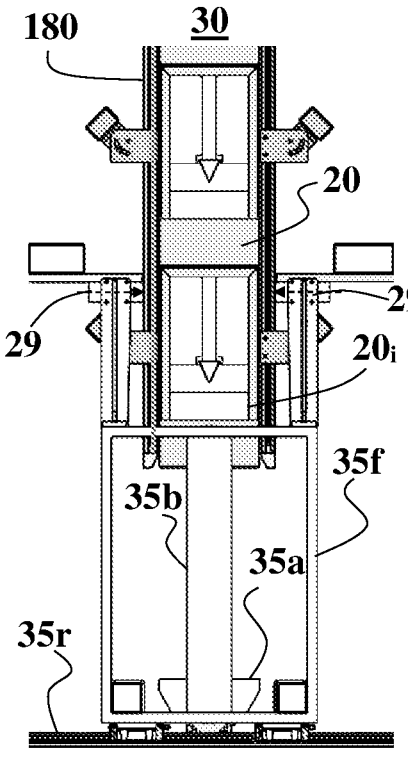

Fig. 17A

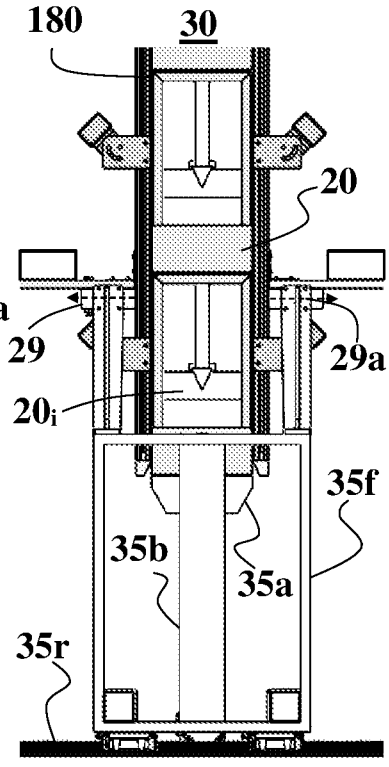

Fig. 17B

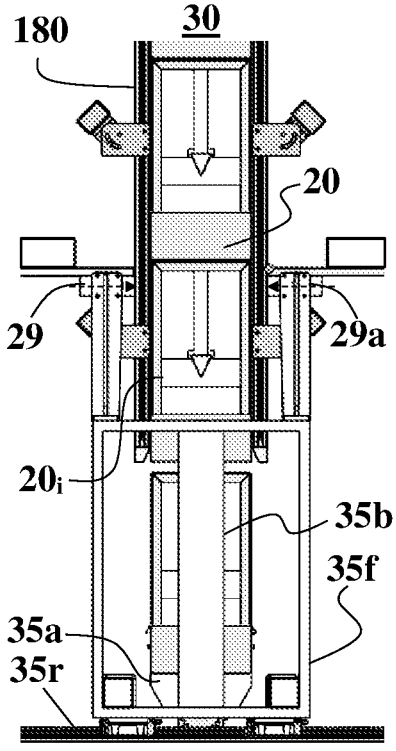

Fig. 17C

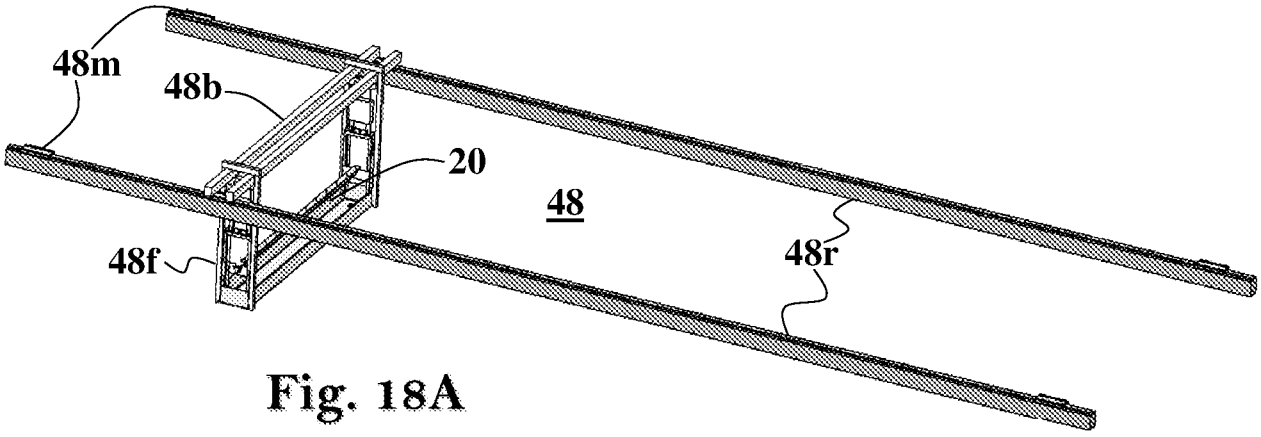

Fig. 18A

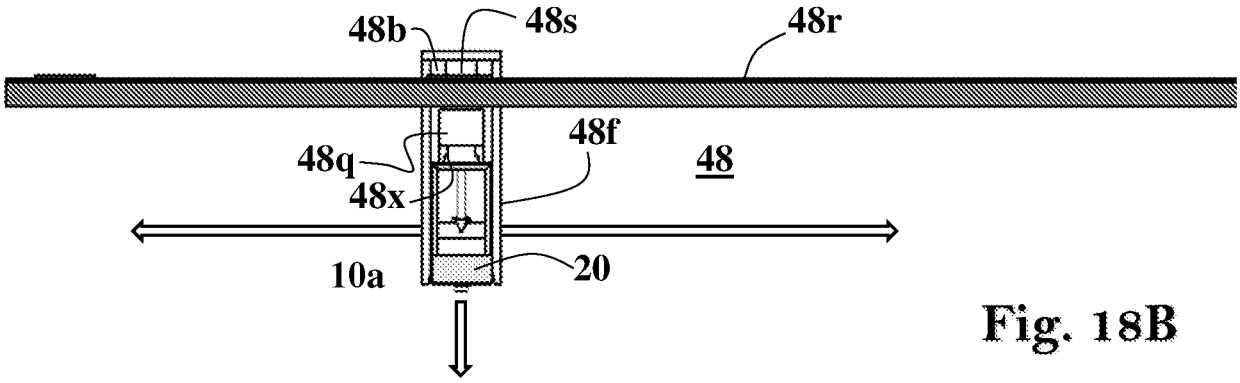

Fig. 18B

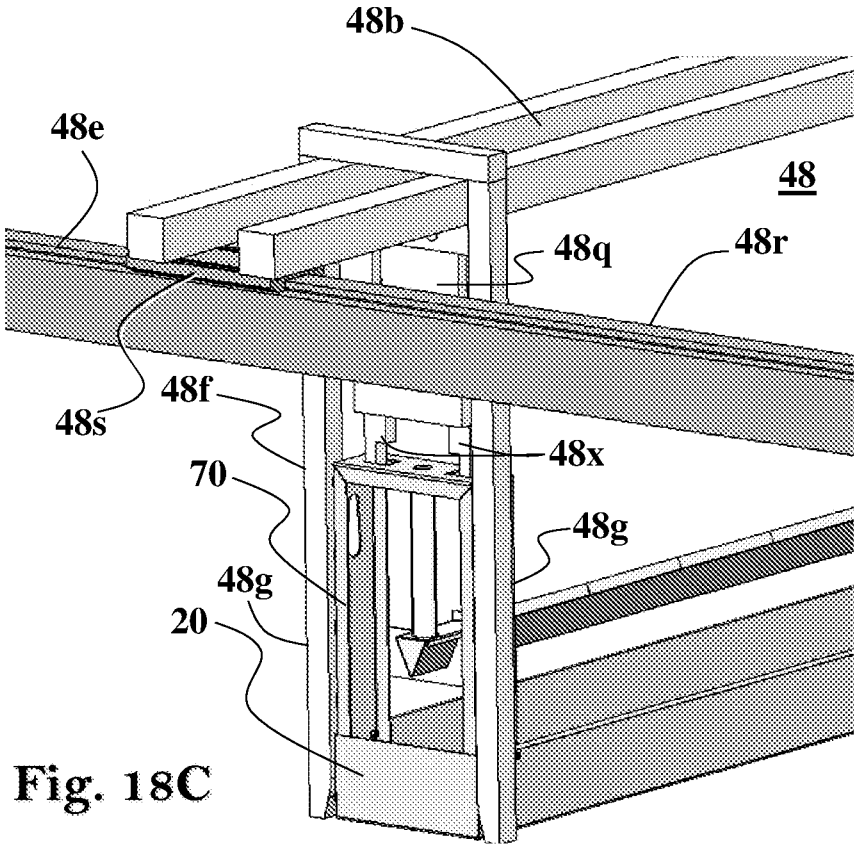

Fig. 18C

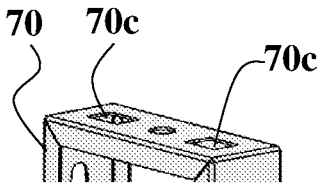

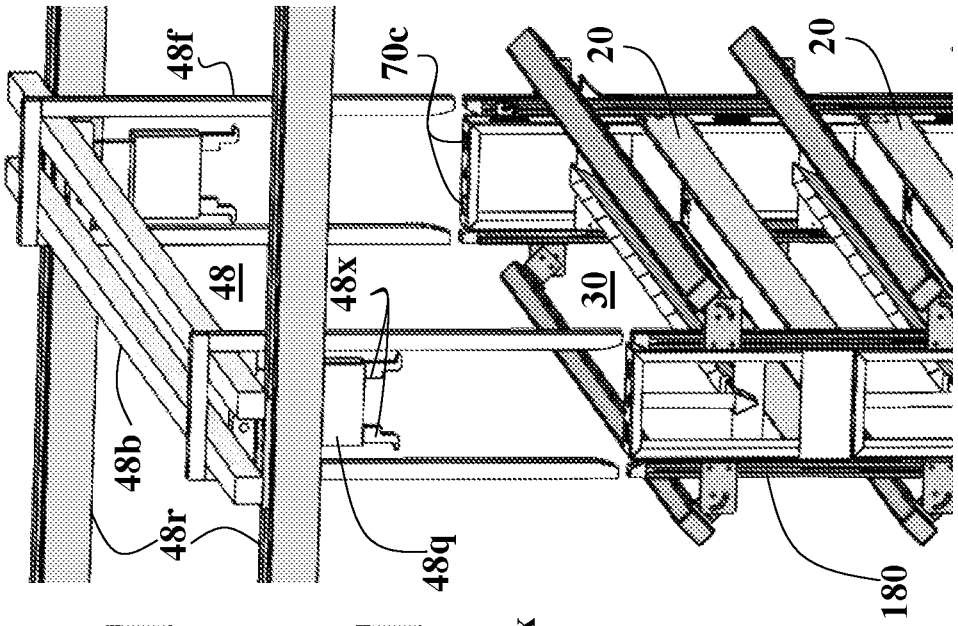

Fig. 18F

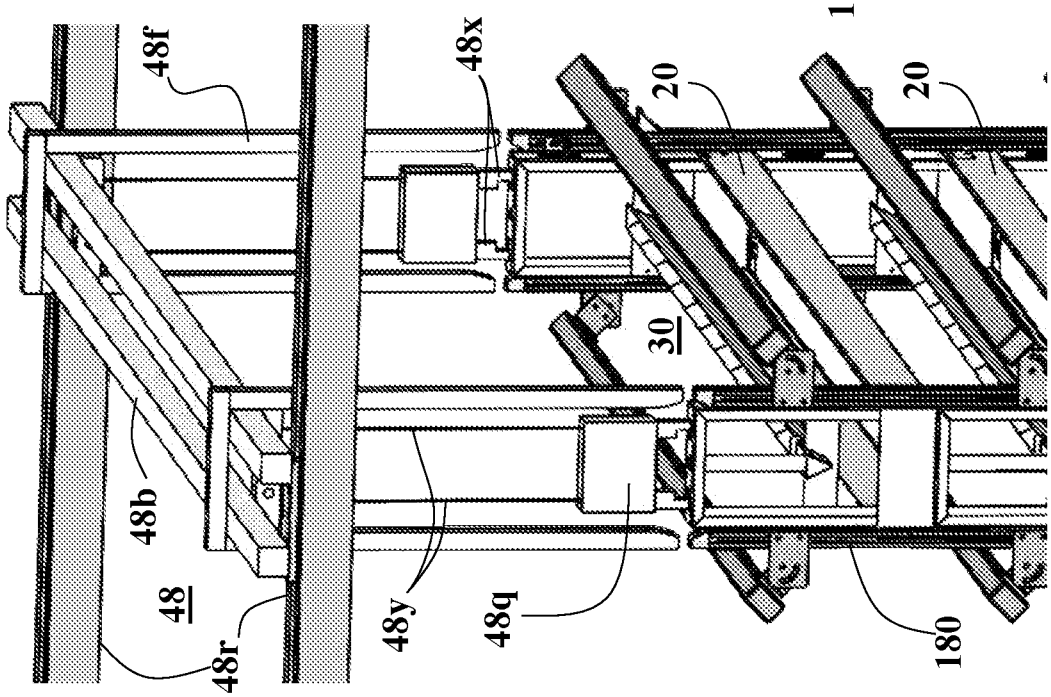

Fig. 18E

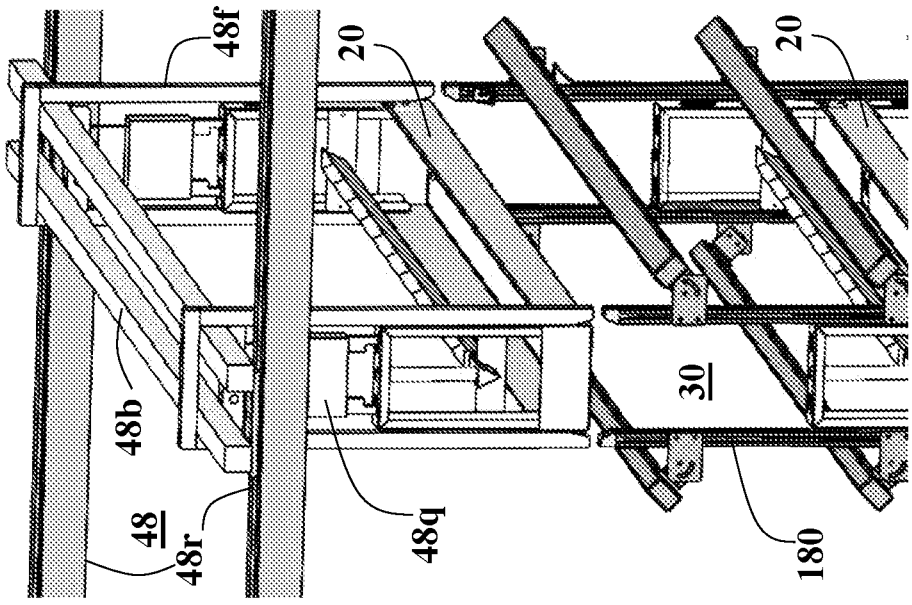

Fig. 18D

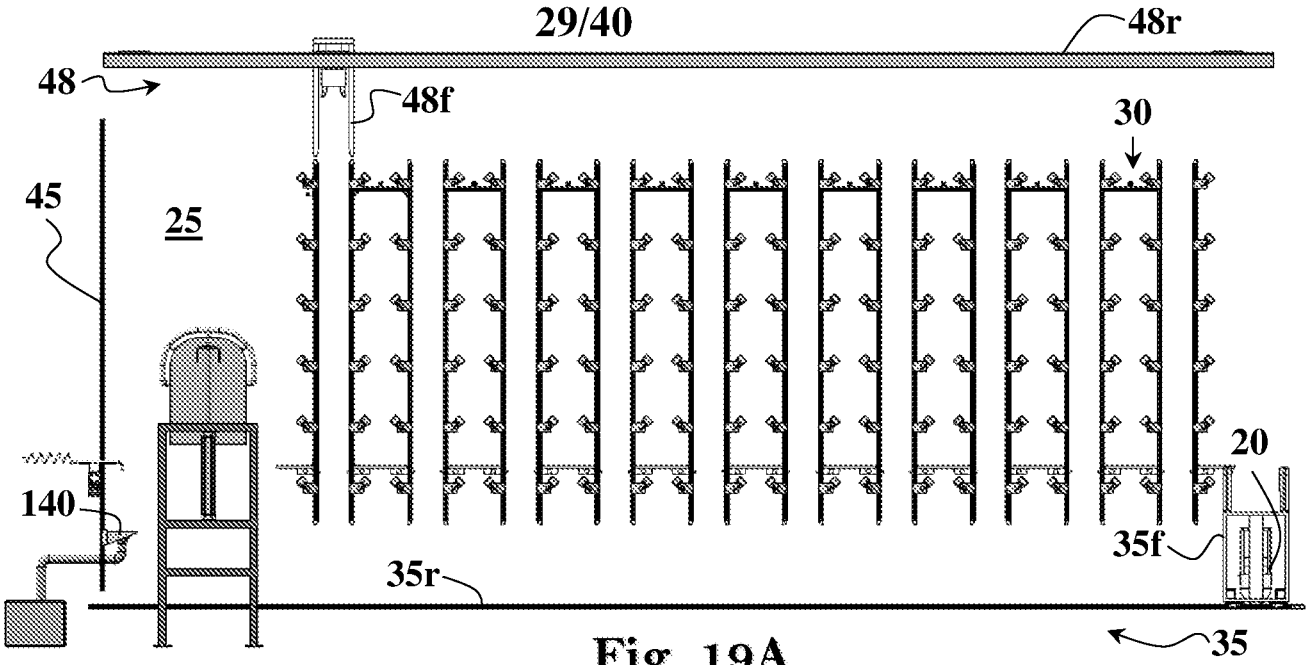

Fig. 19A

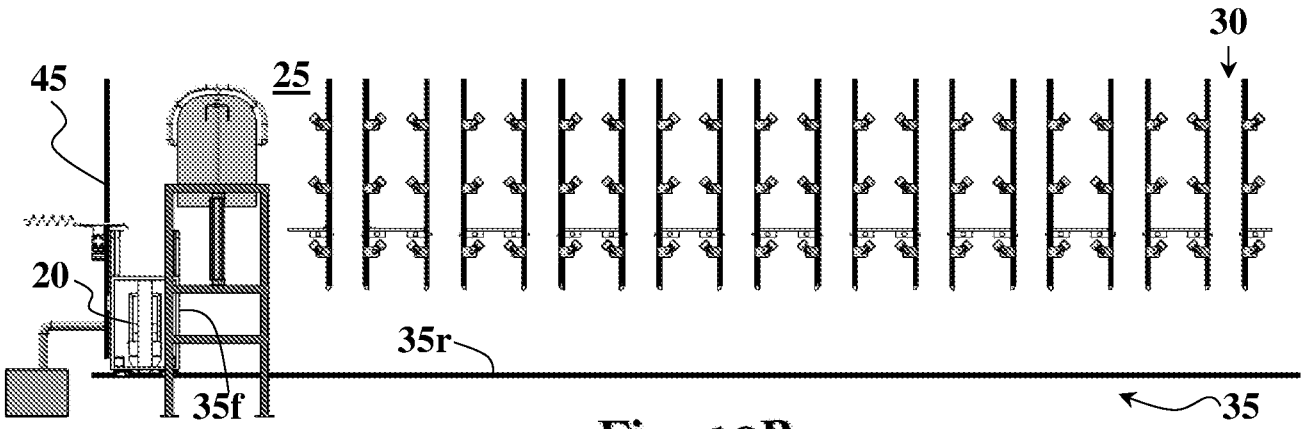

Fig. 19B

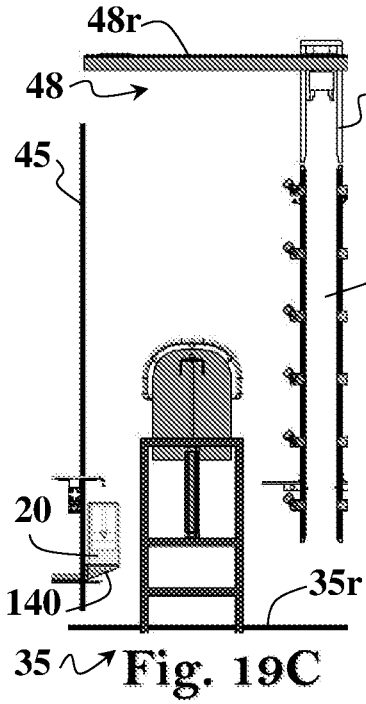

Fig. 19C

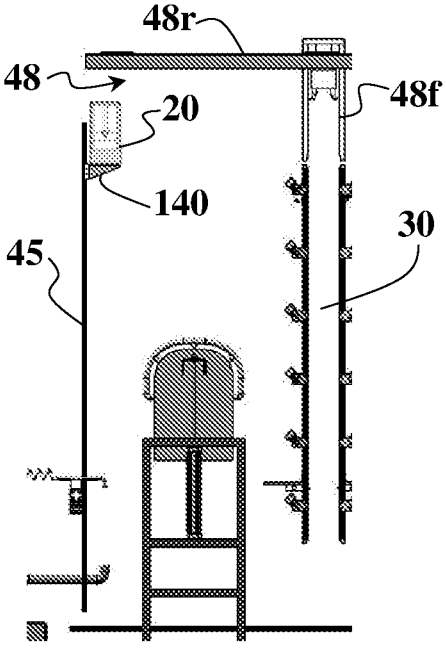

Fig. 19D

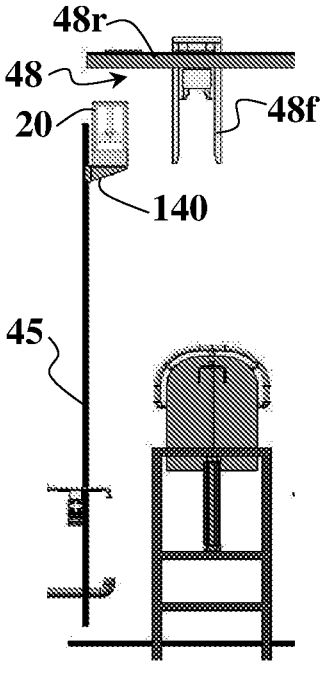

Fig. 19E

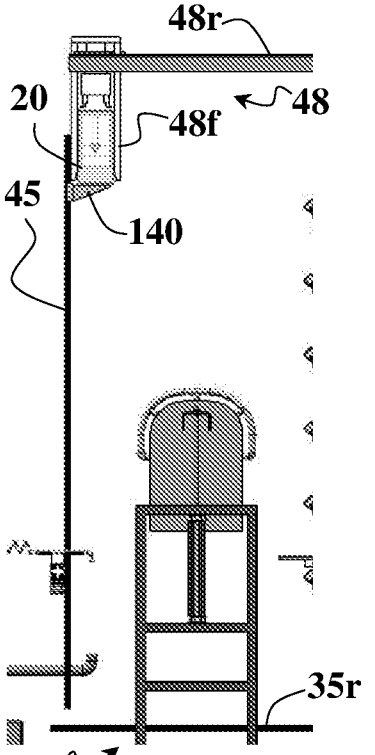

Fig. 19F

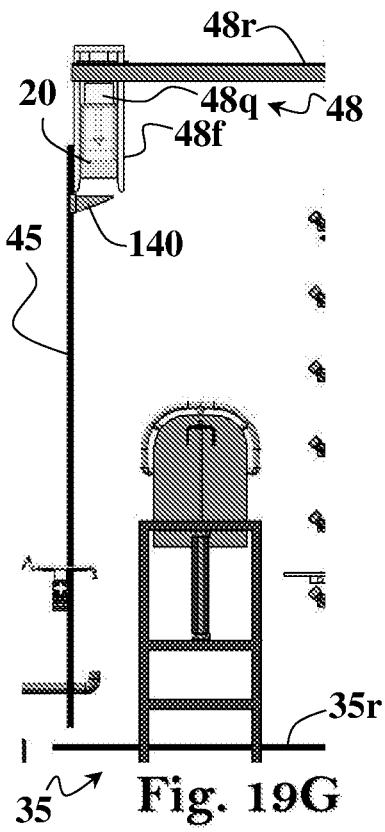

Fig. 19G

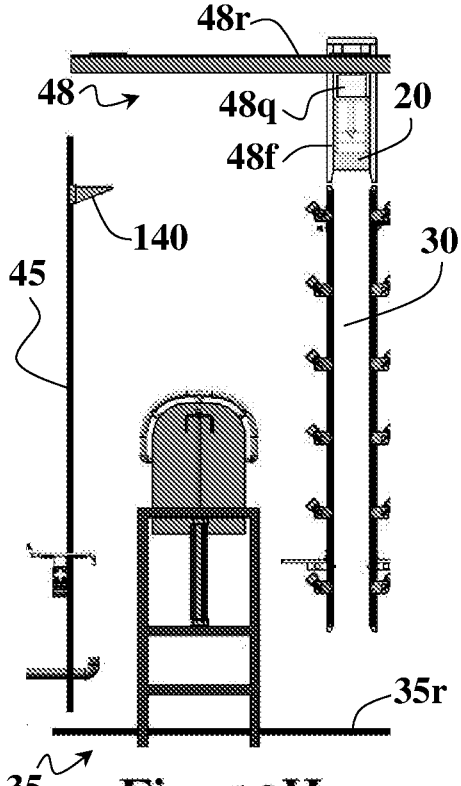

Fig. 19H

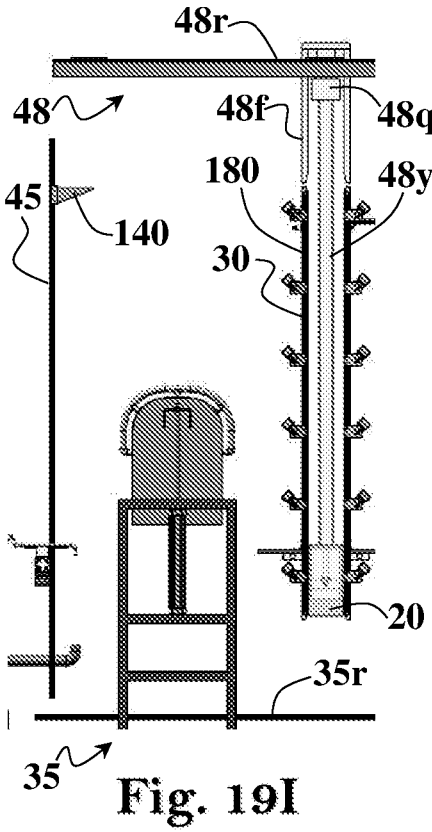

Fig. 19I

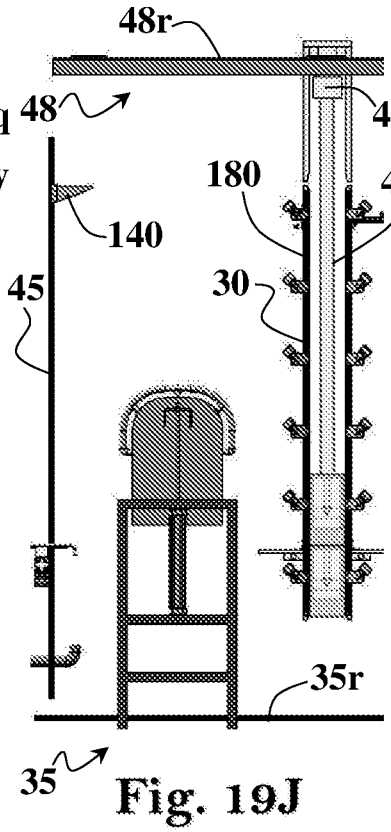

Fig. 19J

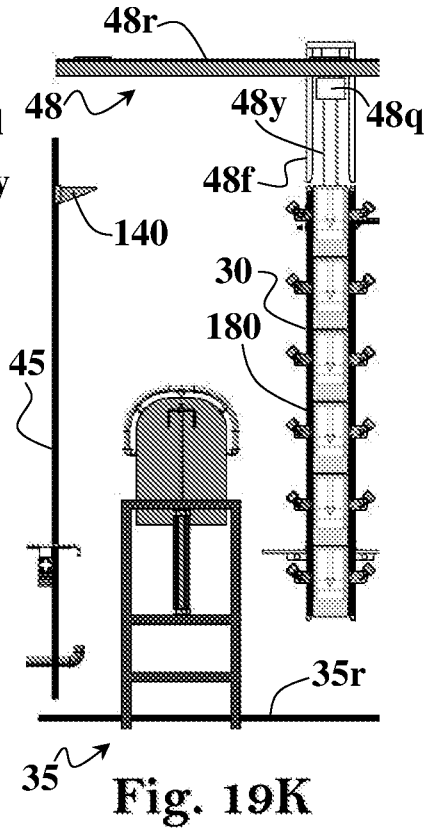

Fig. 19K

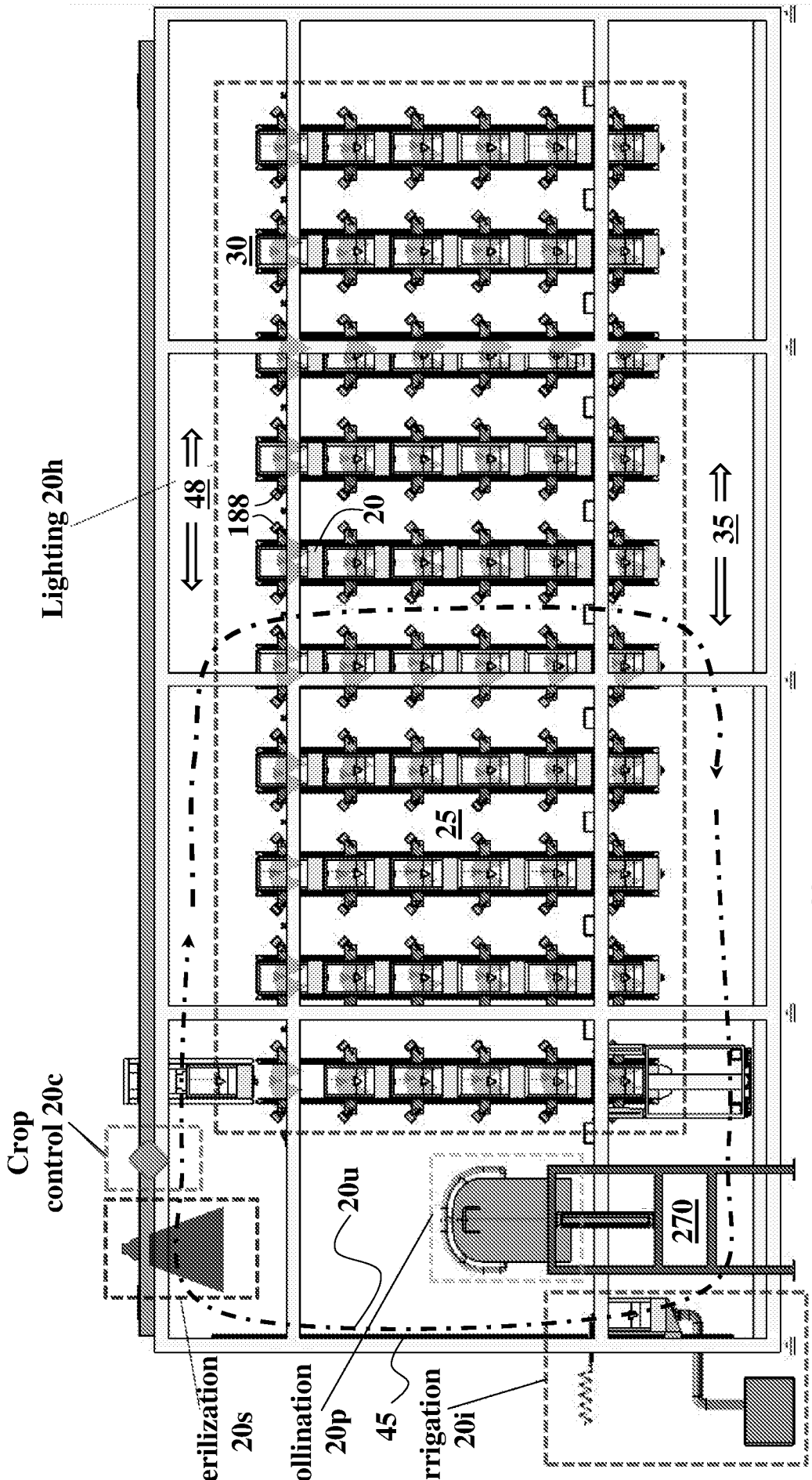
Lighting 20h
48
188
20
30
35
25
20g
Crop control 20c
Sterilization 20s
Pollination 20p
20u
45
Irrigation 20i
270
77
Control unit

Fig. 20

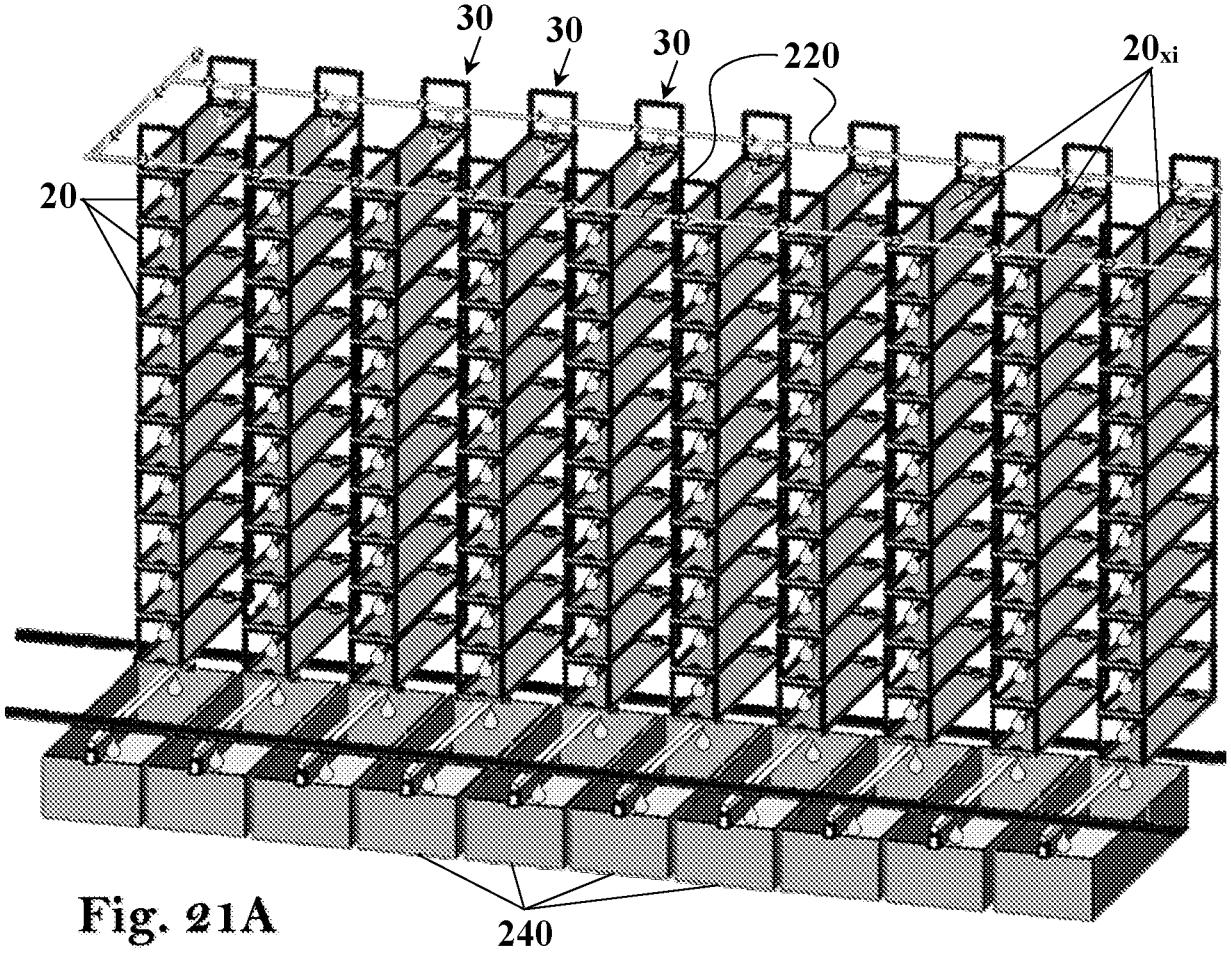

Fig. 21A

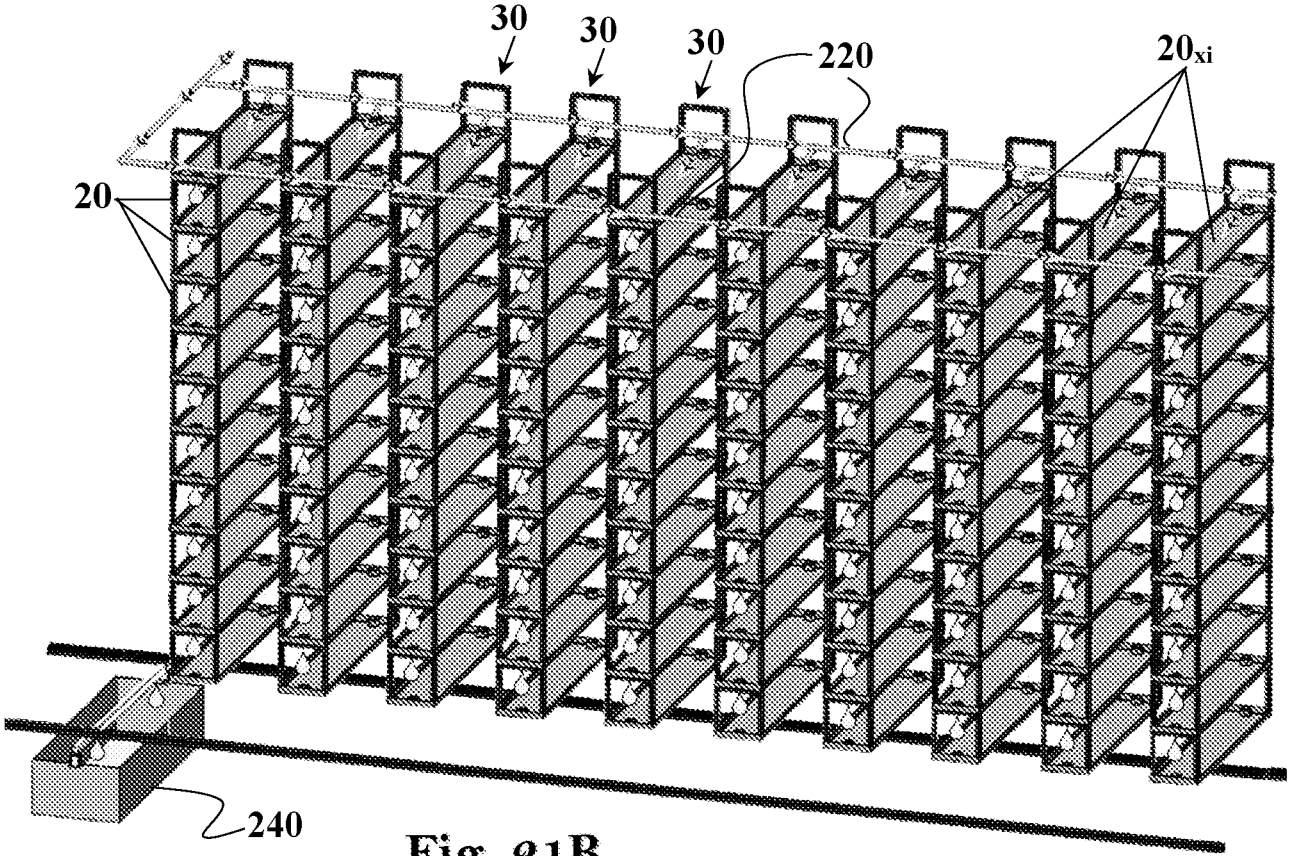

Fig. 21B

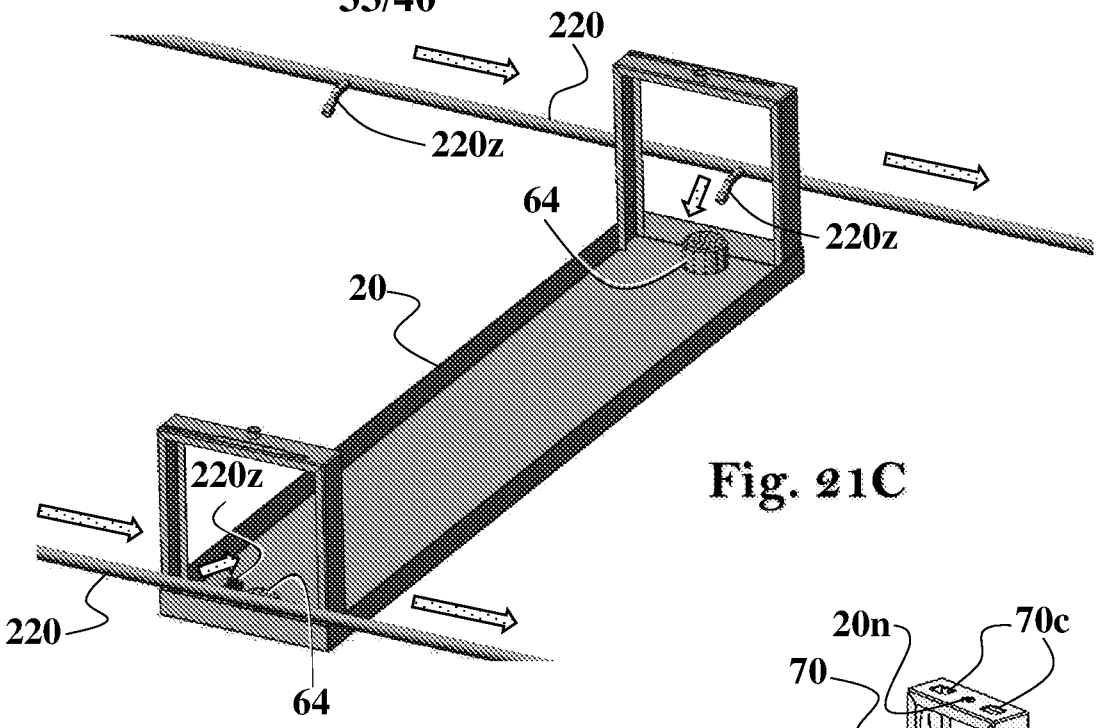

Fig. 21C

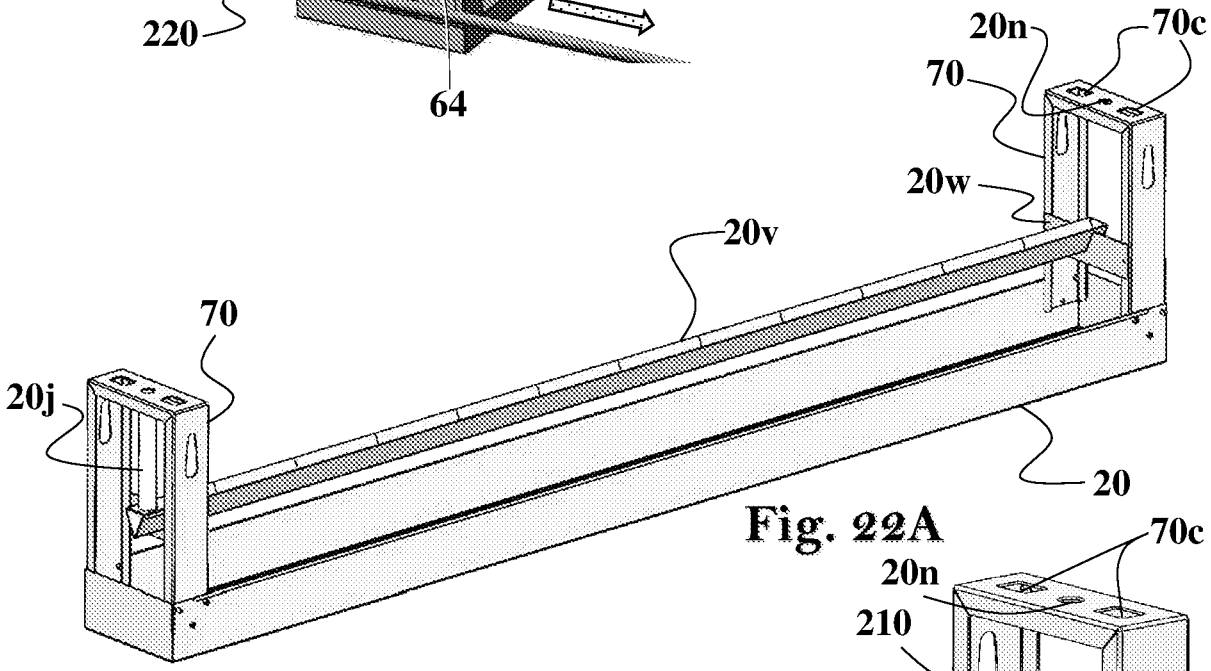

Fig. 22A

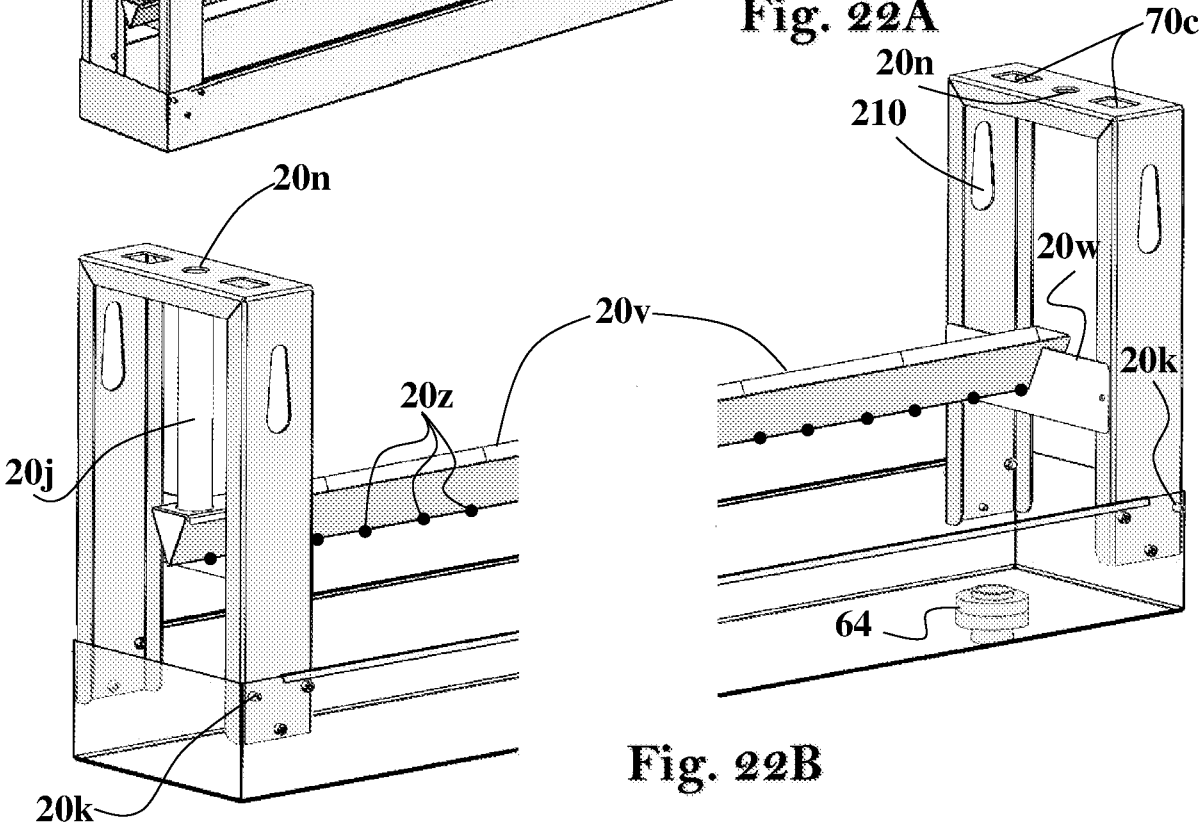

Fig. 22B

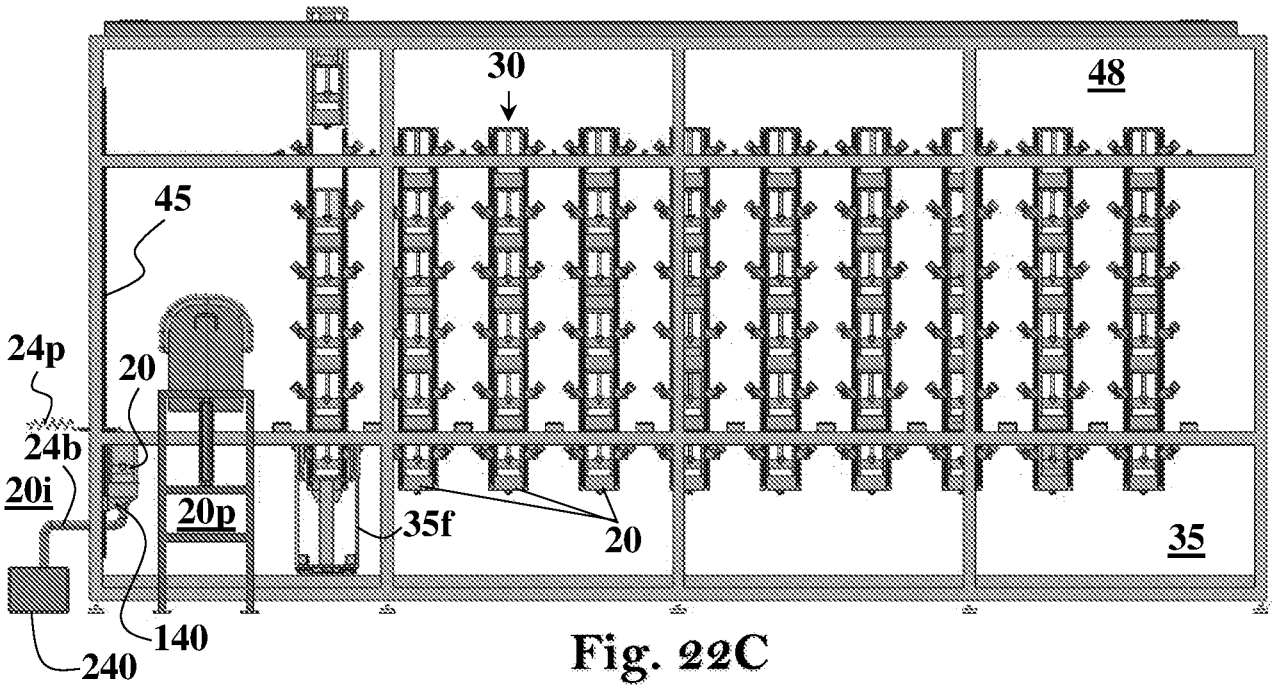

Fig. 22C

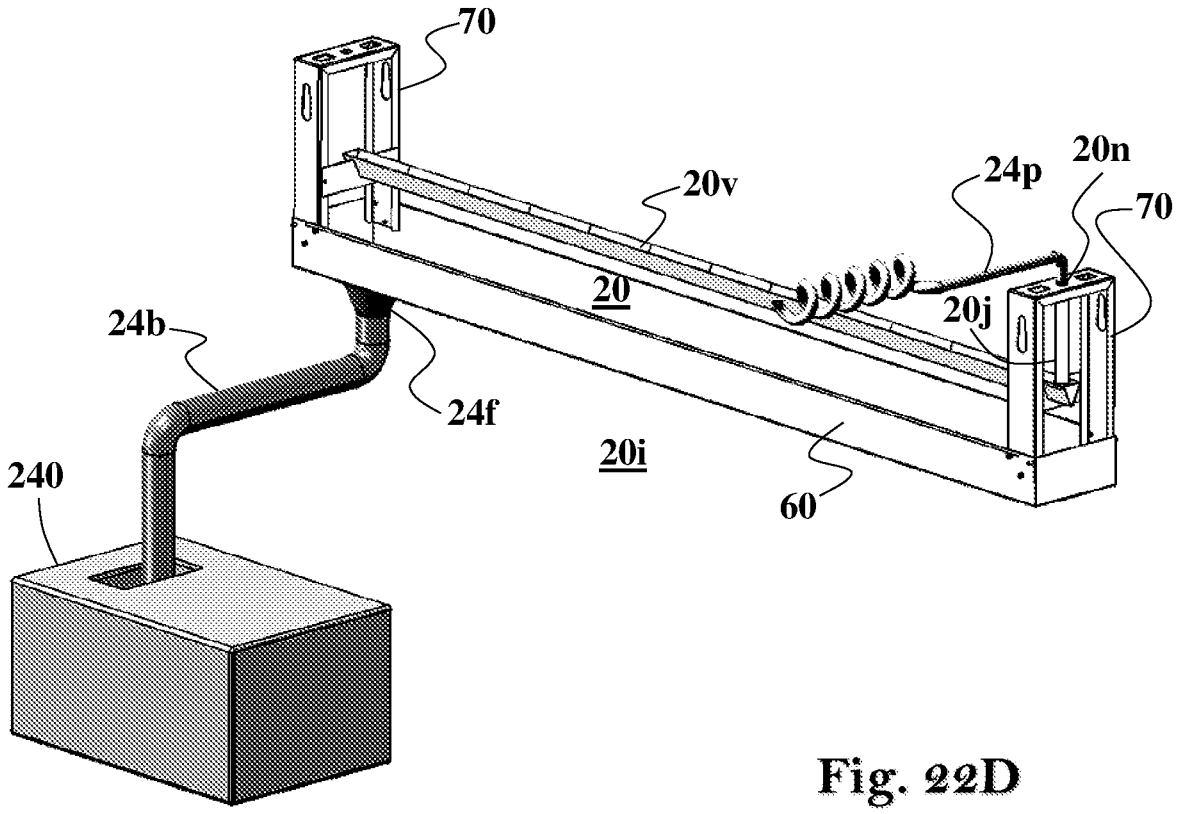

Fig. 22D

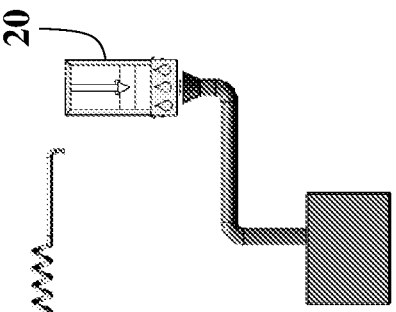

Fig. 22H

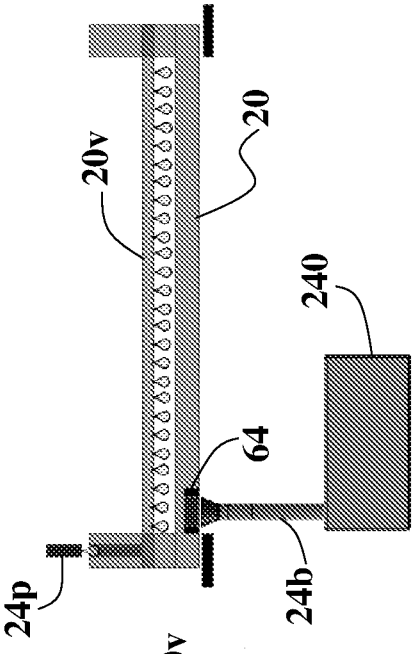

Fig. 22G

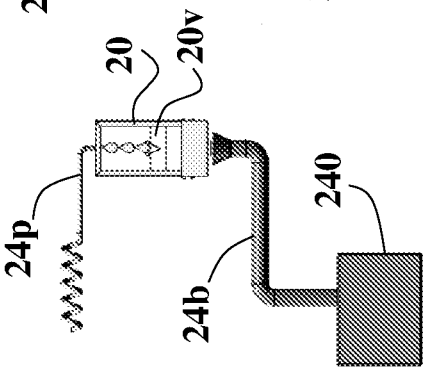

Fig. 22F

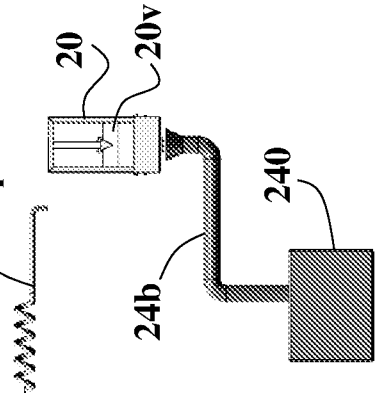

Fig. 22E

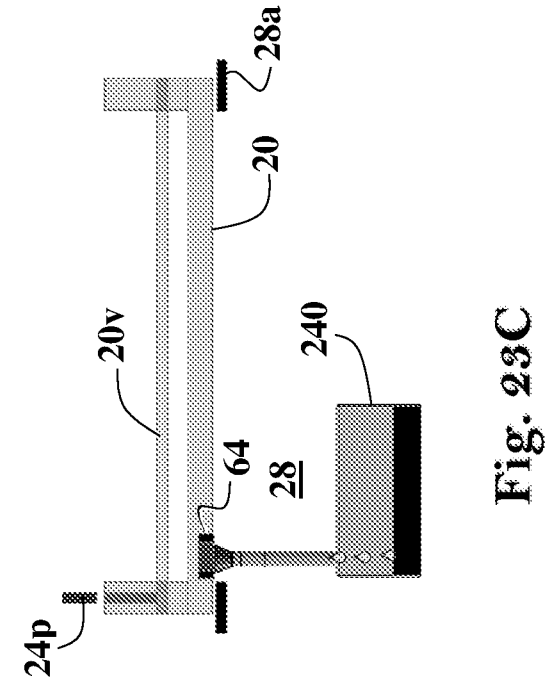

Fig. 23C

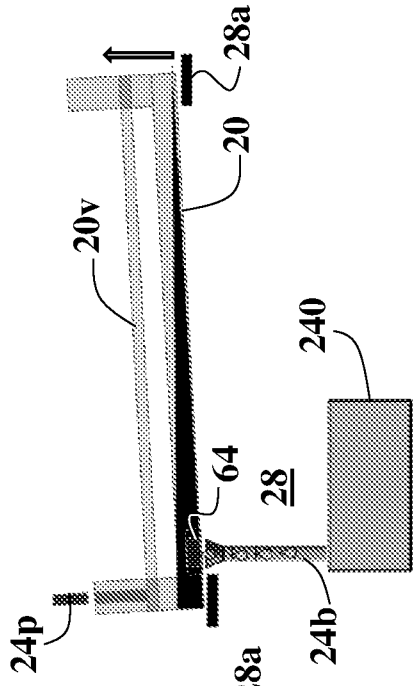

Fig. 23B

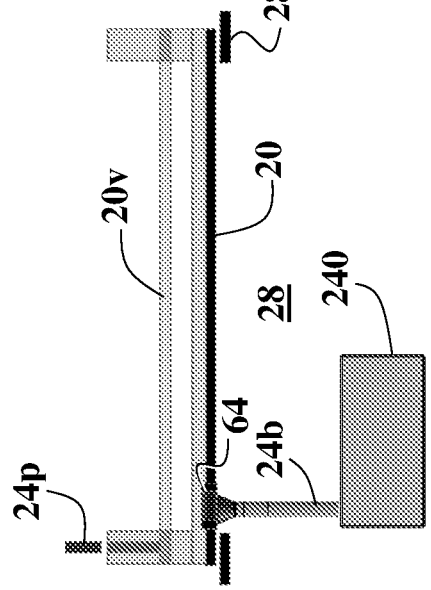

Fig. 23A

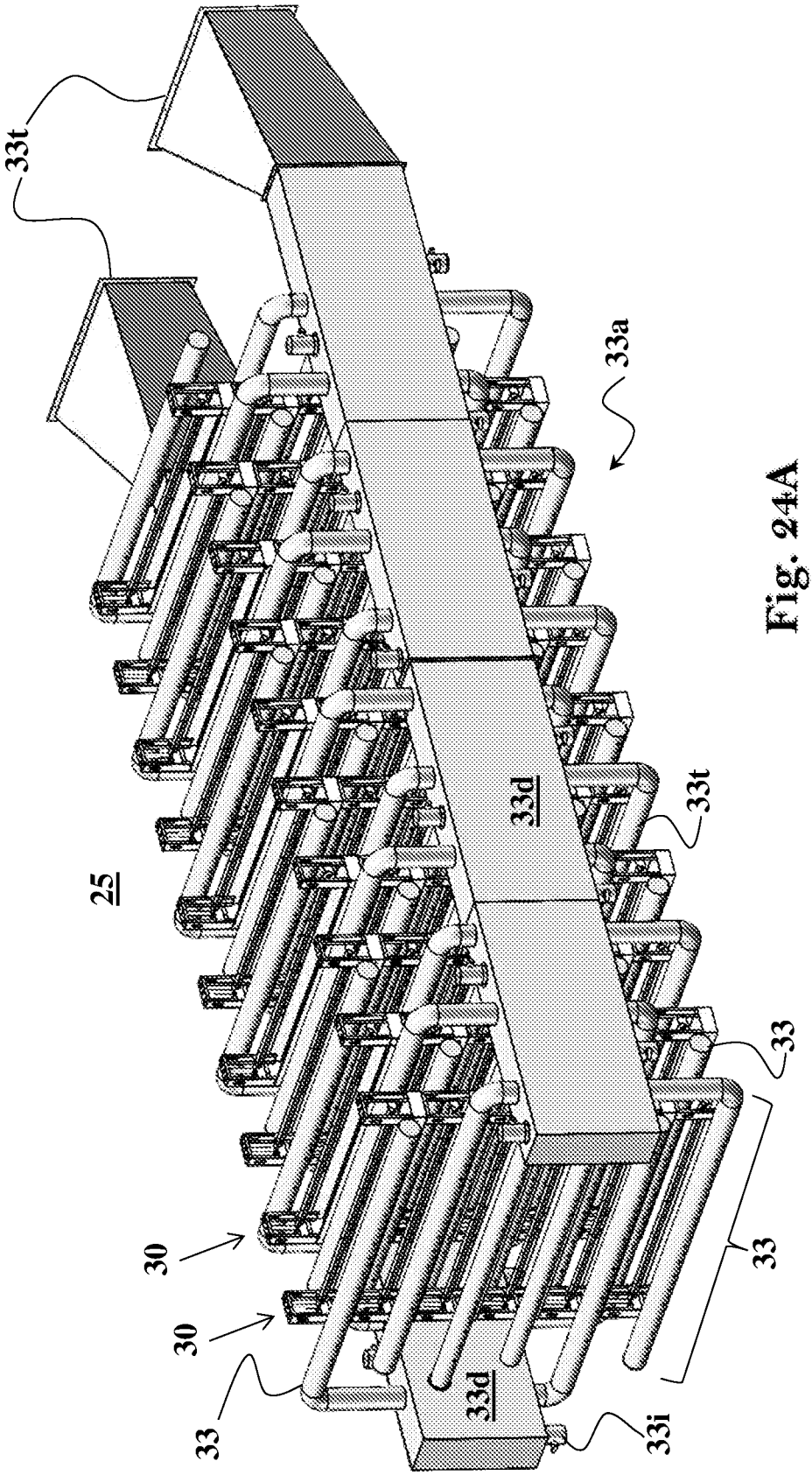

Fig. 24A

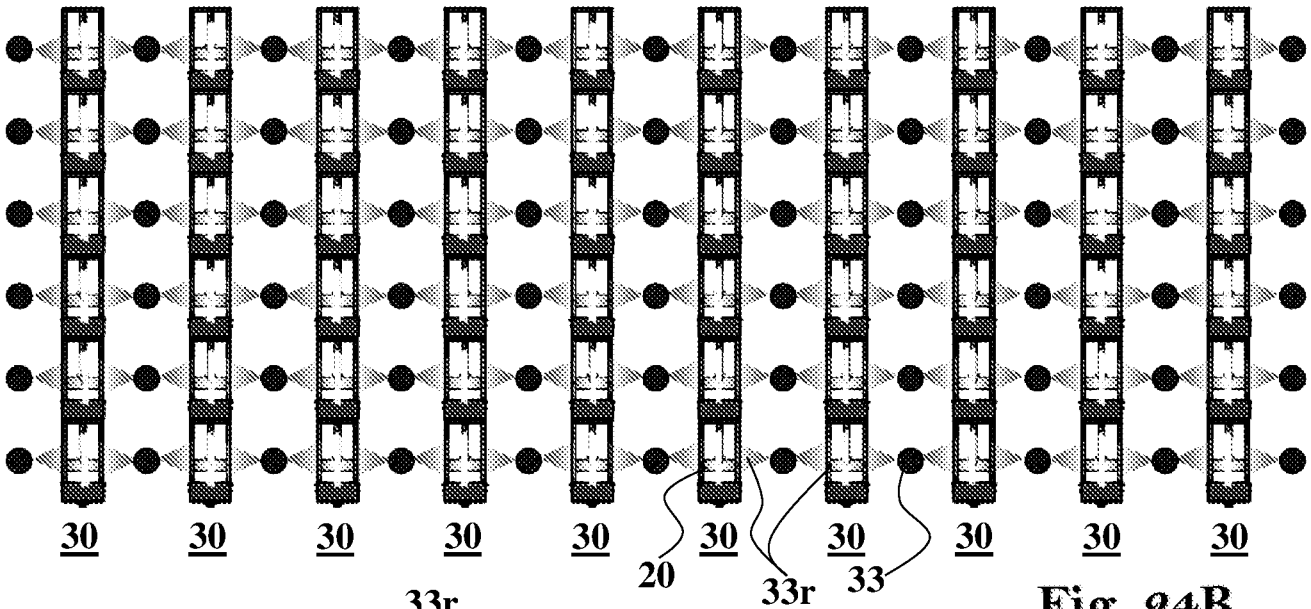

Fig. 24B

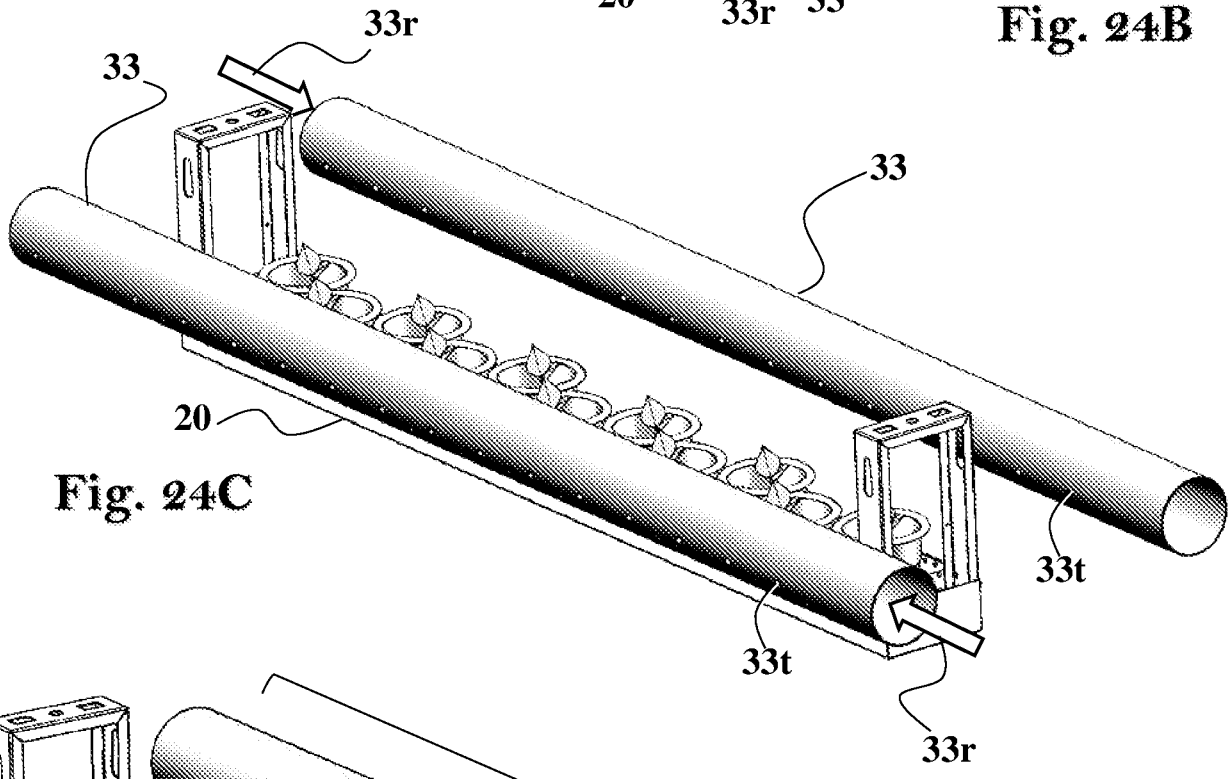

Fig. 24C

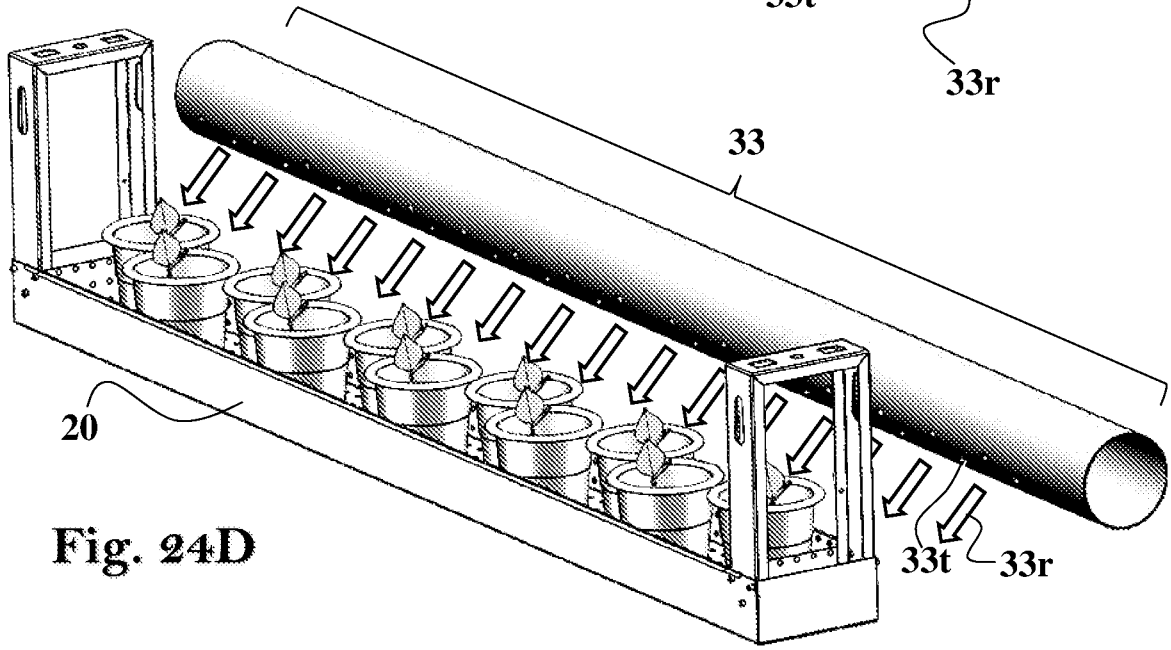

Fig. 24D

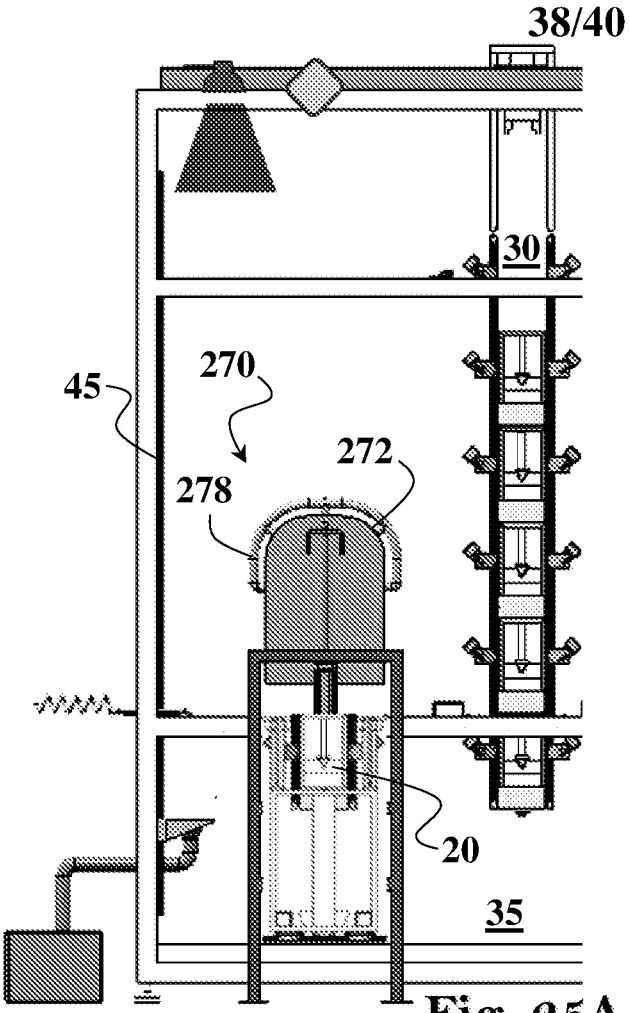

Fig. 25A

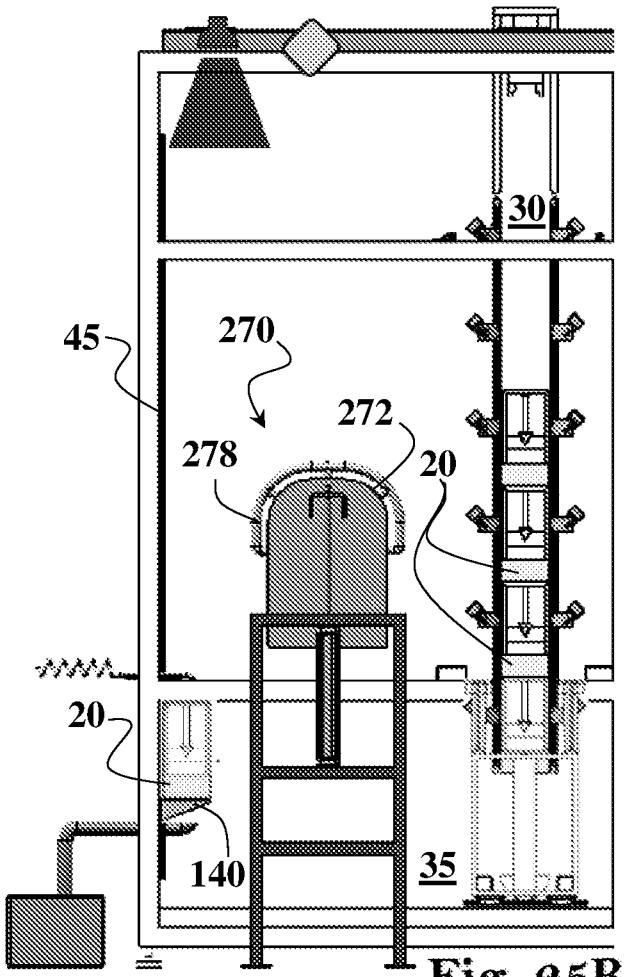

Fig. 25B

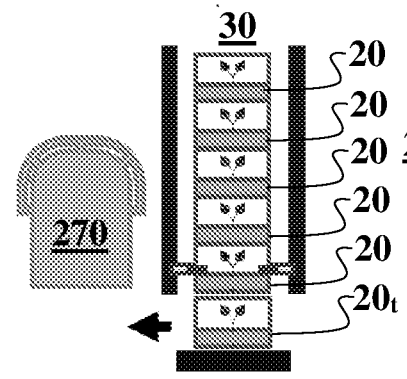

Fig. 25C

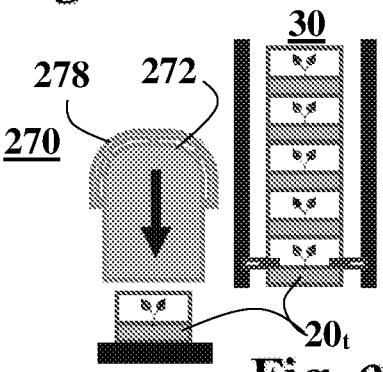

Fig. 25D

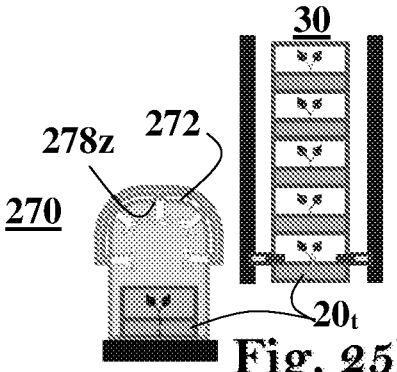

Fig. 25E

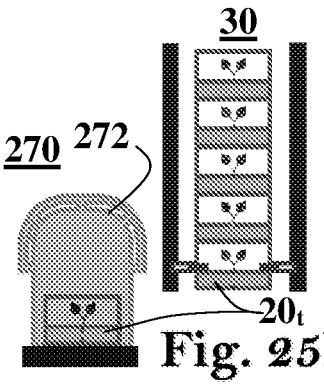

Fig. 25F

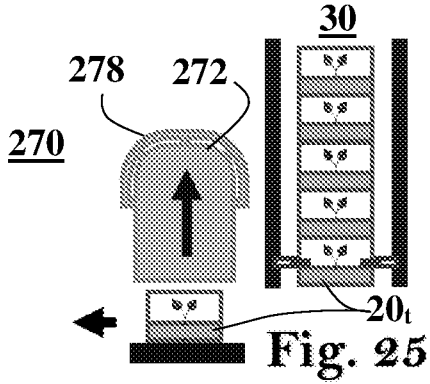

Fig. 25G

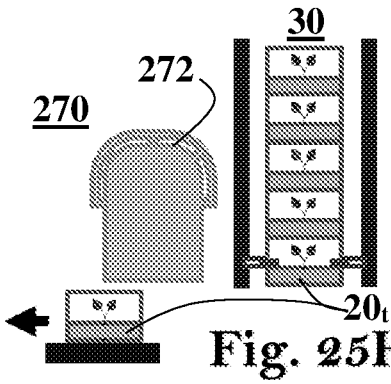

Fig. 25H

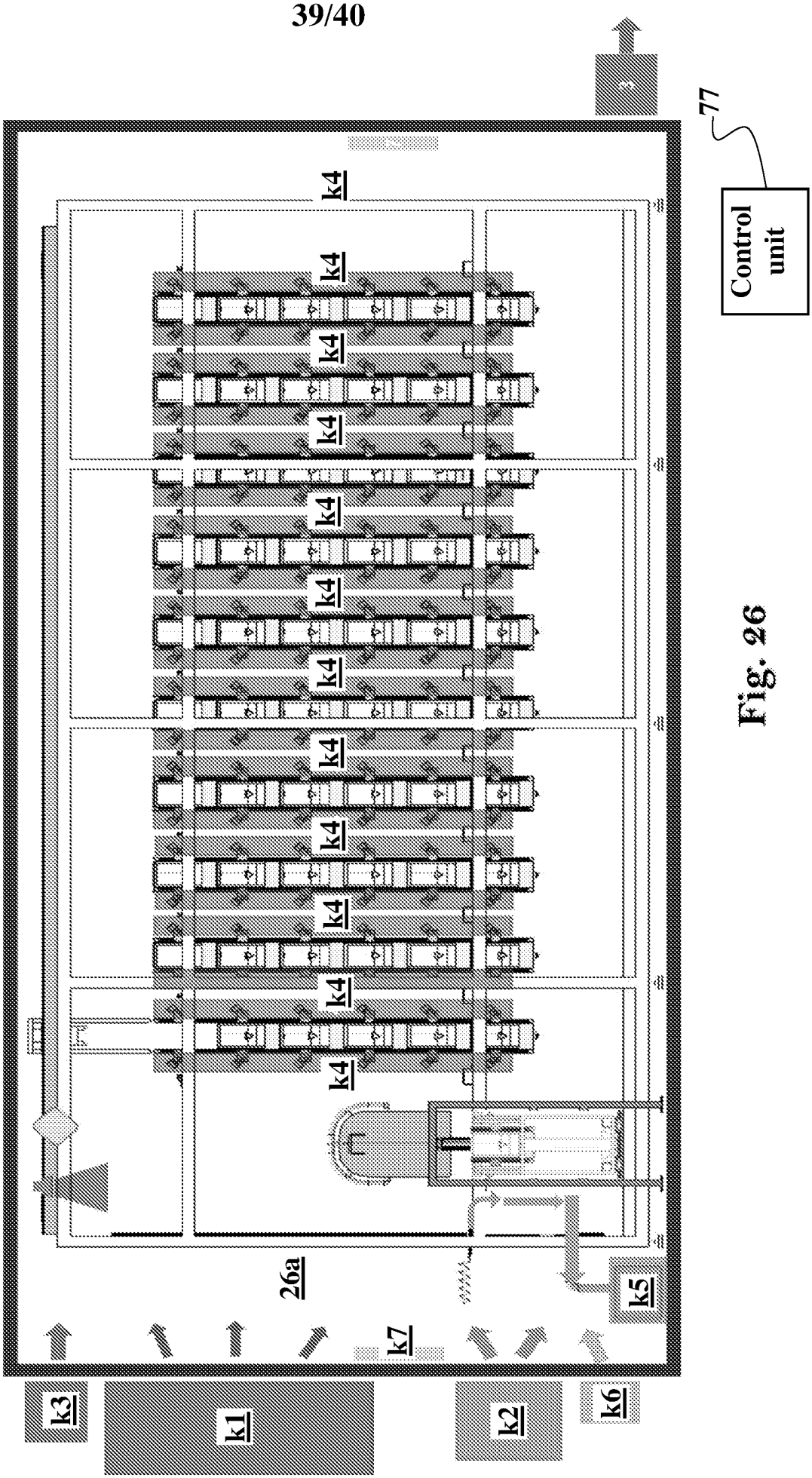
k4
k4
k4
k4
k4
k4
k4
k4
k4
k4
k4
k4
k4
26a
k5
k7
k3
k1
k2
k6
77
Control unit

Fig. 26

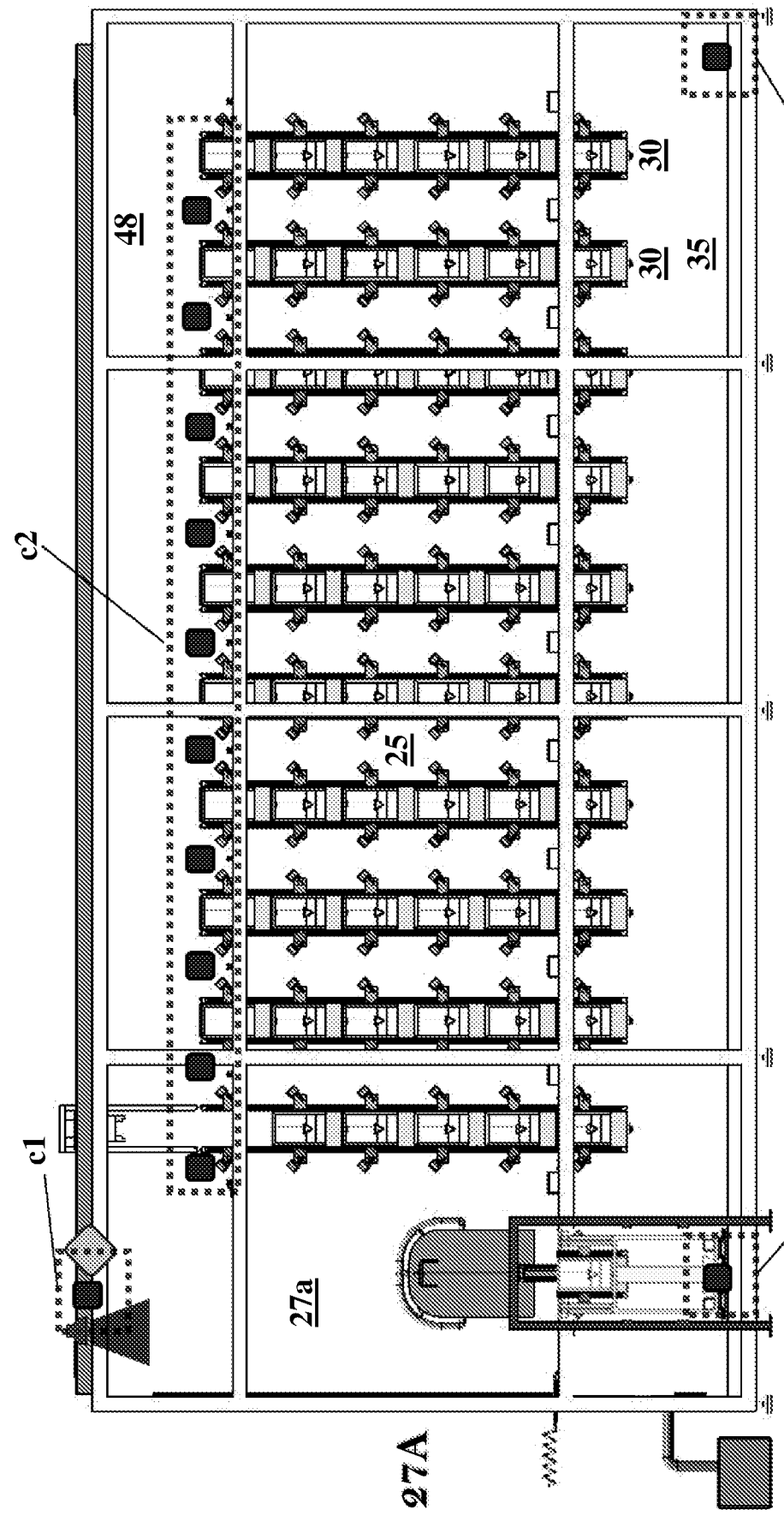

Fig. 27A

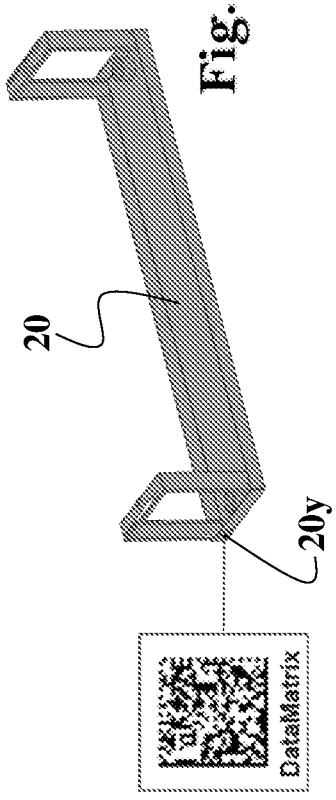

Fig. 27B