Dec. 29, 1931. G. FLEISCHEL 1,838,096

AUTOMATIC SPEED CHANGER

Filed March 29, 1930 7 Sheets-Sheet 1

Fig. 1

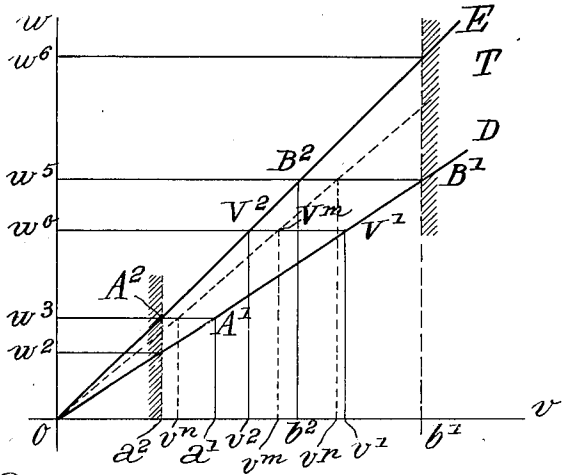

Fig. 2

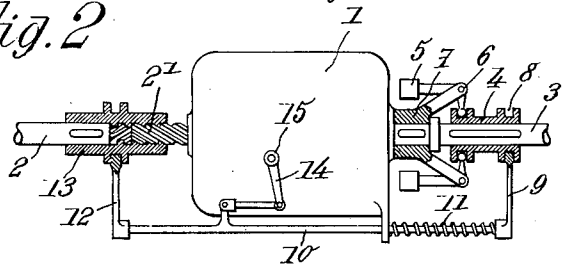

Fig. 3

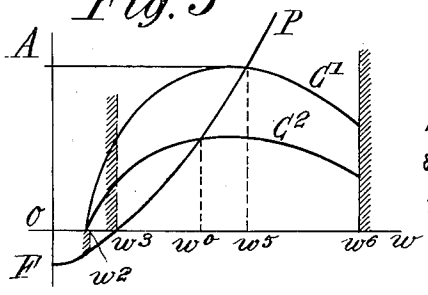

Fig. 4

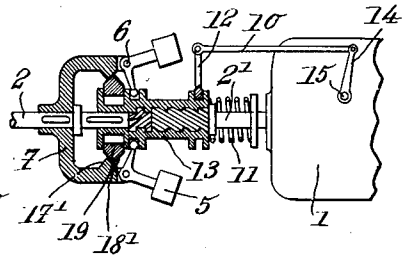

Fig. 5

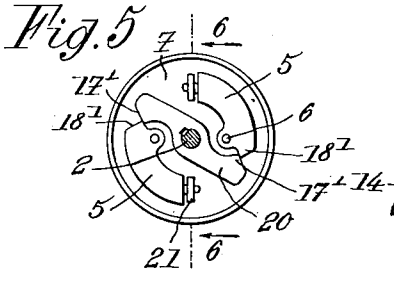

Fig. 6

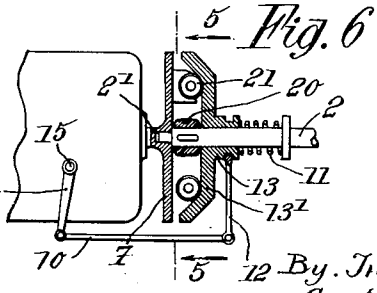

By. Inventor
G. Fleischel
Attorney
Barnett & Barnett
by A. Barnett

Dec. 29, 1931. G. FLEISCHEL 1,838,096

AUTOMATIC SPEED CHANGER

Filed March 29, 1930 7 Sheets-Sheet 2

Fig. 7

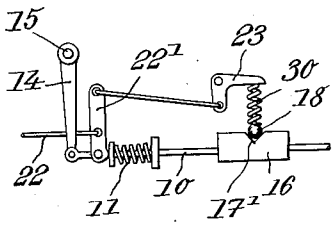

Fig. 8.

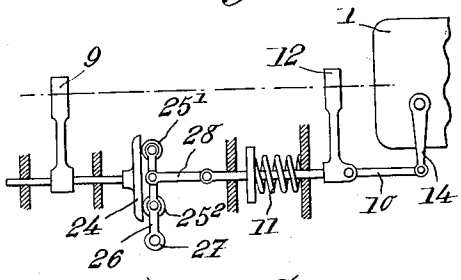

Fig. 8.a

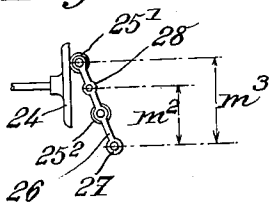

Fig. 8.b

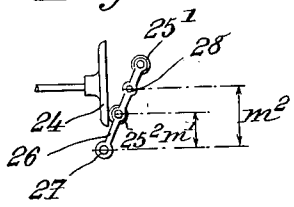

Fig. 9

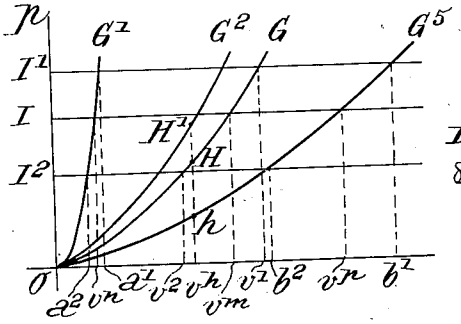

Fig. 10.

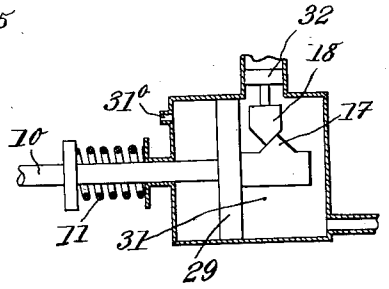

Fig. 11

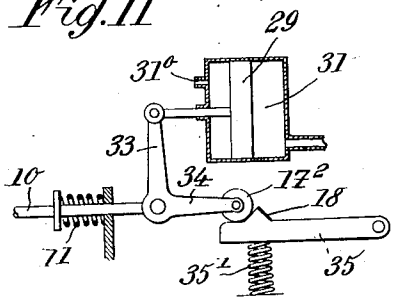

Fig. 12

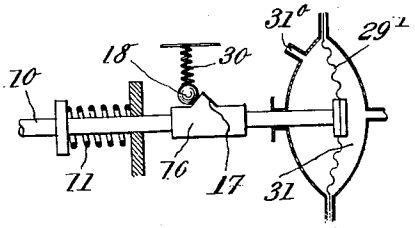

by: Inventor
G. Fleischel
Attorney
Barnett & Barnett
by A. Barnett

Dec. 29, 1931. G. FLEISCHEL 1,838,096

AUTOMATIC SPEED CHANGER

Filed March 29, 1930 7 Sheets-Sheet 3

Fig. 13.

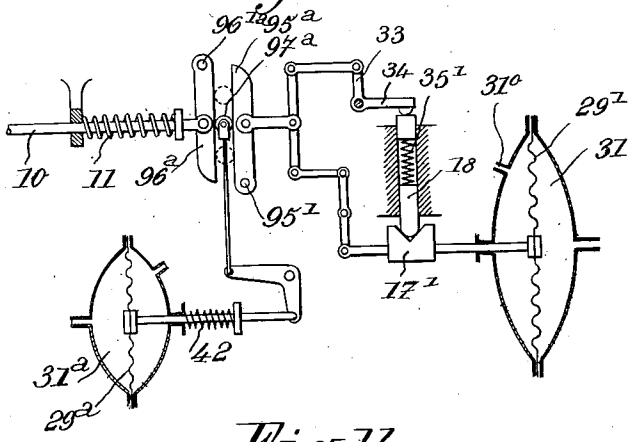

Fig. 14.

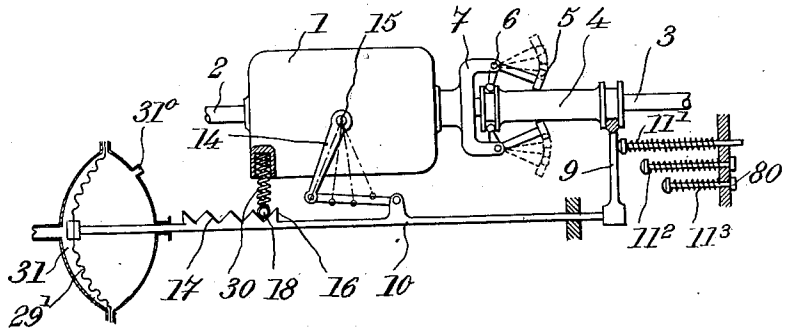

Fig. 15.

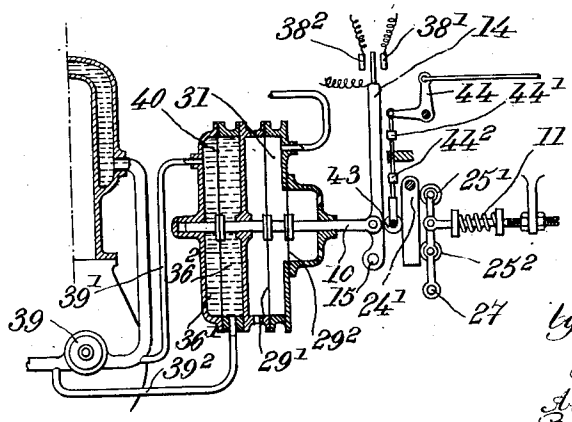

by Inventor
G. Fleischel
Attorney
Barnett & Barnett
by A. Barnett

Dec. 29, 1931. G. FLEISCHEL 1,838,096

AUTOMATIC SPEED CHANGER

Filed March 29, 1930 7 Sheets-Sheet 4

Fig. 16.

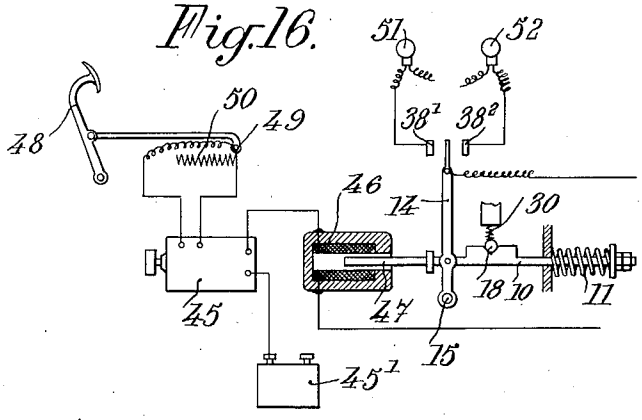

Fig. 17

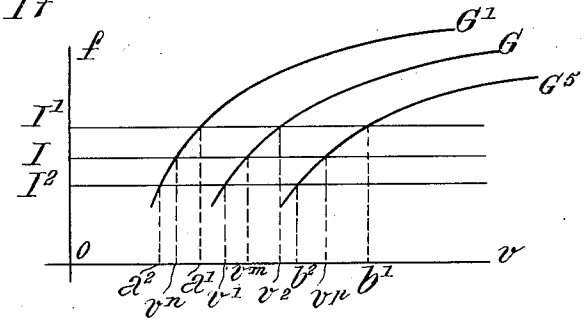

Fig. 18.

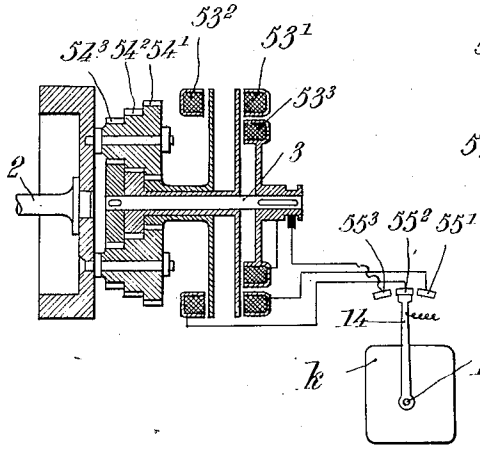

Fig. 19.

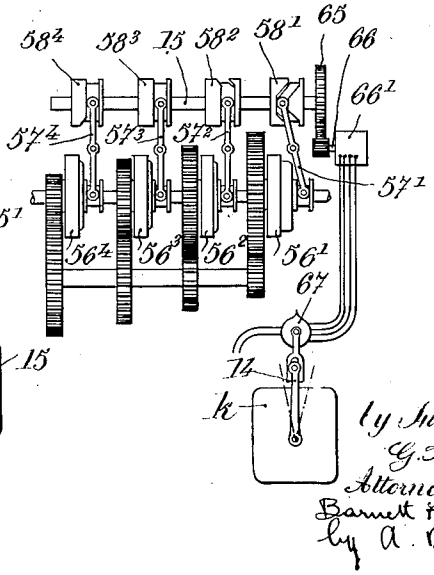

Inventor
G. Fleischel
Attorney
Barnett & Barnett
by A. Barnett

Dec. 29, 1931. G. FLEISCHEL 1,838,096

AUTOMATIC SPEED CHANGER

Filed March 29, 1930 7 Sheets-Sheet 5

Fig. 20.

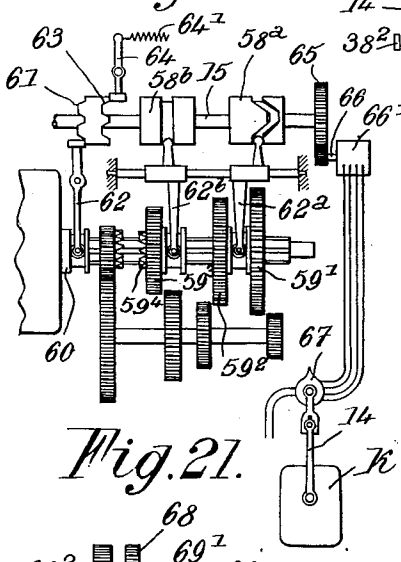

Fig. 21.

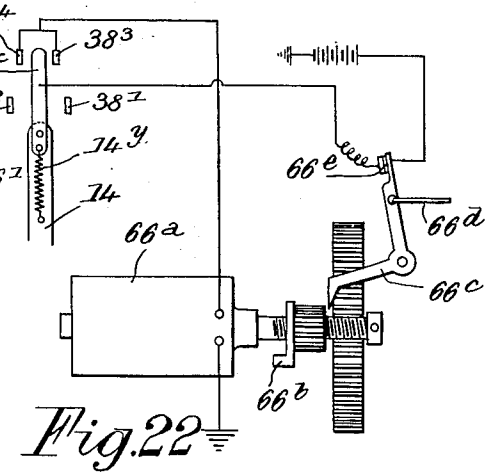

Fig. 22

Fig. 23.

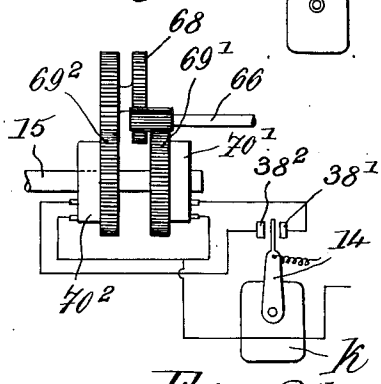

Fig. 24.

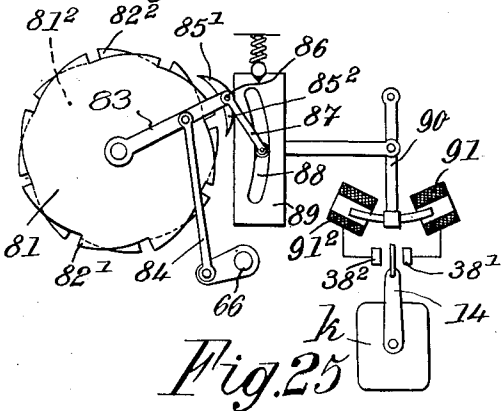

Fig. 25

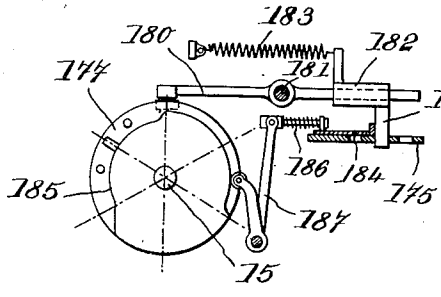

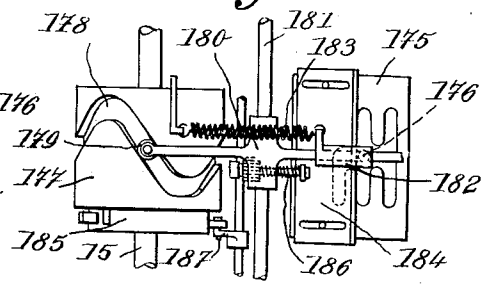

Inventor
G. Fleischel
Attorney
Barnett & Barnett
by A. Barnett

Dec. 29, 1931. G. FLEISCHEL 1,838,096

AUTOMATIC SPEED CHANGER

Filed March 29, 1930 7 Sheets-Sheet 6

Fig. 26

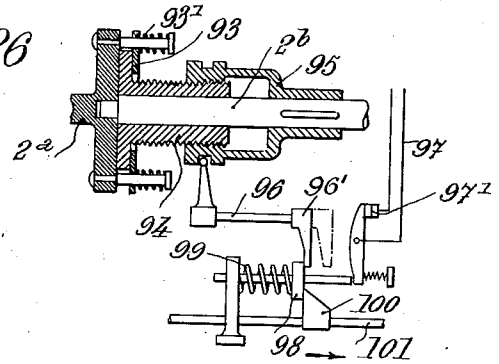

Fig. 27

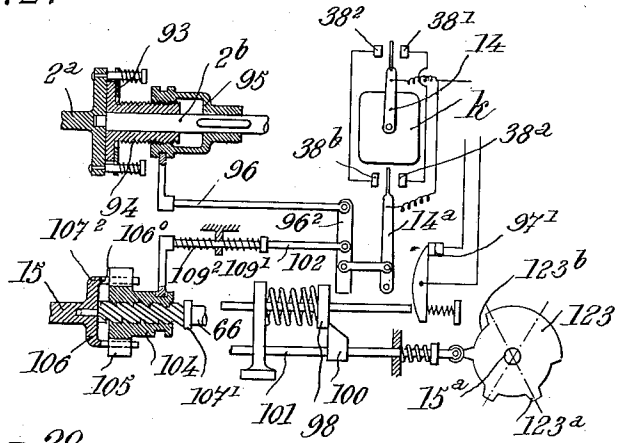

Fig. 28

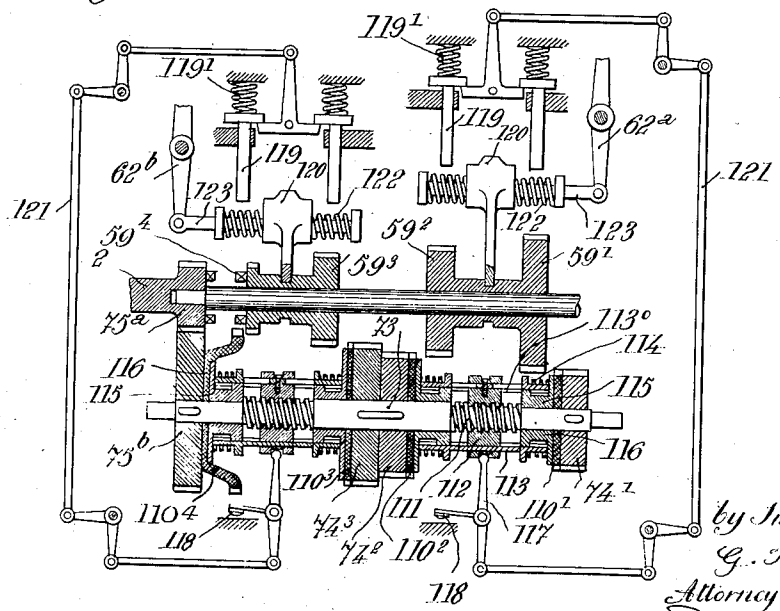

by Inventor
G. Fleischel
Attorney
Barnett & Barnett
by A. Barnett

Dec. 29, 1931. G. FLEISCHEL 1,838,096

AUTOMATIC SPEED CHANGER

Filed March 29, 1930 7 Sheets-Sheet 7

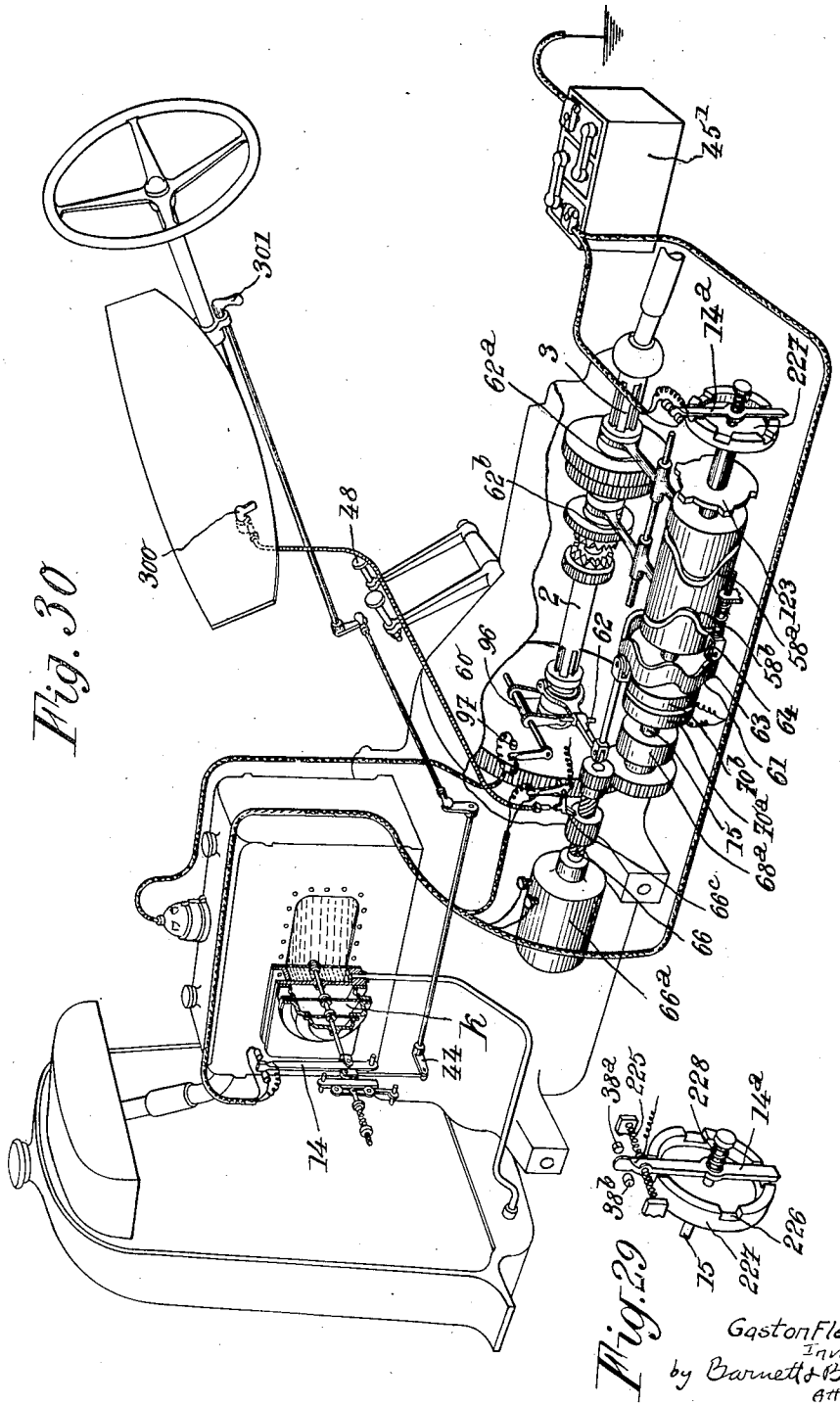

Patented Dec. 29, 1931 1,838,096

UNITED STATES PATENT OFFICE

GASTON FLEISCHEL, OF BLENEAU, FRANCE

AUTOMATIC SPEED CHANGER

Application filed March 29, 1930, Serial No. 440,020, and in Belgium March 28, 1929.

The present invention relates to automatic gear shifts for automobiles and the like.

One of the objects of the invention is to provide an automatic gear shift controlled simultaneously by variations in motor load and by the speed of the driving or driven shaft.

Another object is to provide means operative by variations of the suction exerted by the motor to control an automatic gear shift.

An additional object is to provide means operative by a dynamo to control an automatic gear shift.

A further object is to provide means for correcting "racing" of the motor shaft during an automatic shift of gears.

Still further objects will appear in the course of the detailed description now to be given with reference to the accompanying drawings in which:—

Fig. 1 is a diagram illustrating the conditions of motor operation;

Fig. 2 is an elevation, partially in section, of one constructive embodiment of the invention in which a dynamometric and centrifugal effect are utilized;

Fig. 3 is a diagram showing the operation of the gear shifting system;

Figs. 4 to 6 are two variants of the structure shown in Fig. 2;

Figs. 7, 8, 8^a, 8^b show two different realizations of the differential or off-set device;

Fig. 9 shows the operating diagram of the gear-shift-differential device;

Figs. 10, 11, 12, 13 show four gear-shift-differential devices referring to diagram Fig. 9;

Fig. 14 shows a gear-shift-differential device utilizing centrifugal force and suction;

Fig. 15 shows a gear-shift-differential device utilizing water pressure from the circulating system and suction;

Figs. 16 and 17 show a realization and the working diagram of a gear-shift-differential device utilizing the intensity of the current supplied by a dynamo;

Figs. 18 to 30 relate to the devices to be added to gear-shift-differential devices;

Figs. 18 to 25 show the methods of putting into action the decisions of the gear-shift-differential device;

Figs. 18, 19 and 20 show the adaptation of these methods to three gear-boxes of different systems;

Fig. 21 shows the means of utilizing for the control of these methods, the engine starter;

Figs. 22 and 23 show the means of combining the methods of execution and the power selected for this execution;

Figs. 24 and 25 show respectively in end elevation (with sections) and plan view of the means of control to be substituted for the present means of control which are not automatic;

Figs. 26, 27 and 28 relate to three different methods of realization of synchronizers, Fig. 29 being a variant of a detail of Fig. 27;

Fig. 30 shows, in perspective, an operative assembly including the specific devices represented in Figures 11, 15, and 20.

It is proposed in the first instance to study the case of gear-boxes with distinct combinations, or that of progressive gear-boxes in which one selects a certain number of ratios, as near to one another as may be wished, but which will be used to the exclusion of all others, such ratios being assumed as corresponding to the combinations of the first mentioned gear-boxes.

Fig. 1 shows the characteristic lines OD and OE, of two consecutive combinations which we will call respectively the "higher combination" and the "lower combination", in a gear-box containing an indeterminate number of combinations. The speeds "v" of the motor or driving shaft are shown in abscissa and the speeds w of the driven shaft as ordinates, the latter being proportionate to those of the vehicle. The minima and maxima speeds between which power can normally be utilized have been denominated a^2 and b^1 respectively.

It is desired, starting from the lower combination to change up to the higher combination at a vehicle speed corresponding to speed w^0 of the driven shaft—after which change the engine will be revolving at speed v^2 one sees that this change must only be made

when the engine is turning on the lower combination at a greater speed V^1 defined, as resulting from V^2, by the ratio of the two speeds considered which is represented on Fig. 1 by

$$R=\frac{v^2}{v^1}=\frac{B^1b^1}{Eb^1}.$$

The interval between these two driving speeds is hereinafter denominated the "differential resistance" and increases with w^0. The operation causes a drop in the driving speed from v^1 to v^2 (resulting differential resistance) whilst the speed of the driven shaft remains practically constant and equal to w^0 for if the operation has been properly effected the vehicle has maintained the same speed.

If at the same vehicle speed w^0 it is desired to change down to the lower combination, the higher must be dropped at engine speed v^2 and the latter shows a speed v^1 after the operation. Therefore, for a given vehicle speed w^0, whichever way the operation is performed the two driving speeds v^1 and v^2 will always correspond on the two consecutive combinations; they will hereinafter be denominated "corresponding change speeds". In Fig. 1 the operation is represented in both directions by a practically horizontal vector $v^1\ v^2$ whose ordinate corresponds to w^0 and the $v^1\ v^2$ direction of which defines the changes up and in the other direction of the changes down.

Therefore if one adopts as a basis the speed of the driven shaft or of the vehicle—which will hereinafter be coupled under the designation w—, one finds three zones in which the functioning differs totallly. In zone $w^2\ w^3$, whatever the external conditions may be, speed changes are impossible and the lower combination is compulsory since a change would bring the engine, in a higher combination, to a speed which it cannot attain. In zone $w^3\ w^5$, one can have a lower or higher combination, it is the zone of possible change. In zone $w^5\ w^6$ whatever the external conditions, speed changes will be impossible and one must necessarily be in the higher combination for the same reason that the speed of the engine is impossible with the lower combination.

In order to determine the speed at which one should make the change in the zone of possible change, one can adopt any rule laid down by practice for instance and as will be assumed henceforward, set up as a principle that the change should take place at a higher speed according as the load on the engine is greater; and whatever rule may be adopted, the driver may be allowed, if needs be, to use his own discretion in the intermediary zone and modify the said rule.

Starting from this principle when the torque demanded of the engine is small the speed change occurs along horizontal $A^1\ A^2$, determined by the lower limit a^2 which corresponds to speed w^3 of the vehicle. When the engine is called upon for its maximum torque, apart from the above mentioned latitude, the speed change should take place according to horizontal $B^1\ B^2$ determined by the upper limit b^1 corresponding to speed w^5 of the vehicle. And if in zone $w^3\ w^5$, the variations in the variations of the speed change w^0 were in strict proportion to those of the load, under half load of the engine for instance one would change half way between $w^3\ w^5$. Yet, if it is impossible to change speed below w^3 or above w^5, in normal practice on the open road, one may allow the driver to adapt the possible change zone to special incidental conditions such as going through a town or descending a hill, the engine then retarding the car which, in practice, is equivalent to displacing the zones.

The gear lever must there obey the three zone law completed by the principle mentioned above, if one bases on the speeds w of the driven shaft.

If one bases on the speeds v of the driving shaft one finds four zones which, by differential resistance, overlap partly. Following increasing speeds and starting from the lower combination one finds that zone $a^2\ a^1$ is the one where this combination is compulsory, $a^1\ b^1$ the zone where a change must be effected at a speed v which will be greater as the load is greater, and $b^2\ b^1$ the zone where the higher combination is obligatory, this last zone overlapping a portion of the former. Following decreasing speeds and starting from the higher combination we have first zone $b^1\ b^2$ where this combination remains compulsory, then the zone of possible changes $b^2\ a^2$ part of which overlaps zone $a^1\ a^2$ where the lower combination is compulsory.

By analogy with the driven shaft one can determine by calculation, taking into account the characteristics of the gear box and the conditions of its realization, an intermediary value v^m to define a speed change $v^1\ v^2$ or $v^2\ v^1$, providing that, starting from this speed v^m, one can always, by completing the gear lever by adding to it a device called differential described hereinafter, re-establish the true value of v^1 at which speed change must be effected in changes up and the true value v^2 for changes down. In this case fictitious speeds such as v^m designate three zones, as in the case of the driven shaft, zone $a^2\ v^n$ in which the lower combination is compulsory, zone $v^n\ v^p$ in which one must change over at a speed greater in proportion as the load is greater, and zone $v^p\ b^1$ for which the larger combination is compulsory. All such fictitious speeds, correspond to points such as v^m and are grouped on a straight line OT midway between OE and OD. The three zone law therefore applies also to fictitious speeds v^m taken on the driving shaft which makes it possible to utilize the same realizations as

in the cases of speed w, providing one has recourse to a differential which transforms these fictitious speeds into a real driving power such as v^1 in the case of changes down and v^2 in the cases of change up.

If the speed is taken on the driven shaft, passage between two consecutive combinations is defined by a single speed w^0 of that shaft whereas if the speed is taken on the driving shaft the same passage is defined by the two corresponding change speeds v^1 and v^2 or by the fictitious value v^m and in both cases the operation can be effected in either direction.

The three zone law can with advantage be made to control progressively variable gear boxes for the following reasons:

The maximum speed b^1 of the engine (Fig. 1) generally produces a torque smaller than the normal torque obtained say at speed b^2 corresponding to w^5 (C^1 Fig. 3). It is therefore logical not to change down before the engine has slowed up to speed b^2. This will be the zone of maximum favorable ratio and, by analogy with what precedes, is also denominated the zone of compulsory high combination. It is logical also not to increase the demand on the engine, through an increase in gearing, until a speed a^1 higher than speed a^2 which corresponds to the extreme idling of the engine. In such a case a^1 can be considered, in practice, as the equivalent to b^2. This is the minimum favorable gear ratio which, by analogy is denominated the compulsory low combination zone. Between these two zones one can adhere to the principle of increasing the gearing only at the speeds the greater in proportion to the importance of the load. Without constituting an absolute obligation the three zone law, for such gear boxes provides more favorable performance.

The above makes it easier to understand the functioning of the different mechanisms which will be dealt with hereinafter.

Reasoning from effect to cause it is obvious that it is the increase in speed (wherever it may be taken) which shows that the tractive force of the engine is greater than the resistance of the vehicle and so indicates that it is possible to change up to the higher combination, or increase the gearing, whereas when the load increases it causes one change down to the lower combination or reduce the gearing. These two expressions will be considered as synonymous hereinafter.

The gear shift is actuated by the effects of the determining causes—speed and load—completed in case of need by secondary effects. All these effects are produced by forces or actions created through any phenomenon or phenomena function of these determining or accessory causes. The gear shift acts on a tell-tale on which is concentrated the resultant of all the actions proportioned and directed in such a way as to observe the three zone law and under the impulse of this resultant the tell-tale can take up at least two characteristic positions, one in which it actuates a change to the lower combination, and the other to the higher combination.

Figs. 2 to 17 show different examples of gear shifts each one including differentials, except that shown in Fig. 2 of their working diagrams (Figs. 3, 9 and 17).

Figs. 2 to 6 show gear shifts in which the load action is recorded on a transmission dynamometer and the speed action is centrifugal force acting on two eccentric weights which are either (Fig. 2) placed on the driven shaft and do not in consequence require a differential gear or else (Figs. 4 to 6) fitted to the drive shaft which makes a differential necessary owing to the resulting differential effect affecting the driving speeds at the moment of changing.

On control 15, in a gear box 1, with say two combinations, a lever has been fitted and acts as a tell tale. It is actuated by the actions by means of rod 10 which is also fitted with an antagonistic spring 11 the use of which will become evident in the explanation of the diagram Fig. 3.

The actions selected have a tendency, one (speed) to increase the gearing, and the other (load) to reduce it, and act contrariwise on rod 10, the load of spring 11 adding itself to the load action.

In Fig. 2, the effect of the centrifugal force of weights 5, hinged at 6 on part 7, coupled on driven shaft 3, is collected by a sliding sleeve 4 and transmitted to rod 10 by fork 9 engaging slot 8 of the said sleeve.

The dynamometric effect is collected by fork 12 which is solid with rod 10 on sleeve 13 which can slide on a long key on drive shaft 2 and is machined in the form of a nut with a very large pitch to engage with a corresponding screw thread on drive shaft 2′. The driving torque, while it causes shaft 2^1 to revolve, also develops a longitudinal reaction in sleeve 13 which is constantly in proportion to the momentary value of the torque.

In Fig. 4, the two actions are taken from drive shaft 2 so that the two sleeves and their interconnection can be combined in one piece 13 and spring 11 fitted direct on shaft 2^1.

In Figs. 5 and 6 weights 5 are hinged at 6 to a disc 7, fitted on shaft 2^1, which is driven by means of part 20, fixed to drive shaft 2, and the contact of part 20 with the weights is disposed in such a way in regard to articulation 6 of the weights so that the transmission of the driving torque by these weights tends to close them and thus, without any other connection, acts in opposition to the speed action (centrifugal force). These weights are therefore directly subject to the

resultant of these two actions which they transmit, by means of rollers 2^1, to the suitably inclined ramps of part 13^1, which is coupled to sleeve 13 on which spring 11 acts and which is connected to control 15.

Setting aside the question of the point whence the speed is taken, the working of these various gear shifts is evidenced in diagram Fig. 3 on which speeds w, assumed as taken from driven shaft 3, are shown as abscissæ and the different positions of A as ordinates.

If the centrifugal force of the two masses 5 were considered separately it would be represented by a parabola, such that P, the summit of which would be at the origin O but as the check spring acts contrarily, with its force OF, to the action of speed its effect brings the summit of parabola P to point F below axis ow.

The load action proportionate to the driving torque of the engine—which varies according to the speed and the degree of throttle-opening given to the engine, for instance with the opening of the carburetor—is represented for a given admission, by a curve the ordinates of which are in proportion with those of the curve of the driving torque for the same admission.

Hence, at full throttle opening, the load action is represented by a curve such as C^1 and with partly open throttle by a curve such as C^2.

In order to observe the three zone law the forces are apportioned as follows. Check spring 11 has a value OF determined so that parabola P may intersect axis ow exactly at the speed w^3 below whch low speed is imperative.

The relation of the proportion of the load action of the driving torque is selected so that the charge action C^1, at full throttle, meets parabola P precisely at the speed w^5 above which the higher speed is imperative.

Below w^3 spring 11 still exerts an effort greater than the speed action, so that the resultant is in the direction of the action of spring 11 and that tell-tale lever 14 compels control 15 to take up the position of small combination above w^5 the ordinates of parabola P being always greater than those of curve C^1, the resultant is in the direction of the action of speed, even with maximum load action. Tell-tale lever 14 therefore compels control organ 15 to take up the larger combination position. And between w^3 and w^5 the resultant depends on the degree of admission given to the engine which determines curve C^2 correspondent with the momentary utilization. So long as the speed does not reach w^0 (junction of P and C^2) the speed action being lower than the load action, the resultant will be in the direction of the load and will place the control organ 15 in the small combination position. Below w^0 the speed action becoming greater than the load action the resultant will be in the direction of speed and will place the control organ in the large combination position. If there is a variation in speed it is at the moment when it attains value w^0 that the change of combination occurs.

The diagram shows that the more curve C^2 approaches maximum curve C^1, the more speed w^0 approaches w^5. On the contrary the more curve C^2 approaches Ow, the more speed w^0 approaches w^3. Therefore the speed w^0 at which the combination change occurs in zone $w^3\ w^5$, is higher as the torque supplied by the engine is greater. The three zone law and the complementary principle are therefore perfectly observed in all the mechanisms described.

The action of the speed lever may be based on phenomena other than centrifugal force for the speed or than dynamometric action for the load providing the phenomena utilized are perfectly defined in respect of speed and load. The phenomenon utilized may be a combination and itself influenced at the same time both by speed and load, such as the depression which exists in the inlet manifold of the internal combustion engine to which the mechanism is attached (Figs. 9 to 13).

On examining the phenomenon it proves to be determined by two variables, the speed v of the engine on the one hand and on the other hand the section of the carburetor gas inlet which is controlled by the throttle. If one records the diagram which represents the depression (Fig. 9) function of the engine speed with the throttle full open, one obtains a curve of parabolic nature G^5 in which the depression depends solely on the engine speed, for any lesser opening, considered separately, there will be enother similar curve, such as G, these curves being spread between G^5 and G^1 corresponding respectively to maximum and minimum opening. The greater or less throttle opening of the carburetor operated by the driver, in the same way as the regulating apparatus for any motor, determines the load of the engine so that, on an intermediary curve G, for any point of H at a speed v^h, one can separate the causes and submit that since depression $v^h\ h$ depends solely on the speed, its action may be materialized, and the supplementary depression h H which depends only on the load can act in the same way for the load.

It is to be noted however that this supplementary depression varies inversely to the load for, given a constant speed of the engine v^h, it increases as the carburetor is closed down that is to say when the load diminishes passing at H^2 on a higher curve G^2.

Hence a peculiar disposition of the diagram according to which the actions should aggregate.

In order to regulate the action of the antagonistic spring 11 one proceeds along the

lines already laid down. If the same notation as on Fig. 1 be adopted, v^p the fictitious speed of the engine which determines the highest possible passage b^1 b^2, the intersection of ordinate v^p with curve G^5 indicates the value OI which must be given to the antagonistic spring 11 which must check the action of depression. And on any intermediary curve G the change lever will cause the combination to change at a speed v^m which corresponds to the intersection of curve G compared with the horizontal (value of spring 11). In the same way v^n is the release speed with the smallest opening of the carburetor on curve G^1.

The three zone law is therefore observed in respect of the fictitious engine speeds, such as defined by line OT in Fig. 1. If one considers depression curve G^5, corresponding to the greatest gas admission, above fictitious speed v^p, at which this curve meets horizontal I, representing tension of spring 11, the depression overcomes the spring and the resultant in the direction of depression sets device 15 in the position corresponding to the high combination. Curve G^1 corresponding to the smallest admission meets horizontal I at a speed v^n below which spring 11 being stronger than depression, the resultant acts in the direction of the spring and the small combination becomes compulsory owing to the position taken up by control device 15.

For an intermediary opening, determining an intermediary curve G, the change of combination is effected at a speed v^m corresponding to the intersection of G with horizontal I.

The greater the throttle opening the nearer curve G approaches G^5 and the closer speed v^m becomes to v^p. In zone v^n v^p, which is that of the possible changes, the change of combination therefore ocurs at a speed v^m which increases as the load becomes greater.

Figs. 10 to 12 show various realizations utilizing depression without modification. The latter acts in a chamber 31 on a moving or pliable organ such as piston 29 or diaphragm 29^1 and the action is taken up by rod 10 on which antagonistic spring 11 acts, and which transmits the resultant to tell-tale lever 14 and to the control device 15.

Fig. 13, shows an arrangement whereby it is possible to produce, if so desired, a modification in the relative importance of the speed and depression load effects, thus permitting suitable apportioning. Depression acting on capacity 31, is transmitted, unmodified, to lever 95^a working on a fixed point 95^1. This lever transmits the depression action by a roller 97^a to another lever 96^a working about a fixed point 96^{1a} inversely to the former and this lever 96 is connected to rod 10, bearing spring 11 and acting on control device 15.

Roller 97^a does not modify the action of suction when it is in line with rod 10. When it moves away from articulation 95^1 of lever 95, it diminishes this action and inversely it increases it when it approaches the said articulation.

The movement of the roller is controlled by the resultant of another action of suction, acting in a capacity 31^a on a diaphragm 29^a, against a spring 42 in such a way that when suction overcomes spring 42 in this additional device, roller 97 moves so as to reduce the main action of suction or increase it by moving in the opposite direction.

It would be possible to suppress the extra capacity 31^a and to utilize a portion of the action of main capacity 31 by means of a lever on which spring 42 would act. The displacement of roller 97 could also be connected with that of the accelerator pedal.

This method makes it possible to apportion, in the complex phenomenon of suction the effects due to speed compared to those due to load for suction, for, used without modification it can, for certain engines, be far more sensitive to the variations in throttle opening than to speed variations which occasion an excessive value in the load action with regard to the speed action.

This makes it possible to utilize the suction as a load action in replacement of the dynamometer in Figs. 2 to 6 providing one takes into account the components of the speed action which it includes together with the principal speed action which would be utilized.

Fig. 14 shows a realization in which the principal speed action is obtained by centrifugal weights 5, fitted to driven shaft 3, and connected through rod 10 to tell-tale lever 14 and to the control device 15, and on the other hand to diaphragm 29^1 which is subject to the action of the suction in capacity 31. This suction supplies the full load action and part of the speed action which comes in addition to that of weights 5. The action remains the same as that of diaphragm Fig. 9, but curve G^5, which is still a parabola, is obtained by the addition of the ordinates of the two partial speed actions mentioned above. In this case it is possible to suitably apportion the total speed action with regard to the load action by determining in consequence the effect of weights 5.

For this example it has been assumed that box 1 includes a certain number of distinct combinations, say four, and that control device 15 can assume a characteristic position corresponding to the engagement of each of these combinations. In this case, the load of the antagonistic spring is suitably determined for each change and if it is noticed that for any one of these changes the speed of shaft 3, consequently the speed action of the weights, becomes greater as the changes are made on combinations of higher denomination it becomes necessary to have

an antagonistic spring of a certain value for the change from first to second combination, another giving a greater load for the change from second to third etc. This can conveniently be realized for instance by placing in opposition to fork 9, springs 11^1 11^2 11^3 positioned in echelon by checks 80 so that in the positions which the fork occupies during a change from first to second combination it can only be solicited by spring 11^1 and touch spring 11^2 only when engagement with the second combination has been completed.

In this way a change from second to third combination is effected against the combined load of two springs 11^1 and 11^2, load of spring 11^2 being determined by the increase in speed action due to the increase in speed of shaft 3 caused by the change of combination. The action of spring 11^3 is determined in the same way and so on.

Fig. 15 shows a device in which the main speed action is produced by the pressure in the cooling jacket of a cylinder fitted with water circulating pump 39.

The load action with a secondary speed action is produced in a capacity 31 on which the carburetor depression acts.

If the main speed action due to water pressure is received by a diaphragm 40 in the same direction due to the complex action of depression acting on two diaphragms 29^1 29^2 of unequal surface one obtains the same functioning as that described in connection with the diaphragm of Fig. 9 in which the parabola G^5 would be obtained by the concurrence of the ordinates of the parabola corresponding to the secondary speed action of depression and of the parabola representing the water pressure variation resulting from engine speed and consequently that of circulating pump 39.

The apportioning is effected in this case by determining the suitable dimensions of the various diaphragms 29^1 29^2 and 40. It is preferable that diaphragm 40 should be subject only to the dynamic pressure due to speed and that static pressure which may occur for instance owing to the difference in level which may exist between the radiator and diaphragm 40 should be counterbalanced. One establishes diaphragm 40 between two capacities 36^1 and 36^2. Capacity 36^2 is connected by a duct 39^2 for instance to the intake of the pipe where there is only static pressure while capacity 36^1 is connected by duct 39^1 to the output of the pump which is under total pressure, both static and dynamic. One surface of the diaphragm therefore receives total pressure and the other static pressure so that the diaphragm is solicited only by the difference of these pressures, that is to say to dynamic pressure. In many cases the effect of static pressure in capacity 36^1 might be replaced by a spring of equivalent load.

One might also, Figs. 15 and 16, establish a change speed for two or for a greater number of combinations by having recourse to the electric current supplied by a generator for speed action and for load action, the variation in this current resulting from the effect of a resistance in the circuit the value of which would be controlled by the movement of the accelerator pedal either direct as shown or through depression, by having recourse for example to the auxiliary device which causes the displacement of roller 97 on Fig. 13.

It has been assumed, in example Fig. 16, that one utilized dynamo 45 of an engine, feeding a circuit comprising a battery of accumulators 45^1.

An electric coil 46 is mounted in series in the electric lighting installation (which is not shown) and received current supplied by dynamo 45. This supply is a function of the speed at which the dynamo turns, assuming that the terminal tension of the battery remains constant. This coil 46 surrounds a soft iron core 47, fixed on rod 10 which bears antagonistic spring 11 and which is connected to tell-tale lever 14 and control device 15. Spring 11 tends to withdraw core 47 from coil 46 with the intensity of the current it receives. Accelerator pedal 48 is connected with sector 49 by a resistance 50 inserted in the energizing circuit of dynamo 45 which produces the load action.

Diagram Fig. 17 shows the working of this arrangement; engine speed v of the engine is shown is abscissæ and attractive force f of coil 46, proportionate to the current produced, as ordinate. If one ceases to act on pedal 48, i. e. if one throttles down to a minimum, resistance 50 does not enter into play.

The intensity of the current is not reduced and causes an attractive force in coil 46 corresponding with curve G^1.

If the throttle is wide open resistance 50 enters into play in full and the current circulating in the circuit is reduced and in consequence the attracting force of coil 46 this force corresponding to G^5. For an intermediary position of the sector the representative curve of the attraction force of the coil corresponds with G.

The proportioning of the actions is effected as follows: Curve G^1 which corresponds to the utilization of dynamo 45 without resistance, determines, by its intersection with the ordinate of speed v^n, above which the small combination is compulsory, the value OI of antagonistic spring 11. Value of resistance 50 is determined so that curve G^5 which represents the working of the dynamo under full resistance, passes through the meeting point of the ordinate of speed v^p (above which the higher combination is compulsory), with horizontal I. For an intermediary resistance, i. e. for an

intermediary position of the accelerator and consequently an intermediary load of the engine, the functioning of the dynamo, will correspond to an intermediary curve G the intersection of which with the horizontal will determine speed v^m at which the change of combination occurs. The nearer curve G approaches G^5 which is full engine load, the nearer speed v^m gets to v^p. The change therefore occurs at a speed which is higher as the load becomes higher. This is in accordance with the three zone law and with its complementary principle.

In the foregoing, the place where speed was taken has not been taken into consideration.

If the speed is taken on driven shaft 3, between gear-box 1 and the road wheels, the change will be effected without any modification at an indefinite speed w^0 the momentary speed of the shaft as set forth in connection with Fig. 1. The gear-shift devices described can therefore be applied without any other addition. If the speed is taken on shaft 2 of the engine or any other shaft connected with it, the change up after which it is desired to obtain speed v^2 should not be effected as explained in connection with Fig. 1, at a speed v^m for which the gear shift has been set. It is necessary to accelerate the engine previously up to a greater speed v^1 (safety differential effect) and the operation of changing, commenced at v^1 brings the speed of the engine to v^2 (resultant differential action).

The differential mechanism working in connection with the gear shift which left to itself would effect the change at the intermediary speed v^m fills a double function: 1° to cause the change to occur at speed v^1 if the change is upward and v^2 if it is downward for, once the operation has been effected one finds the desired speed v^2 or v^1; 2° to suppress the disturbances which sometimes in the case of the speed action, sometimes of the load action, result from this displacement from v^m to v^1 or v^2 (safety differential effect) then of v^1 to v^2 or from v^2 to v^1, (differential effect due to the change).

The double action of the differential device may be obtained by placing on tell-tale lever 14 or on one of the parts connected with it a resistance which will oppose its movement in any direction, up to a suitably determined value of the actions.

This resistance necessitates supplementary effort on the part of the resultant acting on the tell-tale lever before it can cause it to move, and according to the direction of this resultant the real speeds of change over are off set on either one or the other side of fictitious speed v^m at which the change in position of tell-tale lever would have occurred had the differential device not intervened; and the action of the differential device can be calculated so that these off-set speeds may reach or exceed v^1 and v^2.

This can be effected either by utilizing an auxiliary power which may be distinct from the actions, or it may be drawn from those actions and acting on a sort of bolting device or brake of which this force limits the effect or else by causing the perturbed action or actions to act on the rest of the mechanism through a connection in which, by a variation in the length of the leverage the undisturbed actions are amplified or reduced in the same proportion as the disturbed actions so that their relative value may become what it was before the disturbance.

Fig. 12 shows a realization of this sort in which the bolting is obtained by a projection 17 with two opposed ramps borne by a part 16 solid with rod 10 on which the actions work. A ball 18, loaded by spring 30 which has a constant but adjustable tension, resists the displacement of rod 10 to an extent which depends on the tension of the spring and the slope of the ramps. This resistance can therefore be set to correspond to the greatest disturbances the differential effect causes to the actions. As this ball is only in a stable position at the foot of either of the ramps, this off-set device only permits two characteristic positions of the tell-tale lever and is therefore suitable for a two speed gear-box, the engagement of each of the combinations being obtained when tell tale lever 14 occupies the corresponding characteristic position.

Fig. 14 shows a similar arrangement fitted to a four speed gear box. It is sufficient to provide three cams 17 on part 16 arranged so that the ball drops in the hollow between two cams.

The actual off-set thus obtained is only equal to the theoretical off-set at its highest value. In other circumstances it exceeds it.

If it were desired to realize off-sets exactly equal to the theoretical at all speeds one studies more especially the corresponding solution. If one desires for instance an off-setting device for the speed effect taken off the engine, calculation shows that the auxiliary power exerted on the bolting device must be produced by the same influences as the speed action and remain in a suitably calculated proportion to it when variations occur in this influence. A theoretical bolting device of this sort can be obtained for instance by the means shown on Figs. 4 to 7.

On Fig. 4 the off-setting device is constituted by cams 17, turning with the weights and auxiliary weights 18 sliding freely in recesses provided in sleeve 13, so as to turn with it at the same speed as weights 5. These auxiliary weights 18 fulfil the object of ball 18 in Fig. 12.

The centrifugal force which acts on weights 18 replaces spring 30. In this man-

ner, instead of the bolting effect being constant it will always be in proportion with the centrifugal force which constitutes the speed action, and calculation shows that in these conditions the off-set obtained is always equivalent to the theoretical off-set desired. If for safety one wished to obtain an off-set in proportion to the theoretical off-set but slightly higher it would be sufficient to increase weights 5 in consequence.

In this solution the bolting effect is controlled by an auxiliary force which is always in exact proportion to the speed action.

On Figs. 5 and 6 bolting is also ensured by an auxiliary force in proportion with the speed action but it is obtained from the weights themselves which supply the speed action and the mass of which has been determined to assume this double rôle. Ramps 17′ and 18′ the object of which was explained in Fig. 4 are placed at the point of contact of driving arm 20 and weights 5.

When weights 5 move towards, or away from, the center of the rotating whole, cams 18 must respectively clear corresponding cams 17′ of arm 20. Fig. 5 shows cams 18′ at the moment of clearing. If the effort demanded by this operation is properly calculated everything happens as correctly as in the example shown on Fig. 4 part of weights 5 suitably determined acting as auxiliary weights 16.

Irrespective of the speed action utilized one could realize bolting proportionate to this action and produced by it. Fig. 7 shows a disposition of this sort. One uses the action of speed amplified so as to be able to also supply the auxiliary force of the differential device on rod 22 which distributes it through rocking lever 22^1 in the suitable proportion determined by the leverage of the said rocking lever, on the one hand to rod 10 on which other actions act (load and antagonistic spring 11) and on the other through a bell-crank 23 on ball 18. A spring 30 can be inserted between the bell-crank 29 and ball 18.

Up to the present we have seen gear-shift differential devices which cause the tell-tale lever to assume as many characteristic positions as there are combinations in box 1.

It may be advantageous to reduce to a minimum the characteristic positions which the tell-tale lever can occupy to control the different combinations whatever their number.

Thus for gear boxes including more than two combinations and in which the control device can occupy more than two useful positions one can within the limits of invention have recourse to a lever which, in an active position, causes the changes up in combinations, or the changing of the higher combination to another active position the drop in combinations and, in a neutral position determines the utilization of the combination already engaged. The method of attaining this result will be hereinafter described. If this disposition is alluded to here, it is solely because of the simplification it permits in the design of the differential device by suppressing a number, which may be large, of the characteristic positions of the differential device and thanks to this arrangement a differential device designed to control a two combination gear box is suitable for a gear box containing any number of combinations.

Fig. 7 shows a realization of this disposition where the bolting ramps are recesses 17^1 instead of projections co-operating with ball 18. Assuming the engine to be revolving at fictitious speed v^m, the resultant of the actions is null and ball 18 is at the bottom of the recess. If the engine speeds up to v^1 or slows down to v^2 the bolting effect is such that it is higher than the resultant which occurs in either direction and it is only when engine speed has got some way beyond v^1 if accelerating and v^2 if decelerating that the resultant will be able to overcome the bolting resistance placing tell-tale lever either in the up or the down change position.

The change of combination then occurs in the suitable direction but the resultant differential effect causes the engine speed to pass from v^1 to v^2 or from v^2 to v^1. The resultant is reduced to a value less than that of the bolt and the latter brings the lever back to its neutral position which permits the utilization of the combination then engaged until further variations in the pace of the engine call for another change.

The gear-shifts first mentioned are hereinafter denominated "multiple-position-gear-shifts" and those mentioned last "neutral-position-gear-shifts" and any gear shift of the former type can be converted into one of the latter type by modifying its bolting ramps.

Fig. 8, 8^a and 8^b show another realization of the differential device where, instead of introducing an auxiliary bolting force, one conciliates the correct functioning of the actions with the differential effects by varying the leverages.

The principle consists in transmitting the action, distributed by a speed change, by means of a lever such that at the moment of the change the leverage varies making the new values of the actions on the new fulcrum, equal to the previous values measured on the primitive fulcrum.

Referring to the disposition in Fig. 2, but supposing the actions to be taken in front of the gear box as in Fig. 4, the differential device will be realized by interposing between the speed action which has been disturbed (acting on fork 9) and rod 10 which connects it to the undisturbed actions (load and antagonistic spring) and to tell-tale lever 14, a flat tappet 24 which in medium position of fork 9, makes contact with two rollers 25^1 and

25^2 borne by lever 26 hinged at fixed point 27 and connected by rods 28 to rod 10.

Assuming lever 14 has a tendency to take up the position of a higher combination, this movement causes an angular displacement of lever 26, roller 25^1 ceases to be in contact with tappet 24 (Fig. 8^b) and the speed action can only act through the short lever arm m^1 whilst the other actions retain their lever arm m^2.

The speed action must therefore become sufficient to compensate these conditions and the speed must therefore increase further above v^m which would have been the change speed if the lever arms had been equal so that lever 14 might actually occupy its operative change up position. One can select the lever arms m^1 and m^2 so that the new speed necessary may be equal to v^1.

Supposing now that lever 14 tends to occupy position operative for a drop in combination. It will tend to bring rod 10 towards the left of Fig. 8, until roller 25^1 makes contact with tappet 24. Up till that moment the load action and antagonistic spring 11 acted on lever m^2 to overcome a speed which had only lever arm m^1 (Fig. 8^a). But at this moment the speed action on lever arm m^3 is greater than m^2 (Fig. 8^a) and for the movement to continue, to reach the active position of changing down, the speed must diminish further. One can set m^2 and m^3 so that the new speed at which the lower combination will be engaged will, at most, be equal to v^2.

Fig. 10 shows how, in the case of suction, one can realize a bolting device the effect of which will always be in proportion to this suction. For this purpose an auxiliary moving organ 32 is submitted to this suction and presents an action determined by the importance the bolting effort must assume in relation to the principal action of suction. This organ 32 acts on suitable bolting ramps 17 and 18.

Fig. 11 shows how one can draw a bolting effect in proportion with the principal suction action on organ 29 which receives the suction action by means of bell-crank lever arms 33 and 34 which are determined according to the bolting effect desired. The ramps on one of the two bolting pieces can be replaced by roller 17^2. If it is desired that the proportionate bolting effect should be limited to a certain value one can make the ramps 18 on a part 35 hinged to a fixed point and pressed against roller 17^2 by a spring 35^1 of suitable tension. Immediately the bolting effort exceeds the limit set determined by the tension of spring 35^1 the latter is compressed and limits the bolting effect.

Fig. 13 shows a bolting device proportionate to the suction and drawn direct from the suction itself by a rocking lever—distributing the principal suction action on the other components of the gear-shift on the one hand and on the other the bell-crank 33—34 which acts on bolting device 17^1—18 through distance spring 35^1.

Fig. 15 shows a differential device similar to that on Figs. 8, 8^a and 8^b, arranged in such a way that the driver may adapt the change zones to special conditions such as the passing of a cross-road or the descent of an incline, the engine retarding the vehicle by displacing the change speeds zones. He can effect this by control lever 44 which displaces a roller 43 between the planes provided respectively on tell-tale lever 14 and on lever 24^1 as has already been explained with a view to another object in connection with Fig. 13. The displacement of this roller temporarily modifies the value of antagonistic spring 11 in the desired direction which results in modifying the change zones and in order that this effect may not become excessive checks 44^1 and 44^2 act as limits to the intervention of the driver.

On Figs. 15 and 16 it has been assumed that the tell-tale lever may give an indication to the driver of its active positions by actuating, by means of a contact, a signal such as lamp 51 when in the position of an upward change and by contact 38^2, a signal 52 when it is in position for a downward change. In the neutral position there is no signal.

The arrangements described above, as examples, are some of the means suitable for executing the decisions of the gear shift in gear boxes of various systems. The gear-boxes most adopted can be placed in two classes: 1, systems in which the engagement of each combination is effected by a resilient coupling, clutch or brake; they are, for instance planetary gear boxes in which each speed combination incorporates a clutch or a progressive brake; 2, those in which the engagement is by sliding pinions or dogs usually completed by an external progressive clutch.

In all cases one has recourse for the operations necessary to carry out the execution of the decisions of gear shift k—which replace all the operations a driver would effect—to energy which may be quite distinct from that applied to the gear shift and which will hereinafter be known as "outside energy". The power can, for instance, be supplied by the engine, the electric generator, a reserve of air compressed by the motor, etc. This energy acts, when necessary and in the proper direction on control organ 15, controlled by the gear shift.

In case of need this control organ can be arranged so as to ensure the execution, in their proper order, of the secondary manœuvres (other than those which up to the present were effected by the driver through the gear lever to change gears or start the vehicle).

The whole can well be completed by safety devices on the one hand (synchronizer, automatic clutch for starting) and on the other hand by organs of convenience, reducing the driver's intervention to a minimum for such manœuvres as must be left to his discretion such as forward speed, stopping and reversing.

Figs. 18 to 25 and part of Fig. 30 show different dispositions of organ 15 of gear-boxes based on different principles, Figs. 18 and 19 refer more particularly to boxes fitted with progressive engagement for each of their combinations and Figs. 20 to 25 to snatch boxes such as those employing gear wheels or dogs.

Fig. 18 shows the control of a three speed gear box arranged to function under the direct influence of an outside agency. This may be supplied by any outside source of electricity controlled by the positions of lever 14 which can take up a number of positions (Fig. 14) bringing into action, in the case under consideration one or other of three electro-magnets 53^1, 53^2, 53^3, which act respectively on the three combinations 54^1, 54^2 and 54^3 of an ordinary planetary gear type. Lever 14 connected to the current can contact with either of three contacts 55^1, 55^2 and 55^3 corresponding respectively to the positions of lever 14 which engage first, second and third speeds. It is obvious that the same arrangement could be used with a lever 14 having a "neutral position" (Figs. 7, 8, 13, 15 and 16) by introducing between the said lever and the organ cooperating with contacts 55^1 etc., a suitable movement transformer ensuring the distribution of current to the contacts.

Fig. 19 shows the control of a four combination gear-box each of which is actuated by a progressive clutch 56^1, 56^2, 56^3, 56^4, acting by friction for instance and on which outside energy cannot act direct. One controls the different clutches respectively by levers 57^1, 57^2, 57^3 and 57^4 controlled respectively by cams 58^1, 58^2, 58^3 and 58^4 fixed to a shaft which acts in the same way as control device 15, in such positions that owing to their shape there can only be one clutch tightened at a time and that the clutches tighten progressively in the numerical order of the combinations. Rotation of shaft 15 in one direction corresponds with upward combinations in numerical order and in the other direction to downward combinations. In the case of four combinations one arranges that the engagement of one combination in regard to the next shall take place when shaft 15 has made one quarter turn. The mechanisms ensuring the rotation of shaft 15 in the desired direction and to the correct angle will be described below.

The disposition (Fig. 19) might be adapted for the control of a gear-box such as shown in Fig. 18. It would be sufficient to place on shaft 15 a distributor contact placing itself successively opposite contacts such as 55^1, 55^2 and 55^3 (Fig. 18) through the rotation of shaft 15. There are planetary boxes of the kind shown in Fig. 18 in which the brakes instead of being electro-magnetic are friction operated. The control of such brakes could be effected in precisely the same manner as that shown on Fig. 19 for clutches such as 56^1.

Fig. 20 refers to the case of snatch gear boxes and shows a four combination gear-box actuated respectively by sliding gears 59^1, 59^2 and 59^3 for first second and third speed respectively and by a dog clutch for the fourth speed.

The sliding gears and dog clutch are controlled by cams 58^a and 58^b fixed to shaft 15, the operation of the said cams and shaft being similar to those of the example set forth in Fig. 19.

In snatch gear-boxes one must interpose the general clutch 60 of the vehicle to enable the displacement of the sliding gears. This result is obtained automatically through the intermediary of cam 61 fixed to shaft 15 and such that at the latching positions of shaft 15 corresponding with the operation of any one of the combinations, clutch 60 is tight and on the contrary released through the control of lever 62 during the rotation of the shaft when it passes to the next upward or downward combination. A quarter rotation of shaft 15 therefore ensures the operations a driver would effect.

Shaft 15, in the operations it controls through the cam, is subject to highly varying resistances during its travel; it has to produce an important effort in particular when it causes the declutching of the main clutch whilst the clutching action tends to propel it in the direction in which it is travelling. In order to reduce or indeed to suppress these inequalities in effort one can arrange, either on cam 61 itself as shown on Fig. 20, or on a distinct cam fixed to shaft 15 ramps 63 on which lever 64 acts. This lever is solicited by a balance spring 64^1 the action of which on ramps 63 is always equal and opposite to that of clutch spring 60. The effort necessary to rotate the shaft is thus balanced and can be made constant.

By giving cam 63 a suitably selected shape one can obtain any other result that might appear interesting; for instance one might make shaft 15 cock spring 64^1 at the beginning of the rotation necessary for a change of speed, the release of the spring causing shaft 15 to complete its rotation.

In addition to balancing shaft 15 ramps 63 of cam 61 and spring 64^1 propel it.

It is to be noted that in propelling shaft 15 the propelling mechanism stops shaft 15

exactly at each position corresponding to the utilization of the combinations.

Suitable mechanism for rotating shaft 15 in the direction and over the angle required can be most varied and Fig. 19 shows only a few characteristic examples.

On Figs. 19 and 20 shaft 15 is driven through transmission 65 by shaft 66 of an auxiliary electric motor 66^1 an electric switch 67 controlling rotation in either direction or stoppage.

The extreme positions of this switch are determined by those of lever 14 controlled by a neutral gear-shift-differential device K, of any type and positions corresponding respectively to upward or downward combination changes. The neutral position of switch 67 corresponds to the stoppage of motor 66^1.

On Fig. 21 shaft 66 is always driven in the same direction by an outside electric source, for instance a rotating shaft in the box, an auxiliary electric motor, etc. This shaft 66 through any mechanical reverse system 68, drives in an opposite direction two wheels 69^1 and 69^2 fitted loose on shaft 15 but which can be made solid with it by means of clutches 70^1 and 70^2 of any type, for instance electro-magnetic, which are thrown in or out of action by lever 14 of gear-shift K which in the case considered, is connected to the electric source and through contacts 38^1 and 38^2, can send current into the desired clutch.

In the case where shaft 66 is driven by an auxiliary electric motor which may be, as shown in Fig. 22, 66^a which starts the engine of the vehicle it is sufficient to cause this motor 66^a to be put in or out of action, under the control of the gear shift, at the moment when a change is to be effected.

Confusion between the two offices fulfilled by the said motor 66^a, must be avoided and for this purpose one acts on moving organ 66^b which ensures temporary engagement with the engine when starting, a bolt 66^c, which prevents engagement so long as the driver has not removed it by control 66^d which he operates when starting. At this moment a contact 66^e on the said bolt, cuts off the current which feeds the shift so that since the coils of clutches 70^1 and 70^2 cannot be excited, the rotation of motor 66^a does not drive shaft 15 which controls the changes. On the contrary, when the bolt has returned to its place, the moving organ cannot establish connection with the engine of the vehicle when rotation is caused with a view to rotating shaft 15 and, at this moment the gear-shift is normally fed with current. It may be advantageous to cause the starting of motor 66^a a little before sending current to coils 70^1 and 70^2.

For this purpose, on the free end of lever 14 one hinges a small lever 14^x normally held in line with the former by spring 14^y, this lever 14^x, when lever 14 is inclined one way or the other, comes into contact first with a contact 38^3 or 38^4 to start motor 66^a, next with contact 38^1 or 38^2 which feeds the corresponding clutch coil 70^1 or 70^2.

On the right side of Fig. 30 the mechanical reverse gear 68 and the two clutches 70^1 and 70^2 are replaced by a planetary system 68^1 and two brakes 70^a and 70^b, electro-magnetic for instance; one of these 70^a being excited through the control of lever 14 of shift-gear K, causes shaft 15 to be driven by shaft 66 in one direction (upward speeds) and the other 70^b in a reverse direction (downward speeds).

Fig. 23, shows another arrangement of control of shaft 15 which transforms the rotation in one direction of shaft 66 into a rotation, in the desired direction, of shaft 15.

Two plates 81^1 and 81^2 are arranged to constitute ratchet wheels acting in opposite directions and these are keyed onto shaft 15. A lever 83, articulated on shaft 15, oscillates under the control of a crank lever 84 driven by shaft 66. The amplitude of the oscillation is greater than the space between two teeth, if there is no driving mechanism, or greater than half this distance, if there is a drive as specified in the case of Fig. 20. This difference determines the amplitude of the rotation of shaft 15. The free end of lever 83 bears two pawls 85^1 and 85^2 acting in opposite directions, placed respectively opposite cogs 82^1 and 82^2. The pawls are keyed to their axes 86 which also carries lever 87 the free end of which fitted with a roller is engaged in a circular slot 88 which has shaft 15 for its center, and hollowed out for instance in a plate 89 capable of being displaced directly or indirectly by lever 14 of one of the gear-shifts K of the neutral position type such as described. So long as part 14 occupies the neutral position, neither of the two pawls can act on cogs 82^1 or 82^2 and the gear then engaged is retained. If plate 89 is displaced by the action of the gear-shift, say towards the right of Fig. 23, lever 87, by tipping permits pawl 85^1 to reach teeth 82^1. This pawl therefore causes corresponding plate 81^1 and also shaft 15 to turn the space of one tooth. During the oscillation in the opposite direction of lever 87, pawl 85^1 slides along the following tooth 82^1 which has placed itself opposite plate 89, which would return lever 87, fitted with pawls, to its neutral position shown on Fig. 23, even if the tell-tale lever had not ensured this duty. A similar operation takes place when pawl 85^2 enters into action when plate 89 is driven towards the left of Fig. 23 through the operation of the gear-shift.

As mentioned above, lever 14 can act either directly or indirectly on plate 89, to move it in the desired direction. Fig. 23 shows an indirect control through an anchor

shaped pendulum 90, the lower arms of which penetrate respectively into coils 91^1 and 91^2, each capable of attracting the corresponding arm when excited by an electric current at the moment when lever 14 makes contact with electric contact 38^1 or 38^2 established in its circuit.

Figs. 24 and 25 show an arrangement permitting the adaptation of the invention to existing gear boxes controlled by a hand lever working in a gate 175 operated by the driver.

This can be arrived at by replacing the said lever by a part 176 capable of assuming, in the gate, all the characteristic positions of the lever that have been suppressed by means of intermediary rotating shaft 15.

If one decomposes the movement part 176 must make, one ascertains that it must move lengthwise along the slots of the gate and transversally to pass from one slot to the next. Longitudinal movement is effected by a cam 177 fitted loosely to shaft 15 and in which a slot 178 has been made to accommodate roller 179 fixed to rod 180 guided by rod 181 parallel to the slots. This rod bearing at the end opposite to that of the roller, a sliding sleeve 182 bearing part 176 and drawn towards the roller by spring 183.

The transverse movement is controlled by a plate 184 sliding on the gate and against which part 176 presses constantly due to spring 183. If plate 184 propelled by cam 185, keyed to shaft 15 covers the slot uniting the two slots, the longitudinal displacement of the part will follow the said slot. If, on the contrary plate 184 uncovers the communication slot, part 176 follows the slot it is engaged in until it can enter this passage and under the action of spring 183 pass into the next slot when its movement stops. To reverse the movement, cam 185 tends to move the plate forward and is prevented from doing so by part 176. Another spring, inset between plate 184 and its control lever 187, is compressed and as it is more powerful than spring 183, it pushes part 176 back through the communication slot as soon as it comes opposite the opening during its longitudinal movement.

Cam 177, mounted loose on shaft 15, is driven by cam 185 with a slight retard to enable part 176 to effect part of its longitudinal movement before commencing, in case of need, its transverse movement.

Whatever arrangement may be selected it will be seen that shaft 15 can always be made to turn in the necessary direction and by the exact angular amount to ensure the changing over between combinations whether upward or downward. In the case of four combinations (three changes) the angular displacement for a change may be of any importance providing it is equal to or less than one third of the circumference.

For the sake of convenience in giving explanations the value of the angle has been taken as a fraction of the circumference the denominator of which is equal to the number of the characteristics positions of the said shaft (1/4 for four combinations).

One should note that in the case of snatch gear-boxes such as that shown in Fig. 20, the automatic operations are not sufficient to ensure a proper change. The operation of ordinary (non-automatic) gear-boxes of this kind effected by a driver necessitates at least five operations: 1, The driver begins by releasing the accelerator to arrest power production and limit the speed of the engine during the following declutching; 2, he declutches the engine, as this is indispensable, to permit of the displacement of the sliding gear; 3, he makes the gear slide in the correct direction to engage with the new combination; 4, he lets in the clutch with the engine which has assumed a new speed; and 5, he presses on the accelerator so as to resume normal functioning.

As levers 62, 62^a and 62^b (Fig. 20) effect the automatic operation of the sliding gears without the knowledge of the driver, the latter, having no indication, leaves the accelerator in any position. A special device has to be provided, hereinafter denominated synchronizer (Figs. 26 to 29) which will intervene in order to limit the speed of the engine when it is automatically thrown out of gear by cam 61 and lever 62. The synchronizer may moreover be so designed that in addition to its principal function (Fig. 26) it may ensure the engagement of the sliding gear into the new combination by realizing an approximate but sufficient synchronization (Fig. 27) or an absolutely correct synchronization (Fig. 28) between the gears that are to be engaged, and indeed to prevent engagement until synchronization of the gears has been attained.

On Fig. 26 the main shaft of the engine or any other shaft connected with it in rotation has been denominated 2^a and 2^b denominates the shaft revolving with shaft 2 between the main clutch 60 (Fig. 19) and the gear-box. The whole is therefore erected in parallel with the main clutch 60 of the vehicle. Shaft 2^a driven by friction member 93, with properly loaded springs 93^1, a tapped sleeve 94 on which is screwed a nut 95 driven by shaft 2^b but sliding along it.

If shaft 2^a turns faster than shaft 2^b, nut 95 will move in relation to the said sleeve away from friction member 93 and it moves with it part 96 with finger 96^1 from the position marked in solid lines in Fig. 26 to the position shown in dotted lines. This finger also frees a tappet 98 which, propelled by spring 99, breaks, at 97^1 the ignition circuit of the engine, which reduces the speed of shaft 2^a. As soon as this speed becomes lower

than that of shaft 2^b the nut screws in the opposite direction on sleeve 94 until finger 96^1, pushing back the tappet, re-establishes ignition circuit 97. An equilibrium is thus established which constantly maintains shafts 2^a and 2^b at practically the same speed.

In order that the synchronizer may only intervene during the declutching periods, tappet 98 is also maintained in the position in which it permits the ignition of the engine, by a bolt 100 borne by rod 101, connected to the mechanism 62 of the main clutch (Fig. 20). When this loosens, the bolt moves in the direction of the arrow (Fig. 26) and leaves tappet 98 under the sole control of the synchronizer.

When the clutch is engaged, bolt 100 re-establishes ignition by compressing spring 99 whatever the position of the synchronizer may be at that moment.

If one completes the lay-out described in Fig. 20 by a synchronizer of this sort one obtains the following working. When there is a change, the gear-shift, coming into an active position, sets in motion in the proper direction, as explained (Fig. 20) shaft 15 which, from the commencement of its rotation, releases the clutch, sets the synchronizer into action by removing part 100 and the gear box transmits no power.

The sliding gear concerned is not yet thrown out of gear; in consequence shaft 2^b being still connected through it to the driving wheels retains, practically the same speed it had when the operation commenced, for example v^1 if the change is upward. The engine controlled by the synchronizer therefore also retains this speed; the release of the sliding gear previously in operation, then the throwing in gear of the new one, are easily effected since the gear-box is no longer transmitting any effort and everything happens as if the driver had effected the proper operation; but the engagement of the sliding gear has resulted in causing an off-set on shaft 2^b which exists between speed v^1 and v^2 or else v^2 and v^1 as explained in Fig. 1. The synchronizer immediately imposes this modification in pace to the engine and the operation closes by normal engagement of the clutch although the driver who has no warning, has left his accelerator in an indefinite position; and the car proceeds on the new combination.

In the above description the synchronizer is used only to control engine speeds while out of gear.

One can also employ a single synchronizer to ensure sufficient synchronization of the speed of the gears to be engaged. Fig. 27 shows the lay-out of a synchronizer of this sort established and controlled by the clutch as set forth for Fig. 26, but which acts on tappet 98 cutting out the ignition of the engine through rod 96 connected to the end of rocking lever 96^2 the other end of which controls tappet 98.

Between any one of the operating arrangements described Figs. 19, 20, 23 and 30 and shaft 15, a driving mechanism has been provided consisting for instance of a tapped sleeve 104 engaged on a threaded part with a long and reversible pitch, of shaft 66. Sleeve 104 carries extensions 105 engaged in slots 106^0 provided parallel to the axis in a fork 106 solid with shaft 15. The displacements of the sleeve, in both directions are transmitted by rod 102 in the center of rocking lever 96^2 and are limited by two checks 107^1 and 107^2. The result is that in order that shaft 15 may be driven by shaft 66, sleeve 104 must be in contact with one or the other of its checks according to the sense of rotation of shaft 66.

Sleeve 104 is returned to its neutral position by springs 109^1 and 109^2.

The functioning is as follows: Contrary to what has been explained for Fig. 26, the synchronizer does not enter into action immediately the main clutch is loosened but one endeavors from that moment, to bring the engine in the neighbourhood of the speed it should have for the engagement of the new combination, that is to say of corresponding driving speed v^2 if the upward change is commenced at v^1 because speed v^2 is that which gives exact synchronization of the gears. The off-set in the speeds which must slow up the engine if the change is upward, is obtained for instance by acting on the ignition by means independent of the synchronizer and it is only when engagement has been effected that the synchronizer enters into action to keep this speed correct until the moment when the main clutch is tight.

These independent means are constituted by sleeve 104, which for an upward change makes contact with its check 107^1 due to the direction of rotation of shaft 66 and this displacement, through rocking lever 96^2 always interrupts the ignition of the engine notwithstanding the position of the synchronizer and this in any case diminishes the original speed v^1 and brings it nearer to v^2. If the change had been downward and consequently commenced at v^2, sleeve 104, contacting with its check 107^2 would have maintained ignition notwithstanding the position of the synchronizer and as at this moment the main clutch is loose there is an acceleration of the engine from v^2 to v^1.

During this deceleration or acceleration of the engine shaft 15 continues to rotate and successively causes the throwing out of gear of the gears of the combination that is being abandoned and the engagement of the gears one is taking up. At this moment shaft 15 has effected half a turn and the propelling mechanism intervenes so that no power may be exerted through sleeve 104. The latter

takes up its intermediary position and allows the synchronizer to maintain the engine at speed v^2 or v^1 of the new combination until main clutch 60 is tight.

It may so happen that the fact of making the engine tend towards its speed when engaging the new combination at the commencement of the change may cause lever 14 to leave its active position which determines the operation before the propelling effect acting on shaft 15 has had time to take effect.

The result of this would be that the operation commenced could not be completed because shaft 66 would cease turning; to avoid this difficulty tell-tale lever 14 is duplicated by an auxiliary lever 14^a which moves in the same way as the tell-tale lever, its active positions however being maintained until the completion of a change that has been commenced. This result is attained by combining the movement of this lever to that of sleeve 104 which only returns to its intermediary position, corresponding to the neutral position of lever 14^a when propulsion has taken place. One can therefore be sure that once the operation has been commenced it will be completed normally.

It may be advantageous to regulate the control of the synchronizer by bolt 100 through cam 123 carried by shaft 15 or any shaft 15^a connected with it and which bears, at each stopping position of shaft 15, corresponding to the utilization of combination bosses 123^a which, coming opposite rod 101, prevent the operation of the synchronizer. On the contrary when shaft 15 rotates for a change, bolt 100 is withdrawn, due to recess 123^b, and the synchronizer is free to operate. As in the case of certain changes the synchronizer should never act, for instance from rest to first forward combination of rest to reverse or inversely, the cam has no hollows such as 123^b in the corresponding portions.

One might suppress bolt 100 and have recourse to a second ignition switch, controlled by rod which would cut out ignition when the rod engages with hollow 123^b.

In this way when the second ignition is cut out the synchronizer commences to function by regulating the normal ignition circuit. If on the other hand ignition is established on the second circuit by bosses 123^a the synchronizer while still functioning remains without action.

The same results could have been attained with a sliding sleeve such as 104 by replacing in Fig. 20, straight gears 65 by helical gears and using side play which would have been allowed, to produce the same effect as that obtained by sleeve 104.

One could obtain an absolutely precise result by having recourse to two auxiliary shafts, controlled by shaft 2 or 2^b, so that one materilizes the correspondingly higher speed with regard to the speed of the said shaft 2 or 2^b and the other materializes the correspondingly lower speed and one sets up a synchronizer on each of the said auxiliary shafts (Fig. 27). In this way one of the synchronizers materializes arrival speed v^2 of an upward change commenced at speed v^1 of shaft 2 or 2^b. The other synchronizer materializes arrival speed v^1 of a downward change commenced at speed v^2 of shaft 2 or 2^b. The displacement of sleeve 104 which occurs in different directions for upward and downward changes brings into play the suitable synchronizer.

In order to ensure proper completion of any operation commenced one might have recourse to the lay-out shown in Fig. 29. Lever 14^a is engaged loosely on shaft 15 (Fig. 29) so that it may come in contact with its two contacts 38^a and 38^b which two springs 225 prevent it touching.

This lever is placed against a plate 227, solid with shaft 15 and in the projecting rim of which two notches 226 have been provided these are wider than the lever and into each of which it can penetrate to half depth under pressure of spring 228 engaged on shaft 15 and bearing on a suitable thrust.

The number of correctly disposed notches corresponds with the number of characteristic positions of shaft 15.

When shaft 15 revolves the rim of plate 227 presents its bosses to lever 14^a and compresses spring 228 and pushes the lever back so that these bosses can go by. The friction of each boss against lever 14^a is sufficient to draw it along and cause it to touch suitable contact 38^a or 38^b, which duplicates the contact of tell-tale lever 14 so that it can move away without the movement being disturbed. When shaft 15 has reached its following characteristic positon, lever 14^a drops into the following notch and friction drive ceasing springs 225 return lever 14^a to its neutral position. Any operation commenced will therefore be satisfactorily completed.

Fig. 28 shows an assembly completing that of Fig. 20 which permits of absolutely correct synchronization between the gears about to be engaged. On intermediary shaft 73 one fits loose auxiliary gear wheels 110^1, 110^2, 110^3 and 110^4 adjoining gear wheels 74^1, 74^2, 74^3 and 74^b, and these co-operate respectively with sliding gears 59^1, 59^2; 59^3 and driving wheel 75^a, these having exactly the same teeth as the gears they engage with.

The sliding gear of the combination which is to be used must first be caused to engage, for instance that denominated 59^2 with corresponding auxiliary gear 110^2 which presents no difficulty since up to that moment this gear is loose on shaft 73. By means of a suitable synchronizer one then brings the engine to a speed such that the speed of gear wheel 74^2 with which sliding gear 59^2 must

engage, will become equal to that of auxiliary gear 110^2 for that is exactly the speed which corresponds with the synchronization of the gearing since auxiliary gear 110^2 has already engaged with sliding gear 59^2. The synchronizer inserted between each auxiliary gear, such as 110^2 and shaft 73 which remains connected with the engine by a slight friction in clutch 60 for instance therefore imposes on the latter a rotating speed corresponding to the correct linear speed of the wheel, such as 74^2 fixed to the said shaft. To produce such a synchronizer one provides, for instance on a part of shaft 75 included between each pair of auxiliary gears 110^1 110^2 and 110^3 110^4, a quick or reversible thread 111 on which a nut 112 engages. This nut drives a sleeve 113 on the inside face of which two opposite grooves 113^0 have been provided into which lugs 114 penetrate, these lugs being borne by each of the parts 115 acting on the corresponding auxiliary gear through friction member 116. When one of the sliding gears, 59^2 for example, comes into contact with gear 110^2, sleeve 113 turns with nut 112 at a speed which materializes that which the corresponding gear 74^2 which is to engage with the said sliding gear must assume.

If this speed be lower than that of shaft 73, the engine is revolving too fast and shaft 73 with it and nut 112 moves along the threaded portion 111 in a direction for which lever 117, driven by the said nut, interrupts ignition at 118, this causing the engine to slow down. If the speed is higher firing continues normally and the engine accelerates.

The disposition of the gears in relation to the corresponding gear wheels is such that these gears shall have no effect when disengaging but that the gear involved (110^2) shall contact with the corresponding sliding gear 59^2 before gear wheel 74^2.

In the meantime synchronization takes place and this can be made as long as is considered desirable by giving an appropriate section to cams such as 58^2 (Fig. 18) which control the movement of the sliding gears. In the end the engagement of the new combination is correctly effected.

In addition to acting as a speed regulator and as a synchronizer, devices of this kind can also, in view of the energy they can produce and which limited only by the value of their friction, execute any supplementary function which may be considered desirable, for instance prevent engagement of the sliding gear occurring before the synchronous speed has been attained.

For this purpose one combines, with each of the different sliding gears, a bolt 119 loaded by spring 119^1 towards its engagement position in which it prevents the sliding gear (59^2 for instance) from engaging with corresponding gear wheel (74^2).

This bolt acts, for instance on the fork which controls the movement of the sliding gear in either direction. In order that engagement may take place the bolt must be withdrawn and the synchronizer causes this to happen through articulated connections 121 controlled by lever 117 aforementioned at the moment when the speed of gear wheel (74^2) has become equal to that of auxiliary gear 110^2.

In order that the displacements of levers 62^a and 62^b controlled by cams 58^a and 58^b (Fig. 19) may be made independent of those of forks 120 each fork 120 is inserted between two springs 122 on a rod 123 driven by lever 62^a or 62^b so that the fork may slide on this rod. When the sliding gear moves one way or the other, the fork makes contact with one of the bolts 119 and a spring 122 is compressed whilst rod 123 continues its movement. When the bolt is withdrawn the release of the spring causes a sudden engagement. The same result could be obtained by fitting cam 58^a or 58^b elastically on its shaft 15, for instance by means of a spring. When the sliding gear comes into contact with the bolt, the cam stops while shaft 15 continues its rotation and cocks the spring. This causes the cam to complete the rest of its travel once the bolt has been disengaged.

We have assumed so far that the synchronizer acts on the ignition of the engine. It might act in the same way in any other appropriate function of the latter. For instance if suction is not utilized for the gear shift one could submit the engine throttle opening to the control of the synchronizer by a mechanism similar for instance to those utilized already on vehicles fitted with a speed regulator.

Up to the present we have considered only automatic changes between combinations of the gear-box thus implicitly assuming the vehicle to be in motion. The controls controlling the starting of the vehicle forward or in reverse or stoppage cannot be made automatic since they must be left to the discretion of the driver and one can be satisfied to use the present arrangements to operate them and to have recourse for speed changes to any one of the devices described above.

But it may seem more logical to utilize the mechanism provided for automatic changes to control starting forward, in reverse or stopping, as this permits of suppressing the actual methods of control (clutch pedal and gear lever) and to substitute a very simple movement, for instance displacement of a knob, of a hand lever etc., to all the complex manoeuvres a driver must execute with the present methods (simultaneous operation of the clutch, the accelerator and the gear lever and, on hills, the hand brake).

The following modifications are therefore made in the arrangements already described.

One constitutes shaft 15 as indicated for

instance in connection with Fig. 20, but with as many postions as there are working combinations, this term denominating the total number of speeds possible both in forward and reverse plus a combination corresponding with rest. For instance and as will be assumed hereinafter for a gear-box with four forward speeds, a reverse and a rest position (commonly known as neutral) there will be six possible stopping places for shaft 15 and the change from one combination to the next will take place for one sixth of a turn. Cam 61 controlling main clutch 60 (Fig. 20) may have no recess in the neutral position so that it cannot, at this moment, cause tightening of said clutch 60. The synchronizer must come into action for all the combinations above the lowest for forward or reverse. If there is but one synchronizer for all the combinations it must be neutralized from neutral to forward speed or from neutral to reverse as otherwise the input shaft of the gear-box having stopped the engine would stop. In such a case one has recourse to a cam 123 as described in connection with Fig. 27.

In the form of assembly represented in Figure 30, the specific devices illustrated in Figures 11, 15, 20 and 26 to 28 have been combined. It would not appear necessary to describe the coaction of these devices inasmuch as the separate functions have been set forth in other parts of the specification.

What I claim is:—

1. In combination, a motor including an electric source and a driving shaft, a driven shaft, means interposed between said driving and driven shaft and operative to couple the former and the latter in various speed ratios, electrical means controlling displacements of said means, a lever controlling said electrical means, and means responsive to both changes in the motor load and variations in speed of one of said shafts to actuate said lever.

2. In combination, a motor including a driving shaft, a driven shaft adapted to be coupled to said driving shaft in various speed ratios, means including a fixed terminal operative to effect changes in speed ratios of said driving and driven shaft, a movable element operative to contact with said terminal to actuate said means, and means operative by, and in proportion to, changes in load on the motor to displace said movable element into and out of contact with said terminal.

3. In combination, a motor including a driving shaft, a driven shaft adapted to be coupled to said driving shaft in various speed ratios, means including a fixed, terminal operative to effect changes in speed ratios of said driving and driven shaft, a movable element operative to contact with said terminal to actuate said means, and means responsive to both changes in load on the motor and variations in speed of one of said shafts to displace said movable element into and out of contact with said terminal.

4. In combination, a motor including a driving shaft, a driven shaft, means for coupling said driving and driven shaft in various speed ratios, a lever controlling said means, means operative by changes in load on the motor and by variations in speed of one of said shafts to actuate said lever, and suction operative means for retarding displacement of said lever.

5. In combination, a motor including a driving shaft, a driven shaft, means for coupling said driving and driven shaft in various speed ratios, a lever controlling said means, means operative by changes in load on the motor and by variations in speed of one of said shafts to actuate said lever, and means operative by the suction of the motor to retard displacement of said lever.

6. In combination, a motor including a driving shaft, a driven shaft, means for coupling said driving and driven shafts in various speed ratios, a lever controlling said means, means operative by changes in load on the motor and variations in speed of one said shafts to actuate said lever, and means operative by the driving shaft to oppose displacement of said lever.

7. In combination, a motor including a driving shaft, a driven shaft, means for coupling said driving and driven shafts in various speed ratios, a lever controlling said means, means operative by changes in load on the motor, by variations in speed of one of said shafts to actuate said lever and by the action of an antagonist spring, and means operative by said driven shaft to vary the relative effect of said spring on said lever.

8. In combination, a water-cooled motor provided with a driving shaft, a pump driven from said driving shaft, means operative by changes in pressure exerted by liquid discharges from said pump to change the relative speeds of said driving and driven shafts and means operative by variations in the suction exerted by the motor to change the relative speeds of said driving and driven shafts.

9. In combination, a motor including a driving shaft, a driven shaft, means for coupling said driving and driven shafts in various speed ratios, a lever controlling said means, means operative by changes in the load on the motor and by changes in speed of one of said shafts to actuate said lever and means operative to prevent actuation of said lever until one of said shafts attains any one of several predetermined speeds.

10. In combination, a motor including a driving shaft, a driven shaft adapted to be coupled to said driving shaft in various speed ratios, means operative to effect changes in speed ratios between said driving and driven shaft, a movable element operative to acutate said means, said movable element being in-

dependent of, and positioned to move into and out of contact with, said means, and means operative by changes in suction exerted by the motor to displace said moveable element into and out of contact with said first named means.

11. In combination, a motor including a driving shaft, a driven shaft, means for coupling said driving and driven shafts in various speed ratios, a lever controlling said means, means operative by changes in load on the motor and by variations in speed of one of said shafts to actuate said lever, a spring reacting on said lever, a roller contacting with said lever, a second lever positioned in contact with said roller, and means operative by variations in suction exerted by the motor to displace said roller.

12. In combination, a motor including a driving shaft, a driven shaft, means for coupling said driving and driven shafts in various speed ratios, a lever controlling said means, means operative by changes in load on the motor and by variations in speed of one of said shafts to actuate said lever, a spring reacting on said lever, a roller contacting with said lever, a second lever positioned in contact with said roller, and means actuated by the operator to displace said roller.

13. In combination, a motor including a driving shaft, a driven shaft adapted to be coupled to said driving shaft in various speed ratios, means operative to effect changes in speed ratios between said driving and driven shaft, a moveable element operative to actuate said means, said moveable element being independent of and positioned to move into and out of contact with said means, and means operative by changes in suction exerted by the motor and by variations in speed of the driven shaft to displace said moveable element into and out of contact with said first named means.

14. In combination a motor including a driving shaft, a driven shaft adapted to be coupled to said driving shaft in various speed ratios, means operative to effect changes in speed ratios between said driving and driven shaft, a moveable element operative to actuate said means, said moveable element being independent of and positioned to move into and out of contact with said means, means operative by changes in suction exerted by the motor and by variations in speed of the driven shaft to displace said moveable element into and out of contact with said first named means and a plurality of resilient means of increasing strength entering successively in action in order to compensate the action of increasing speeds of the driven shaft on said means operative to displace said moveable element.

15. In combination a motor including a driving shaft, a driven shaft, means for coupling said driving and driven shaft in various speed ratios, a rotatable cam-shaft to actuate said coupling means, a reversible motor operative to rotate said shaft in one direction for increasing speeds and in opposite direction for decreasing speeds, means including a lever, operative by changes in speed of one of said shafts and by variations in load on first named motor, to actuate said reversible motor in a predetermined direction, said lever being operative to reverse the direction of rotation of said motor.

16. In combination, a motor including a driving shaft, a driven shaft, means for coupling said driving and driven shaft in various speed ratios, a rotatable cam shaft to actuate said coupling means, a rotatable shaft and a pair of clutches operative to rotate said cam-shaft respectively in one direction for increasing speeds and in opposite direction for decreasing speeds and means including a lever operative by changes in speed of one of said shafts and by variations in load on the motor, to actuate one of said clutches.

17. In combination, an internal combustion engine provided with an ignition circuit, a driving shaft, a driven shaft, means for coupling said driving and driven shaft in various speed ratios, a first rotatable member coupled to one of said shafts and having a threaded portion rigidly attached thereto, a second rotatable member coupled to the other shaft, a threaded element mounted on said second rotatable member and engaging with said threaded portion the axial displacements of said threaded member being obtained by differences in speed of said rotatable members and said displacements controlling the ignition circuit.

18. A structure as defined in claim 17 in combination with means operative to prevent the opening of said ignition circuit until the driving and driven shafts have attained a predetermined speed ratio.

19. In combination, an internal combustion engine provided with an ignition circuit, a driving shaft, a driven shaft, shifting gear means for coupling said driving and driven shaft in various speed ratios, a first shaft coupled to one of said shafts and carrying one of the pinions of the shifting gear and an auxiliary identical pinion loosely engaged on said shaft besides said pinion, a threaded portion rigidly attached to said first shaft, a threaded element rotatably mounted on said threaded portion and slidably attached to said auxiliary pinion, a second shaft coupled to the other of the driving and driven shafts and bearing the displaceable pinion of the shifting gear, means for shifting said displaceable pinion to bring it in engagement with said auxiliary pinion, means operative by the differences in speed between the threaded element slidably at-

tached to said auxiliary pinion and the threaded portion of said first shaft for controlling the ignition circuit until said threaded element and said auxiliary pinion have attained the same speed as said first shaft and means for bringing the pinions of the shifting gear in driving relation.

20. A structure as defined in claim 19 in combination with means operative to prevent the engagement of the pinions of the shifting gear after the displaceable pinion has been connected in driving relation to said auxiliary pinion until said auxiliary pinion has attained the same speed as the nondisplaceable pinion.

In testimony whereof I affix my signature.

GASTON FLEISCHEL.