March 20, 1956 C. F. OLSON 2,738,999

HINGE JOINT FOR ANTENNA

Filed Jan. 8, 1953

Fig. 2

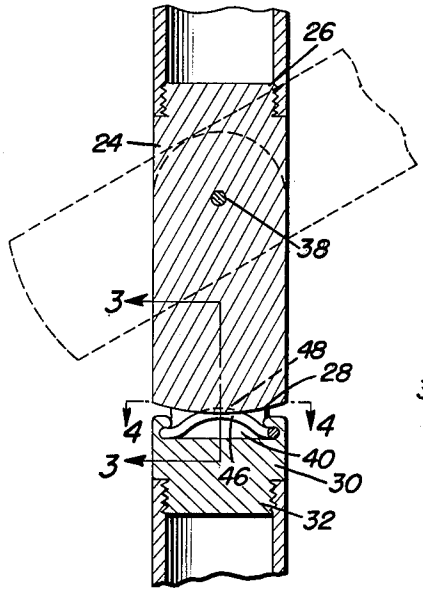

Fig. 3

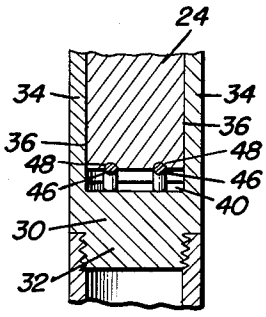

Fig. 1

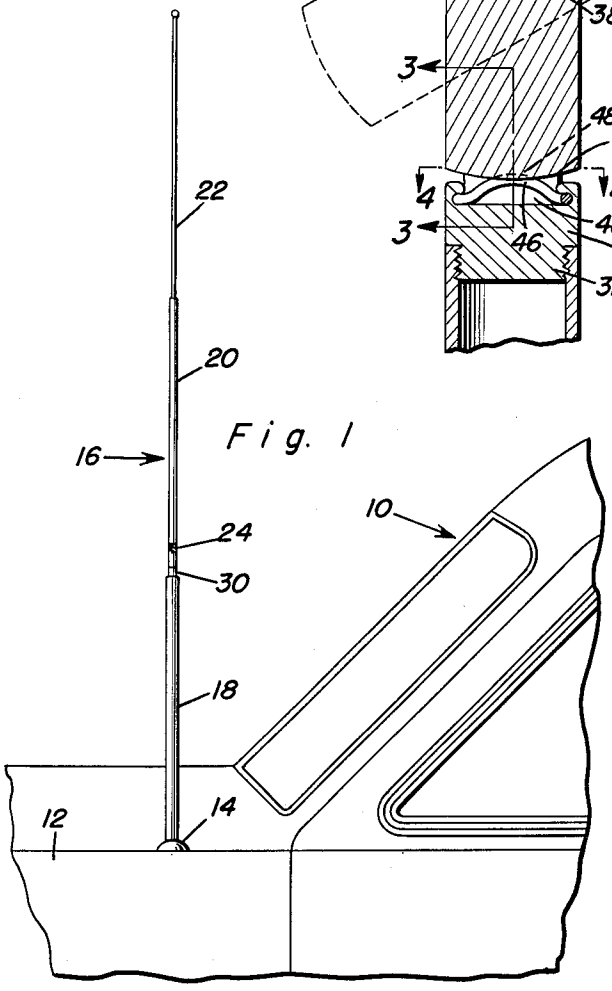

Fig. 4

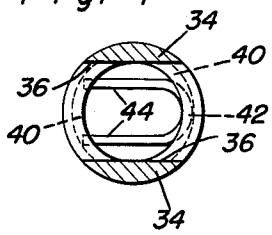

Carl F. Olson

INVENTOR.

BY Clarence A. O'Brien and Harvey B. Jacobson

Attorneys

United States Patent Office 2,738,999 Patented Mar. 20, 1956

2,738,999

HINGE JOINT FOR ANTENNA

Carl F. Olson, Prince Rupert, British Columbia, Canada

Application January 8, 1953, Serial No. 330,263

2 Claims. (Cl. 287—99)

This invention relates to radio antennas and more particularly to antennas for use on automobiles and the like.

The principal object of this invention is to provide an automobile radio antenna with a pivotal coupling so that the same will not be bent out of shape should the vehicle be driven into a confining space, such as a garage or under a tree.

Another object of this invention is to provide a coupling attachment which may be readily adapted to existing antennas.

These together with other objects and advantages which will become subsequently apparent reside in the details of construction and operation as more fully hereinafter described and claimed, reference being had to the accompanying drawings forming a part hereof, wherein like numerals refer to like parts throughout, and in which:

Figure 1 is a side elevation showing a portion of an automobile with antenna attached;

Figure 2 is a longitudinal section of a portion of an antenna embodying the coupling attachment;

Figure 3 is a transverse section taken substantially along the lines 3—3 of Figure 2; and

Figure 4 is a horizontal section taken substantially along line 4—4 of Figure 2.

Referring now more particularly to Figure 1, reference numeral 10 designates generally an automobile or the like having fenders 12, as is conventional. A securing element 14 attaches the lower end of an antenna 16 to the fender and the antenna includes a plurality of telescoping sections 18, 20 and 22. A suitable lead-in wire (not shown) connects the antenna to a radio in the interior of the vehicle. Fastening element 14 is formed of hard rubber or the like and serves to insulate the antenna from the chassis of the vehicle. The foregoing structure is conventional and the same forms no part of this invention, being provided merely to illustrate the environment in which the invention is used.

With reference now to Figure 2, numeral 24 indicates a first coupling section having a threaded upper end 26 and an arcuate lower end surface 28, as will presently appear.

The particular form of coupling shown is in the form of an attachment which may be readily and conveniently applied to any conventional antenna, but it is to be understood that this invention contemplates the manufacture of an antenna having the coupling formed integrally therewith.

A second coupling section 30 has a threaded lower end 32 and is provided at its upper end with a pair of spaced longitudinally extending legs 34, as shown in Figure 3. Legs 34 are formed with flat inner surfaces 36, as clearly shown in Figures 3 and 4. These surfaces are adapted to receive therebetween the lower end of section 24 and pin 38 extends through the upper ends of the legs 34 and through an intermediate portion of section 24 to provide a pivotal connection between the two coupling sections.

Disposed at the juncture of the spaced legs and the

section 30 is a pair of horizontally opposed arcuate retaining grooves 40. These grooves are adapted to receive, respectively, the bight portion 42 and legs 44 of a U-shaped spring. As will be clear from Figure 2, the bight portion and the free ends of the legs of this spring are coplanar, whereas an intermediate portion 46 is disposed arcuately upwardly.

Now it will be seen that when the assembly is in the position shown in full lines in Figure 2, the surface 28 of section 24 will engage the arcuate portion 46 of the U-shaped spring and will compress the same to maintain the two sections in aligned relationship. Should an abnormal force be applied to the upper end of antenna 16, either forwardly or rearwardly in Figure 1, the upper section will "break" and fold upon itself, as shown in dotted lines in Figure 2.

As shown in Figure 3, the surface 28 of section 24 is provided with a pair of parallel grooves, as at 48, to frictionally receive spring portions 46 and prevent spreading or distortion thereof. In this manner, a most efficient engagement between the surface 28 and the U-shaped spring is effected.

It will now be apparent that this coupling may be applied to any conventional antenna by merely transversely cutting the same and internally threading the resulting end portions to receive the threaded ends 26 and 32 of coupling sections 24 and 30, respectively. In this way, any conventional antenna may be provided with the desirable characteristics of this coupling.

Thus, it will be seen that this invention obviates bending and distortion of vehicle antennas which result when such vehicles are moved into a confining area, such as a garage or under a tree.

From the foregoing, the construction and operation of the device will be readily understood and further explanation is believed to be unnecessary. However, since numerous modifications and changes will readily occur to those skilled in the art, it is not desired to limit the invention to the exact construction shown and described, and accordingly, all suitable modifications and equivalents may be resorted to, falling within the scope of the appended claims.

What is claimed as new is as follows:

1. In a pivotal coupling for use with an automobile radio antenna, a first coupling section having an upper end and an arcuate lower end surface, a second section having a pair of longitudinally extending spaced legs at its upper end and a lower end, the lower end of said first section being disposed between the legs of said second section, a transverse pin extending through said legs and said first section pivotally interconnecting the first and second sections whereby the arcuate lower end surface of the former is disposed closely adjacent the juncture of said legs and the second section, the upper end of the second section having opposed arcuate grooves formed between its legs, a U-shaped spring element having its bight portion and the free ends of its legs received respectively in said grooves, the intermediate portions of said legs being deformed upwardly to engage said arcuate lower end surface and maintain said sections in longitudinal alignment, the arcuate lower end surface of said first section having a pair of parallel grooves therein for receiving the legs of said spring element.

2. A pivotal coupling for use with an automobile radio antenna comprising a first coupling section having a threaded upper end and an arcuate lower end surface, a second section having a pair of longitudinally extending spaced legs at its upper end and a threaded lower end, a transverse pin pivotally connecting the upper end of said spaced legs to an intermediate portion of said first section, a resilient member disposed between said legs engageable with the arcuate lower end surface of said first

section, said resilient member comprising a U-shaped member having its bight portion and the free ends of its legs frictionally engaged with said second section, the intermediate portions of said legs being deformed upwardly to engage said lower end surface.

References Cited in the file of this patent

UNITED STATES PATENTS

2,083,140 Brantingson ---------- June 8, 1937
2,135,487 Askue ---------- Nov. 8, 1938
2,438,676 Nickle et al. ---------- Mar. 30, 1948
2,497,687 Pickett et al. ---------- Feb. 14, 1950

FOREIGN PATENTS

367,552 Great Britain ---------- Feb. 25, 1932
606,749 France ---------- Mar. 13, 1926