US 20070007312A1

(19) United States

(12) Patent Application Publication

(10) Pub. No.: US 2007/0007312 A1

(43) Pub. Date: Jan. 11, 2007

Kraus, Jr.

(54) CLOTHING HANGER

(76) Inventor: **Thomas E. Kraus Jr.**, Pompano Beach, FL (US)

Correspondence Address:
MALIN HALEY AND DIMAGGIO, PA
1936 S ANDREWS AVENUE
FORT LAUDERDALE, FL 33316 (US)

(21) Appl. No.: **11/160,716**

(22) Filed: **Jul. 6, 2005**

Publication Classification

(51) **Int. Cl.**
A41D 27/22 (2006.01)

(52) **U.S. Cl.** **223/85**

(57) **ABSTRACT**

A clothing hanger for engaging the waist portion of a t-shirt or other shirt garment and suspending the shirt from a horizontal support in a closet to prevent wrinkling and other distortions in the shape of a shirt that are often caused by conventional hangers. The t-shirt hanger comprises a pair of rigid, horizontal clamp members having a manually actuated tab attached to a top portion of each member, a C-shaped hook attached to the tab of one of the clamp members, and a spring for engaging both clamp members and for providing the force to clamp and support the waist portion of a shirt across the entire width of the clamp members.

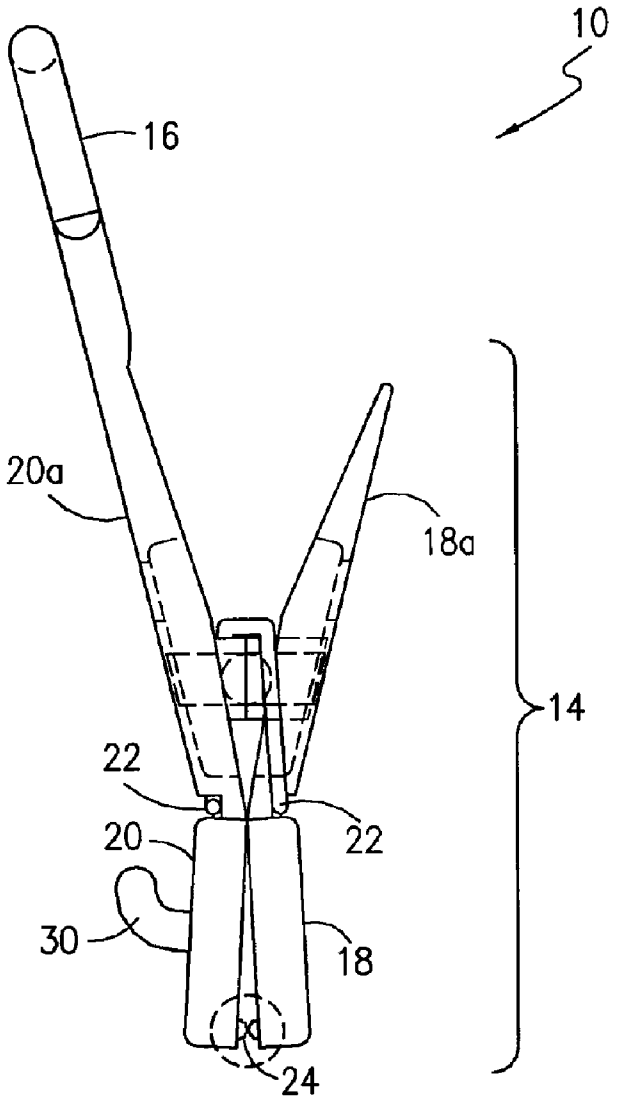

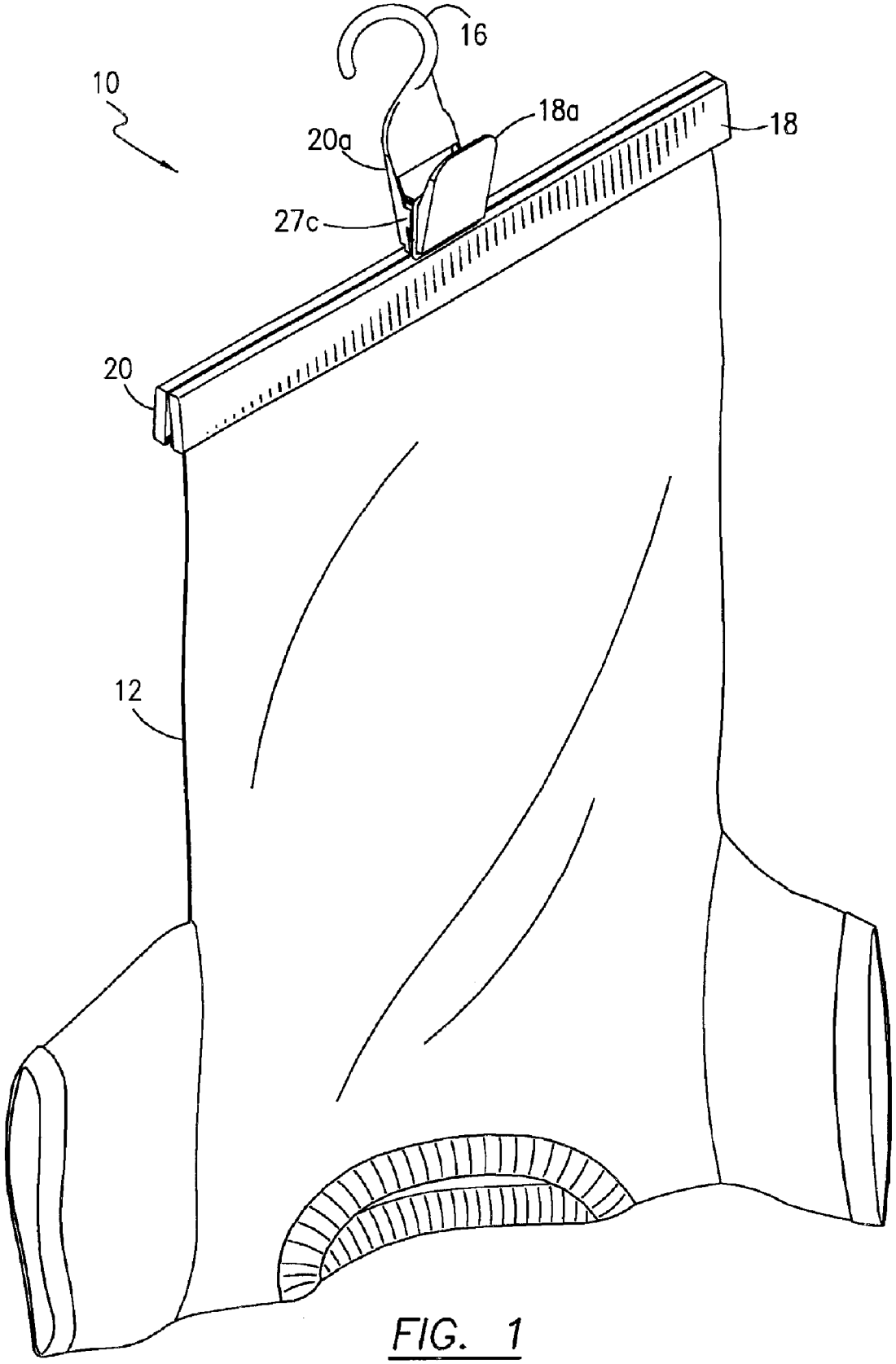

FIG. 1

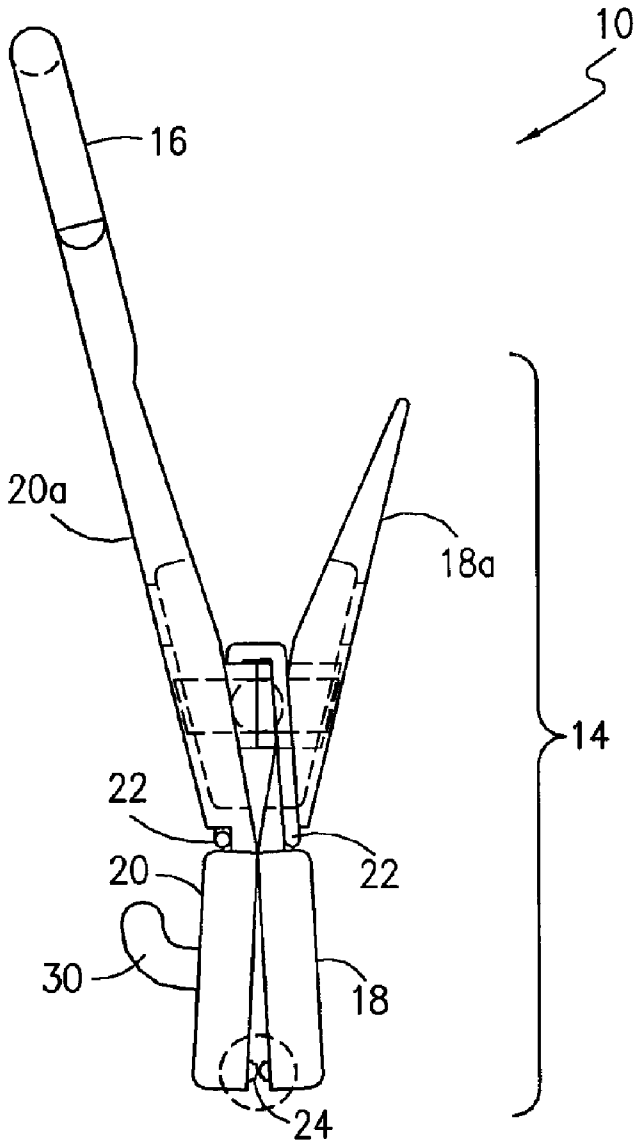

FIG. 2

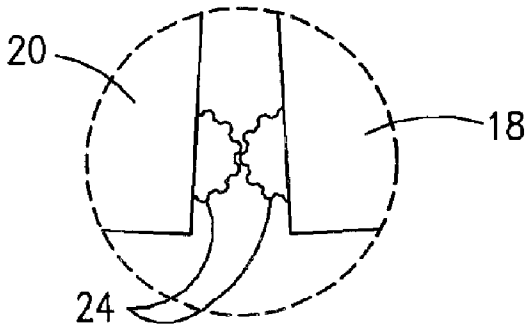

FIG. 3

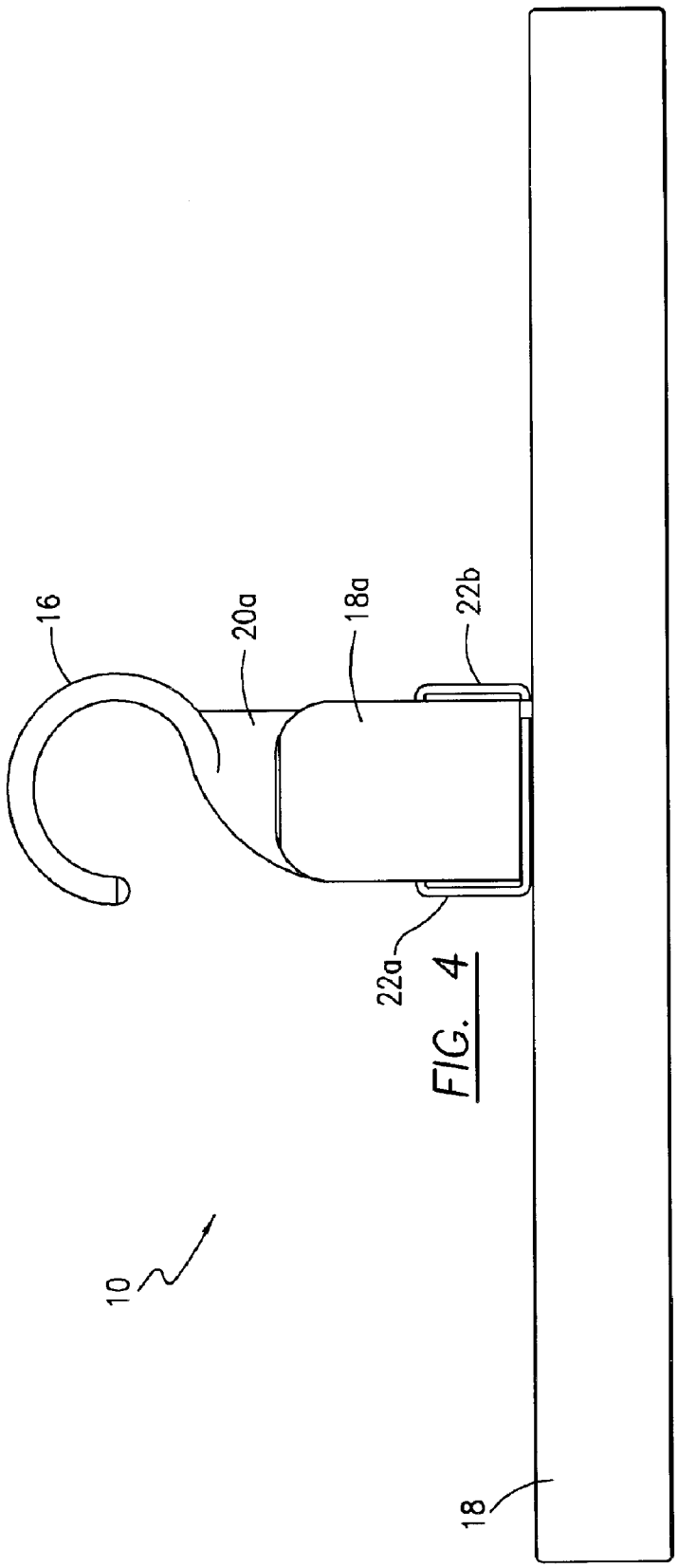
16
20a
18a
22b
22a
18
10

FIG. 4

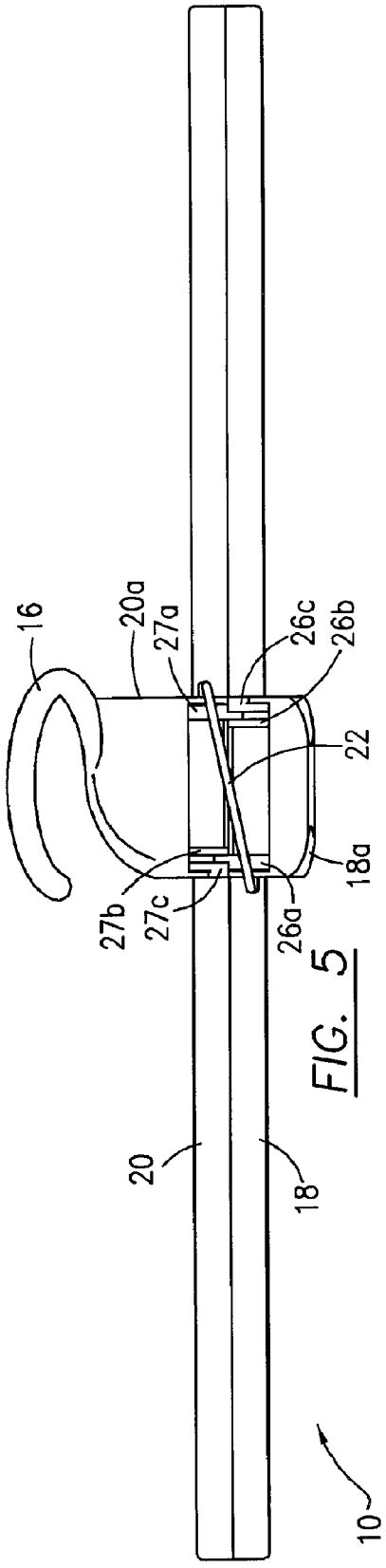
16
20a
27a
26c
26b
22
18a
27b
27c
26a
20
18
10

FIG. 5

CLOTHING HANGER

FIELD OF THE INVENTION

[0001] This invention relates generally to a clothing hanger for suspending a shirt by its waist in a closet to prevent wrinkling and, specifically, to a clothing hanger specifically designed for a t-shirt or other shirt garment that can be used to suspend the shirt in a closet to prevent distortion and wrinkling of the shirt prior to use.

DESCRIPTION OF RELATED ART

[0002] In recent years, the t-shirt has become a standard staple in the wardrobe of all segments of the population. Typically, the t-shirt is an upper torso garment having short sleeves and an open neck with no collar. T-shirts and various other shirt garments, due to the nature of their design and the materials from which they are constructed, are easily wrinkled and develop distortions in their shape during storage.

[0003] One of the problems in storing t-shirts and other shirt garments when not in use in drawers or closets is that the shirts tend to wrinkle if not folded properly or get distorted in shape when hung from conventional hangers. Often the necks of the shirts are stretched while trying to get the hanger inside the t-shirt causing a distortion in the garment. If the shirt is not properly centered on the hanger, this can also result in wrinkles or distortion along the collar line and neck of the shirt. If shirts are folded and stored in drawers, they can develop creases and wrinkles along the fold line and are easily wrinkled in the drawer. U.S. Pat. No. 5,397,037, issued to Ozawa on Mar. 14, 1995, shows a dress hanger that can be collapsed to allow for insertion into the narrow neck portion of a shirt. While this device will certainly alleviate stretching of the neck member, it adds a level of complexity and increased cost just for the manufacture of a single shirt hanger. Furthermore, distortions along the collarbone area of the shirt may still occur if the shirt is not hanging symmetrically. U.S. Pat. No. 6,345,742, issued to Sugita on Feb. 12, 2002, shows a suit hanger that is also suitable for use with a t-shirt or other shirt garment when the hanger is inserted. Again, the level of complexity is high and cost increased for hanging a single shirt garment. Also, the '742 invention could cause distortion along the shoulder blade areas of the shirt if the shirt is not symmetrically disposed on the hanger.

[0004] Another approach is to suspend the garment from a plurality of projection or fingers mounted along the bar of the hanger. U.S. Pat. No. 5,967,388, issued to Kolton et al., on Oct. 19, 1999, shows a garment hanger that includes a succession of garment support elements that project downwardly. The drawback of this type of hanger for supporting a shirt is that each of the elements applies pressure points that can cause distortions or wrinkles in the garment while other segments of the garment are not in contact with the support members. The present invention overcomes the common problems, as shown in the prior art, of distortion and wrinkling when storing t-shirts.

SUMMARY OF THE INVENTION

[0005] The applicant's invention is for a clothing hanger for use in a closet to prevent wrinkles and distortion of shirts. The hanger comprises a rigid, horizontal first clamp member, a rigid horizontal second clamp member having an attached C-shaped hook, and a spring for engaging both clamp members and for providing the force to clamp and support the waist portion of a shirt across the entire width of the clamp members. Each clamp member includes a centrally-positioned, manually actuated tab attached to a top portion of said clamp member to be grasped by the fingers or hand of a user to open said clamp members for receiving the shirt to be suspended and stored. The C-shaped hook of the second clamp member is centrally positioned and connected to the top of the manually actuated tab of said second clamp member. The manually actuated tabs of the first and said second clamp members are oriented at an angle away from normal (90°) so that said tabs can be manually squeezed or pressed together to open and close said garment clamp. The clamp members are sized in length to be approximately the width of a t-shirt garment.

[0006] The first and second clamp members are pivotally connected together and spring-loaded in a closed position so that the clamp members form two flat elongated surfaces that engage the base of a shirt uniformly to prevent any distortions or wrinkles in the shirt. The manual actuating tabs of each clamp member protrude above the first and second clamp members, and said manual actuating tabs can be squeezed together against spring tension to open the clamp manually for insertion of the shirt. The C-shaped hook is sized to be hung on a horizontal support found in closets.

[0007] To use the invention, a shirt, once it has been ironed, would be grasped by the lower or waist portion and held up against the first and second clamp members extending across the hanger from one end to the other. Said first and second clamp members are then opened and the shirt is inserted along the waist portion until said shirt is uniformly and evenly distributed along the entire length of the clamp members. The activating clamp members are then released allowing the garment clamp arms to engage the shirt uniformly along its waist portion.

[0008] An object of this invention is to provide an improved clothing hanger, especially for a t-shirt, to prevent wrinkling or distortion of the shirt garment during storage in a closet.

[0009] Yet another object of this invention is to provide a clothing hanger that has sufficiently wide garment clamp members to prevent distortion and wrinkles in a shirt garment when said shirt is suspended from the waist portion of said shirt.

[0010] Still another object of this invention is to provide an improved clothing hanger for shirts, and especially for t-shirts, to alleviate neck distortion that allows the shirt to be suspended from the waist portion by a wide garment clamp in the storage position.

[0011] In accordance with these and other objects which will become apparent hereinafter, the instant invention will now be described with particular reference to the accompanying drawings.

BRIEF DESCRIPTION OF THE DRAWINGS

[0012] FIG. **1** is a perspective view of the present invention that includes a partially shown portion of a t-shirt.

[0013] FIG. **2** shows a side elevational view of the present invention including a portion of a t-shirt.

[0014] FIG. **3** shows an enlarged side elevational view of the grip protrusions located on the rear surface of each clamp member.

[0015] FIG. **4** shows a front elevational view of the present invention

[0016] FIG. **5** shows a top view of the present invention.

DETAILED DESCRIPTION

[0017] FIG. **1** illustrates a clothing hanger **10** for preventing wrinkles and distortions of a shirt **12**, and especially a t-shirt **12**, by engaging a waist portion of said shirt, which is not a part of this invention. Although the clothing hanger **10** is particularly useful for storing t-shirts **12** to prevent wrinkles, the hanger **10** may also be used to hang and store various other types of shirts **12** and clothing garments, including, but not limited to, polo shirts, tank tops, sweaters, and sweatshirts, as well as ladies delicates and even short pants.

[0018] The clothing hanger **10** comprises a garment clamp **14** and a hook **16** for hanging from a horizontal support inside a closet. The garment clamp **14** is comprised of a first clamp member **18**, a second clamp member **20**, and a spring **22** for pivotally engaging said first clamp member **18** and said second clamp member **20** to support a waist portion of a shirt **12** entirely across the base of the hanger **10**. The flat, planar horizontal first clamp member **18** has a manually actuated tab **18***a* located centrally on a top surface of said first clamp member **18**. Said flat, planar horizontal second clamp member **20** also has a manually actuated tab **20***a* located centrally on a top surface of the second clamp member **20**. The thin rigid, tubular hook **16** is attached in the center of the top of the tab **20***a* of the second clamp member **20**. Said second clamp member **20** and said hook **16** comprise a single-piece unit, said hook **16** being attached to and protruding above the manually actuated tab **20***a* of said second clamp member **20**. The garment clamp **14** and hook **16** are manufactured preferably from plastic. Said hook **16** and said second clamp member **20** preferably form one molded plastic piece. The second clamp member **20** further includes a centrally-located small hook **30** for engaging another clothing hanger **10** so as to provide the ability to vertically connect multiple hangers, thereby conserving storage space within the closet.

[0019] The hook **16** of said clothing hanger **10** is sized and shaped to hang on a horizontal support found in closets. Said hook **16** is preferably C-shaped, and is angled so that the hook **16** is coplanar with the manually actuated tab **20***a* of said second clamp member **20**. The first and second clamp members **18** and **20** of said clothing hanger **10** are pivotally connected together and spring-loaded in a closed position so that said clamp members **18**, **20** form two flat, elongated surfaces for engaging the waist portion of the shirt **12** uniformly to prevent any distortions or wrinkles in said shirt. The manually actuated tabs **18***a* and **20***a* of said first and said second clamp members **18** and **20** are oriented at an angle away from normal (90°) so that said tabs **18***a*, **20***a* can be manually squeezed or pressed together to open and close said garment clamp **14**. Said manually actuated tabs **18***a* and **20***a* of said first and second clamp members **18** and **20** are connected to and protrude above the clamp members **18**, **20** and can be squeezed together against spring tension to open the clamp members **18**, **20** manually for insertion of the shirt **12**. Both the first and second clamp members **18** and **20** are sized in length to be approximately the width of a t-shirt garment **12**, although said clamp members **18**, **20** may be manufactured in various sizes. Preferably, both the first and second clamp members **18** and **20** are at least **16** inches in length. As illustrated in FIGS. **2** and **3**, said first and second clamp members **18** and **20** each include a textured gripping surface or gripping protrusion **24** at the bottom of the rear surface of each clamping member **18**, **20** to provide stronger engagement for a suspended shirt **12** with the hanger **10**.

[0020] The spring **22**, shown in FIGS. **2**, **4**, and **5**, is a rigid, folded metal wire having two opposing L-shaped sections **22***a* and **22***b* oriented at an angle away from one another and connected by a horizontal section **22***c* of said wire that is also oriented at angle in a horizontal plane. The L-shaped sections **22***a*, **22***b* of said spring **22** terminate in opposing directions. Said L-shaped sections **22***a*, **22***b* of the spring **22** engage the first and second clamp members **18** and **20** of said spring at the point of connection between said clamp members **18**, **20** and the respective manually actuated tab **18***a* and **20***a* of each clamp member. By manually pressing or squeezing together said manually actuated tabs **18***a* and **20***a*, said L-shaped sections **22***a*, **22***b* of said spring **22** are forced outward, thereby decreasing the tension exerted by the spring **22** on the clamp members **18**, **20** to permit the garment clamp **14** to be opened for inserting or removing a shirt **12** from the hanger **10**. Said spring **22** is constructed from a metal or alloy that includes the property of shape memory or retention. Thus, when the manually actuated tabs **18***a*, **20***a* of said clamp members **18**, **20** are released, the spring **22** recoils to regain the original closed configuration of said spring **22**, thereby re-exerting pressure on the clamp members **18** and **20** and closing said garment clamp **14**. Although the L-shaped sections **22***a* and **22***b* of the spring **22** are identical in shape, because they differ in position and orientation, FIG. **4** shows L-shaped section **22***a* engaging the first clamp member **18** and L-shaped section **22***b* engaging the second clamp member **20**.

[0021] As shown in FIGS. **1**, **2**, and **5**, said first clamp member **18** and said second clamp member **20** each include protrusions or flanges, **26***a*, **26***b*, **26***c*, **27***a*, **27***b*, and **27***c*, attached to the rear surfaces of the manually actuated tabs **18***a* and **20***a*, said protrusions or flanges providing a pivot point for allowing said tabs to be squeezed together by a user to open the spring-loaded garment clamp **14**. Protrusions **26***b* and **26***c* attached to the first clamp member **18** rest upon protrusion **27***a*, which is attached to the second clamp member **20**, thereby aiding the creation of the pivot point for said clamp members **18** and **20**. Protrusions **27***b* and **27***c* attached to the second clamp member **20** rest upon protrusion **26***a*, which is attached to the first clamp member **18**, thereby completing the pivot point necessary for the clamp members **18** and **20** and the spring **22**. Preferably, protrusions **26***b*, **26***c*, **27***b*, and **27***c* each contain identical arcuate recesses at one end for receiving the complementary rounded end of protrusions **26***a* and **27***a*, thereby providing a more effective pivot point for said clamp members **18** and **20**.

[0022] In addition to hanging t-shirts **12** and other lightweight shirt garments, the clothing hanger **10** can also be

used to hang and support sweaters and sweatshirts to prevent wrinkling, and therefore, the first and second clamp members **18** and **20** of said hanger **10** must be sufficiently sturdy and have a sufficient spring tension to hold and suspend a sweater or sweatshirt attached along the waist portion of said garment. Additionally, said clothing hanger **10** may also be used to hang wet clothing while said clothing dries.

[**0023**] In an alternate embodiment, said first clamp member **18** and said second clamp member **20** may each include a centrally-located aperture for receiving the insertion of another t-shirt hanger **10** for providing the ability to vertically connect multiple hangers, thereby conserving storage space within the closet. This aperture (not shown in the drawings) can be used in place of the small hook **30** shown in FIG. **2**.

[**0024**] The invention also describes a method for suspending a shirt **12** by a waist portion of said shirt to prevent wrinkles and distortion of the shirt. This method comprises the steps of holding a waist portion of the shirt **12**, once it has been ironed, against the first and second spring-loaded clamp members **18** and **20**, which form the garment clamp **14**. The user must then squeeze the manual actuator tabs **18***a*, **20***a* of each clamp member **18**, **20** to open said garment clamp **14**. The waist portion of the shirt **12** is inserted between said first and second clamp members **18** and **20** of the garment clamp **14** until said waist portion is uniformly and evenly distributed along the garment clamp throughout the entire length of said garment clamp. Finally, the manual actuator tabs **18***a*, **20***a* are released to allow the clamp members **18** and **20** to engage the shirt **12** uniformly along its waist portion through the spring tension exerted by the spring **22** on each of the clamp members **18**, **20**. Said shirt **12** can be suspended in a closet by engaging the hook **16** connected to the manual actuator tab **20***a* on said second clamp member **20** with a horizontal support in said closet.

[**0025**] The instant invention has been shown and described herein in what is considered to be the most practical and preferred embodiment. The applicant recognizes, however, that departures may be made therefrom within the scope of the invention and that obvious modifications will occur to a person skilled in the art.

What is claimed is:

1. A clothing hanger for use in a closet to prevent wrinkles and distortion of a t-shirt or other shirt garment, comprising:

a garment clamp that includes:

a flat, planar horizontal first clamp member having a manually actuated tab located centrally on a top surface of said first clamp member;

a flat, planar horizontal second clamp member having a manually actuated tab located centrally on a top surface of said second clamp member; and

a spring for pivotally engaging said first clamp member and said second clamp member for supporting a waist portion of a t-shirt entirely across the base of the hanger; and

a thin rigid, tubular hook centrally attached to the top of the tab of the second clamp member.

2. The clothing hanger of claim 1, wherein said second clamp member and said hook comprise a single-piece unit, said hook being attached to and protruding above the manually actuated tab of said second clamp member.

3. The clothing hanger of claim 1, wherein the hook is sized and shaped to hang on a horizontal support found in closets.

4. The clothing hanger of claim 1, wherein the hook is preferably C-shaped.

5. The clothing hanger of claim 1, wherein the manually actuated tabs of said first and said second clamp members are oriented at an angle away from normal so that said tabs can be manually squeezed or pressed together to open and close said garment clamp.

6. The clothing hanger of claim 1, wherein the first and second clamp members are pivotally connected together and spring-loaded in a closed position so that said clamp members form two flat, elongated surfaces for engaging the waist portion of the t-shirt uniformly to prevent any distortions or wrinkles in the t-shirt.

7. The clothing hanger of claim 1, wherein the manually actuated tabs of said first and second clamp members are connected to and protrude above the clamp members and can be squeezed together against spring tension to open the clamp members manually for insertion of the shirt.

8. The clothing hanger of claim 1, wherein the first and second clamp members are sized in length to be approximately the width of a t-shirt garment, although said clamp members may be manufactured in various sizes.

9. The clothing hanger of claim 1, wherein, in addition to hanging and storing said t-shirt to prevent wrinkles of said t-shirt, said clothing hanger can also be used to hang and store various other types of shirts and clothing garments, including, but not limited to, polo shirts, tank tops, sweaters, and sweatshirts, as well as ladies delicates and short pants.

10. The clothing hanger of claim 1, wherein said first and second clamp members each include a textured gripping surface or gripping protrusion at the bottom of the rear surface of each clamping member to provide stronger engagement for a suspended shirt with the hanger.

11. The clothing hanger of claim 1, wherein said first clamp member and said second clamp member each include protrusions or flanges attached to the rear surfaces of the manually actuated tabs, said protrusions or flanges providing a pivot point for allowing said tabs to be squeezed together by a user to open the spring-loaded garment clamp.

12. The clothing hanger of claim 11, wherein each clamp member preferably includes two or more protrusions each of which contains an arcuate recess at one end for receiving the complementary rounded end of opposing protrusions located on the opposing clamp member, thereby providing a more effective pivot point for said clamp members.

13. The clothing hanger of claim 1, wherein said second clamp member includes a centrally-located small hook for engaging another clothing hanger so as to provide the ability to vertically connect multiple clothing hangers, thereby conserving storage space within the closet.

14. The clothing hanger of claim 1, wherein said spring comprises:

a rigid, folded metal wire having two opposing L-shaped sections connected by a horizontal section of said wire that is also oriented at angle in a horizontal plane, said L-shaped sections of the spring being oriented vertically at an angle away from one another beginning at the point of connection between each L-shaped section of wire and the horizontal section of wire; and

wherein the L-shaped sections of said spring terminate in opposing directions.

15. The clothing hanger of claim 14, wherein said L-shaped sections of the spring engage the first and second clamp members of said spring at the point of connection between said clamp members and the respective manually actuated tab of each clamp member.

16. The clothing hanger of claim 15, wherein said manually actuated tabs of the garment clamp can be squeezed or pressed together to force the L-shaped sections of said spring outward, thereby decreasing the tension exerted by the spring on the clamp members to allow said garment clamp to be opened for inserting or removing a shirt from the hanger.

17. The clothing hanger of claim 16, wherein said spring is constructed from a metal or alloy that includes the property of shape memory or retention so that when the manually actuated tabs of said clamp members are released, the spring recoils to regain the original closed configuration of said spring, thereby re-exerting pressure on the clamp members and closing said garment clamp.

18. The clothing hanger of claim 1, wherein said hanger can also be used to hang and support sweaters to prevent wrinkling, such that the first and second clamp members should be sufficiently sturdy and have a sufficient spring tension to hold and suspend a sweater attached along the waist portion of said sweater.

19. A method for suspending a t-shirt or other shirt garment by a waist portion of said shirt to prevent wrinkles and distortion of the shirt, comprising the steps of:

holding a waist portion of the shirt, once it has been ironed, against first and second spring-loaded clamp members forming a garment clamp;

squeezing one or more manual actuators to open said garment clamp;

inserting the waist portion of the shirt between said first and second clamp members of the garment clamp until said waist portion is uniformly and evenly distributed along the garment clamp throughout the entire length of said garment clamp;

releasing the manual actuators to allow the garment clamp members to engage the shirt uniformly along its waist portion; and

suspending said shirt in a closet by engaging a hook connected to a rear surface of the manual actuator tab on said second clamp member with a horizontal support in said closet.

20. A means for hanging a t-shirt or other shirt garment in a closet to prevent wrinkles and distortion of the shirt, comprising:

means for clamping a waist portion of a shirt across approximately the entire width of said waist of said shirt so that said shirt is suspended from said means for clamping, thereby holding the shirt waist in a slightly stretched position to prevent wrinkles and distortions;

means for opening and closing said means for clamping the shirt; and

means for suspending said means for clamping a shirt from a horizontal support in a closet.

* * * * *