(12) INTERNATIONAL APPLICATION PUBLISHED UNDER THE PATENT COOPERATION TREATY (PCT)

(19) World Intellectual Property Organization
International Bureau

(43) International Publication Date
02 November 2017 (02.11.2017)

WIPO | PCT

(10) International Publication Number
WO 2017/189110 A1

(51) International Patent Classification:
E21B 34/10 (2006.01) *F16K 31/122* (2006.01)
F16K 17/04 (2006.01)

(21) International Application Number:
PCT/US2017/022122

(22) International Filing Date:
13 March 2017 (13.03.2017)

(25) Filing Language: English

(26) Publication Language: English

(30) Priority Data:
15/070,196 15 March 2016 (15.03.2016) US

(71) Applicant: **BAKER HUGHES INCORPORATED** [US/US]; 17021 Aldine Westfield, Houston, TX 77073 (US).

(72) Inventors: **JONES, Brett, C.**; 1800 W. Albany Dr., No. 1331, Broken Arrow, OK 74012 (US). **BURRIS, John, E.**; 9030 E. 136th Pl. S., Bixby, OK 74008 (US).

(74) Agent: **DUPHORNE, Darin, H.**; Intellectual Property Counsel, Baker Hughes Incorporated, 17021 Aldine Westfiled, Houston, TX 77073 (US).

(81) Designated States *(unless otherwise indicated, for every kind of national protection available)*: AE, AG, AL, AM, AO, AT, AU, AZ, BA, BB, BG, BH, BN, BR, BW, BY, BZ, CA, CH, CL, CN, CO, CR, CU, CZ, DE, DJ, DK, DM, DO, DZ, EC, EE, EG, ES, FI, GB, GD, GE, GH, GM, GT, HN, HR, HU, ID, IL, IN, IR, IS, JP, KE, KG, KH, KN, KP, KR, KW, KZ, LA, LC, LK, LR, LS, LU, LY, MA, MD, ME, MG, MK, MN, MW, MX, MY, MZ, NA, NG, NI, NO, NZ, OM, PA, PE, PG, PH, PL, PT, QA, RO, RS, RU, RW, SA, SC, SD, SE, SG, SK, SL, SM, ST, SV, SY, TH, TJ, TM, TN, TR, TT, TZ, UA, UG, US, UZ, VC, VN, ZA, ZM, ZW.

(84) Designated States *(unless otherwise indicated, for every kind of regional protection available)*: ARIPO (BW, GH, GM, KE, LR, LS, MW, MZ, NA, RW, SD, SL, ST, SZ, TZ, UG, ZM, ZW), Eurasian (AM, AZ, BY, KG, KZ, RU, TJ, TM), European (AL, AT, BE, BG, CH, CY, CZ, DE, DK, EE, ES, FI, FR, GB, GR, HR, HU, IE, IS, IT, LT, LU, LV, MC, MK, MT, NL, NO, PL, PT, RO, RS, SE, SI, SK, SM, TR), OAPI (BF, BJ, CF, CG, CI, CM, GA, GN, GQ, GW, KM, ML, MR, NE, SN, TD, TG).

Published:
— *with international search report (Art. 21(3))*

(54) Title: BALANCE LINE CONTROL SYSTEM WITH RESET FEATURE FOR FLOATING PISTON

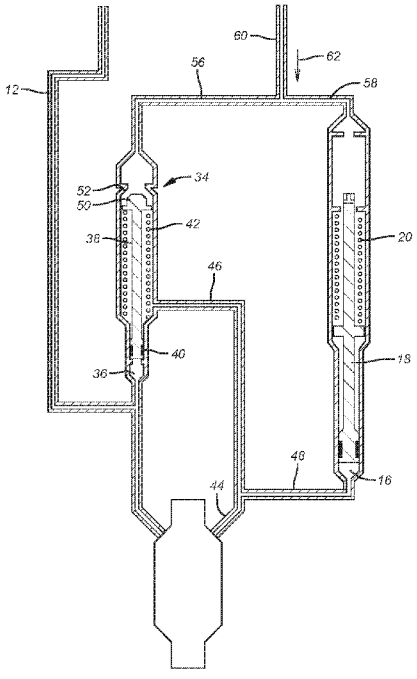

FIG. 3

(57) Abstract: An operating control line is in communication with an operating piston for the safety valve as well as an equalizing piston such that pressure in the operating control line opens the safety valve and holds the equalizer valve closed. A balance chamber receives fluid from an operating piston in the safety valve when the valve opens to displace a floating piston to the open position. Operating control line pressure reduction allows valve closure and opposite floating piston movement to the closed position. If the floating piston is forced by a tubing seal leak against the open position travel stop, pressure in a balance control line against the equalizing valve member moves it from a seat to then equalize pressure on opposed ends of the floating piston allowing a bias force to move the floating piston off the open position stop so the safety valve can open despite the tubing leak.

WO 2017/189110 A1

BALANCE LINE CONTROL SYSTEM WITH RESET FEATURE FOR FLOATING PISTON

FIELD OF THE INVENTION

[0001] The field of the invention is hydraulic control systems for borehole tools and more particularly systems that employ a control line and a balance line to the surface with a floating piston isolating a balance chamber. In the event leakage of tubing pressure prevents downward movement of the floating piston on safety valve closure, a pressure equalization enabled by applied pressure on the balance line allows reset of the floating piston to allow continued operation of the safety valve despite the tubing pressure leak.

BACKGROUND OF THE INVENTION

[0002] Subsurface safety valves are typically hydraulically controlled from a remote location using one or two control lines. An advantage of a two control line system is that hydrostatic pressure in each line is canceled out so that a closure spring for a flow tube does not need to resist hydrostatic pressure as is the case with single control line systems. In two line control systems pressure on top of an operating piston moves a flow tube against a flapper to open the valve. Removal of such pressure from the main control line allows a closure spring to reverse movement of the flow tube to allow the flapper to rotate 90 degrees to closed position of the safety valve. In the past operators have wanted or regulations required a barrier in the second or balance control line so that if tubing pressure leaks into the hydraulic system there would be a barrier to keep hydrocarbons from reaching a surface location through the balance line.

[0003] The floating piston in the balance line served this purpose as a barrier. In normal valve operations pressure applied in the main control line to the top of a piston whose movement shifted the flow tube would result in hydraulic fluid displacement to the underside of the floating piston. Conversely, as pressure was removed from the main control line and the closure spring pushed up the flow tube hydraulic fluid would be drawn into the safety valve from under the floating piston to enable the safety valve to close. The floating piston would just move up when the safety valve open and reverse its motion when the safety valve closed, each time displacing an equal

volume of hydraulic fluid as movement of the operating piston had displaced. The floating piston was sometimes biased toward the down position to put it in the ready position for safety valve opening.

[0004] Sometimes, seals could leak in such safety valve hydraulic systems such that the much higher tubing pressure could leak into the balance control line and against the underside of the floating piston. This could happen slowly taking months or even years to reach an extreme condition where the floating piston would be up against an upper travel stop with tubing pressure under it. As a result the safety would not be functional to open since the operating piston in the safety valve could not displace hydraulic fluid because the floating piston could not move because it was forced against an upward travel stop due to tubing pressure leaking past a seal. When this happened in the past the safety valve would need to be removed, which caused very expensive downtime.

[0005] The present invention is a reconfiguration of the two control line system that incorporates the floating piston working normally the same way as it worked in the past. What is different is the addition of an operable one way valve that can be opened with pressure applied to the balance line such that when such equalizing valve was forced open from the balance line applied pressure, the pressure on opposed sides of the floating piston could equalize and the position of the floating piston could change. The floating piston, now placed in pressure balance on its opposed ends could be biased away from its upper travel stop. Doing this would again make the safety valve operable to open as the hydraulic system would no longer be liquid locked by virtue of the floating piston sitting against its upper travel stop under tubing pressure. In essence the balance line pressure would be raised to the level of the tubing pressure or less depending on seal geometries to get the equalizer valve to open to allow a return spring acting on the floating piston to bias it back to a lower travel stop to allow reopening of the valve without well shutdown and safety valve removal. Many times the seal leakage is so slow that the ability to reposition the floating piston can allow many more years of service for the safety valve. These and other aspects of the present invention will be more readily apparent to those skilled in the art from a review of the description of

the preferred embodiment and the associated drawings while recognizing that the full scope of the invention is to be determined from the appended claims.

The following references are illustrative of control systems used in the past for safety valves in a borehole application: US 5906220; US 7743833; US 8534317 and US 2008/0314599.

SUMMARY OF THE INVENTION

[0006] An operating control line is in communication with an operating piston for the safety valve as well as an equalizing piston such that pressure in the operating control line opens the safety valve and holds the equalizer valve closed. A balance chamber receives fluid from an operating piston in the safety valve when the valve opens to displace a floating piston to the open position. Operating control line pressure reduction allows valve closure and opposite floating piston movement to the closed position. If the floating piston is forced by a tubing seal leak against the open position travel stop, pressure in a balance control line against the equalizing valve member moves it from a seat to then equalize pressure on opposed ends of the floating piston allowing a bias force to move the floating piston off the open position stop so the safety valve can open despite the tubing leak.

BRIEF DESCRIPTION OF THE DRAWINGS

[0007] FIG. 1 is a schematic of the present invention showing the safety valve closed or pressure reduced in the balance chamber;

[0008] FIG. 2 is the view of FIG. 1 with the safety valve open or the balance chamber gaining pressure;

[0009] FIG. 3 shows pressure applied into the balance line opening the equalizing valve and allowing the bias on the floating piston to reposition the floating piston such that the safety valve can be opened.

DETAILED DESCRIPTION OF THE PREFERRED EMBODIMENT

[0010] Referring to FIG. 1, the normal operation of the control system **10** will be described. An operating control line **12** extends from a remote location to a subsurface safety valve **14** located in a borehole or conduits associated with a borehole that are not shown. The safety valve **14** is a type well known in the art and generally has a hydraulic piston moving a flow tube to rotate a flapper to open the valve when pressure is applied to the operating control line **12**. When pressure is removed from operating control line **12** a closure spring

is able to push the flow tube away from the flapper to let the flapper rotate 90 degrees to a closed position against a flapper seat. Moving the flow tube requires delivery of hydraulic fluid against an operating piston in the safety valve **14**. Movement of such a piston displaces fluid out of the safety valve body to a balance chamber **16** that is directly below the floating piston **18**. Floating piston **18** is biased by spring **20** pushing from support **22** against shoulder **24** on the floating piston **18**. Taper **26** represents a lower travel stop for the floating piston **18**. Support **22** surrounds the floating piston **18** and guides its movement up to upper stop **28**. The piston **18** does not necessarily have to reach the stop **28** as its upper movement can be limited by fully compressing spring **20** between shoulder **24** and support **22** or limited by maximum fluid displacement from valve **14**.

[0011] Operating control line **12** branches into lines **30** and **32**. Line **32** goes to the top of the operating piston inside the safety valve **14** and line **30** goes to the underside of equalizing valve **34** at inlet **36** below the valve member **38** that has a seal **40** to hold the pressure in the operating control line **12**. Coming out of the safety valve **14** from below the operating piston of the safety valve **14** is line **44** that branches into lines **46** and **48**. Line **46** goes into an annular space where spring **42** is located. Spring **42** pushes up on valve member **38** to hold head **50** against seat **52**. Pressure in line **46** acts below head **50** also acts in the same direction as spring **42**. Note that the seal area at seat **52** is larger than the seal **40** so that pressure in line **46** creates a net force on head **50** against seat **52**. Stop **54** limits the movement of head **50** away from seat **52**. Lines **56** and **58** join to become the balance line **60** that goes to a remote surface location. As previously stated the purpose of line **60** is to offset the hydrostatic pressure in operating control line **12** but it has another purpose as will be described.

[0012] Valve member **38** does not move during normal operation of the safety valve **14**. Floating piston **18** is in a lower position shown in FIG. 1 when the safety valve **14** is closed. To open the safety valve **14** the pressure in operating control line is raised. This opens the safety valve as described above and displaces hydraulic fluid into lines **44** and **48** causing the floating piston **18** to move up as shown in FIG. 2. Note that the volume of chamber **16** has increased in FIG. 2 as compared to FIG. 1. When this happens there is no flow

in line **46** because the head **50** is against seat **52**. Upward movement of the floating piston **18** displaces fluid into lines **58** and **60**. There is no flow in line **56** as the path of least resistance is into the balance line **60**. This is because when the pressure is raised in operating control line **12** it is also applied at **36** to push up on the equalizing valve member **38** and displaced fluid from valve **14** through lines **44** and **46** adds to the force to hold the head **50** against the seat **52**.

[0013] As FIG. 1 shows the floating piston **18** needs to be in the down position so that the valve **14** can go from closed as shown in FIG. 1 to open as shown in FIG. 2. This is because the movement of the operating piston in the valve **14** displaces hydraulic fluid into lines **44** and **48** in response to raised pressure in line **12** that is used to open the valve **14**. If for any reason the floating piston **18** is in the FIG. 2 position when the valve **14** is trying to open, then the valve **14** will be liquid locked as the floating piston **18** cannot be displaced toward stop **28** because it is already there. One way this situation can happen is when tubing pressure inside valve **14** from the tubing string that is not shown and to which it is connected finds a leak path around a seal for the hydraulic system. The tubing pressure can often times be substantially higher than the operating hydraulic pressure. The hydraulic pressure at valve **14** typically reflects the hydrostatic at the location of valve **14** and the pressure needed to overcome seal friction and the force of the closure spring when the valve is in the open position. Tubing pressure can be significantly higher. Since the seals in the valve **14** hydraulic system are fairly small it is possible that leakage around such seals can be at such a slow rate that it could take months or even years to get the floating piston **18** displaced to the FIG. 2 position with such leaked tubing pressure such that the valve **14** can only be closed if it was open but cannot thereafter be reopened.

[0014] FIG. 3 illustrates a workaround for this situation while still providing a seal in the balance line **60** against hydrocarbons getting to a surface location and the dangers that can ensue if that happens. Thus, when raising pressure at operating control line **12** fails to open the valve **14** because the floating piston **18** is forced by leaking tubing pressure into line **48** and balance chamber **16**, the pressure in operating control line **12** is turned off. Instead the pressure is applied in the balance line **60** in the direction of arrow

62. It should be noted that during normal operation no pressure is applied to balance line **60**. However, when valve **14** refuses to open with pressure in operating control line **12**, then the extraordinary measure of pressurizing balance line **60** in the direction of arrow **62** needs to be implemented.

[0015] The pressure under the equalizing valve **34** at inlet **36** is at this time equal to the hydrostatic pressure in operating control line **12** because no pressure is being applied to operating control line **12**. This pressure tends to push the valve member **38** and the head **50** toward seat **52**. Opposing this force is the pressure in balance line **60** communicating with head **50** through line **56**. Since the area of the head **50** is larger than seal there is a net force developed in the direction of moving the head **50** away from seat **52**. As the pressure in balance line **60** in the direction of arrow **62** increases so does the net force on the valve member **38** until the force of spring **42** is overcome and the FIG. 3 position for the valve member **38** is assumed. When this happens, the pressure in lines **60**, **58** and **56** equalizes with lines **46** and **48** with the result that there is no longer a net force acting on the floating piston **18** so that spring **20** can move the floating piston **18** from the FIG. 2 to the FIG. 3 position. After that happens the valve **14** will no longer be liquid locked in the hydraulic system and the operating piston inside the valve **14** can once again move to allow the valve **14** to open. Removal of pressure in balance line **60** will then allow spring **42** to move head **50** back to seat **52** and, if the tubing pressure leak is small enough, the valve **14** can be operated normally for some time until enough leakage reoccurs to again pin the floating piston **18** in the FIG. 2 position so that the valve **14** again fails to open. The above described procedure can then be repeated in the hope of getting some additional service life for valve **14** without having to pull it out of the hole. In essence the equalizer valve **34** is a bypass passage around the floating piston **18** that can be selectively opened from a remote location by pressurizing balance line **60** in the direction of arrow **62** that opens the equalizer valve **34** to allow the spring **20** to then reposition the floating piston **18** to give it room to move up from the FIG. 3 position to facilitate another opening of the valve **14** for further production.

[0016] If the balance chamber **16** loses pressure/volume, the floating piston **18** will move to compensate for that volume loss. If the floating piston

reaches its downward stop **26**, it will not be able to compensate for any additional fluid loss from the balance chamber **16**. If the balance chamber continues to lose pressure, a pressure differential will be created across the equalizer piston **38** causing an opening force on the equalizing piston **38**. This opening force is created by hydrostatic pressures from the balance line **60** and control line **12** acting on the area differential between the larger seal on the head **50** of the equalizing piston **38** and the smaller seal **40** on the equalizing piston **38**. These pressures are normally counter-acted by the pressure of the balance chamber **16** in the annular area around the equalizing piston **38** but differential pressures are formed across the head **50** and seal **40** of the equalizing piston **38** when pressure decreases in the balance chamber **16**. When the balance chamber **16** has lost sufficient pressure to create a sufficient pressure differential to overcome the closing force of the equalizing spring **42** the equalizing piston will shift open and pressure/volume from line **60** will travel through line **56** and refill the lost pressure/volume from the balance chamber **16**.

[0017] Those skilled in the art will appreciate that the equalizer valve **34** is piped up to be in parallel with the end connections on the floating piston **18** such that its opening, however achieved, puts the floating piston in pressure balance in the balance line **60**. At that point the bias of spring **20** repositions the floating piston **18** closer to valve **14** as shown in FIG. 3 so that valve **14** can move to the open position because its operating piston can displace fluid by again moving balance piston **18** against the bias of spring **20**. Connecting the operating control line **12** to under the equalizer piston **38** helps insure contact of head **50** on seat **52** during normal operations. Any applied pressure in operating control line **12** is removed prior to trying to open the equalizer valve **34** using pressure in balance line **60** in the direction of arrow **62**. It should be noted that line **44** is part of the balance line **60** with lines **56** and **46** forming one parallel branch for the equalizer valve **34** and lines **48** and **58** providing a parallel branch for the floating piston **18**.

[0018] The above description is illustrative of the preferred embodiment and many modifications may be made by those skilled in the art without departing from the invention whose scope is to be determined from the literal and equivalent scope of the claims below:

We claim:

1. In a borehole hydraulically operated valve (14) mounted to a tubular string and actuated by an operating piston (14, 32, 44) operatively connected to a hydraulic control system for moving said valve between an open and a closed position, the improvement in said hydraulic control system comprising:

an operating control line (12) communicating to one side (32) of said operating piston (14, 32, 44);

a balance line (44, (60)) communicating to an opposing side of said operating piston (14, 32, 44) and further comprising a floating piston (18) therein; **characterized by**

a selectively opened equalizer valve (34) connected in parallel to said floating piston (18) to enable repositioning of said floating piston (18) should the floating piston (18) be in a position to put said operating piston (14, 32, 44) in a liquid lock condition that prevents said valve from opening.

2. The hydraulic control system of claim **1**, wherein:

said equalizer valve (34) connected to said operating control line (12).

3. The hydraulic control system of claim **1**, wherein:

said equalizer valve (34) operated to open from applied pressure on said balance line.

4. The hydraulic control system of claim **1**, wherein:

said equalizer valve (34) comprising an equalizer piston (38) having a head selectively engageable with a seat.

5. The hydraulic control system of claim **4**, wherein:

said equalizer piston (38) having a seal smaller than said head when engaged to said seat.

6. The hydraulic control system of claim **4**, wherein:

said operating control line (30) in fluid communication with said seal (40) on said equalizer piston (38) to create a force on said head against said seat.

7. The hydraulic control system of claim **6**, further comprising:

an equalizer biasing member (42) acting to force said head against said seat.

8. The hydraulic control system of claim **1**, further comprising:

a floating piston (18) biasing member (20) acting to push said floating piston (18) toward a position assumed when said valve is closed.

9. The hydraulic control system of claim **8**, further comprising:

at least one seal on said floating piston (18).

10. The hydraulic control system of claim **3**, wherein:

said equalizer valve (34) comprising an equalizer piston (38) having a head selectively engageable with a seat.

11. The hydraulic control system of claim **10**, wherein:

said equalizer piston (38) having a seal smaller than said head when engaged to said seat.

12. The hydraulic control system of claim **10**, wherein:

said operating control line (30) in fluid communication with said seal (40) on said equalizer piston (38) to create a force on said head against said seat.

13. The hydraulic control system of claim **12**, further comprising:

an equalizer biasing member (42) acting to force said head against said seat.

14. The hydraulic control system of claim **10**, further comprising:

a floating piston (18) biasing member (20) acting to push said floating piston (18) toward a position assumed when said valve is closed.

15. The hydraulic control system of claim **14**, further comprising:

at least one seal on said floating piston (18).

16. The hydraulic control system of claim **3**, wherein:

said equalizer valve (34) connected to said operating control line (30).

17. The hydraulic control system of claim **1**, wherein:

said selectively opened equalizer valve (34) selectively pressurizing between floating piston (18) and said valve should pressure loss occur therebetween.

18. The hydraulic control system of claim **3**, wherein:

said equalizer valve (34) operated to open from loss of pressure between floating piston (18) and valve.

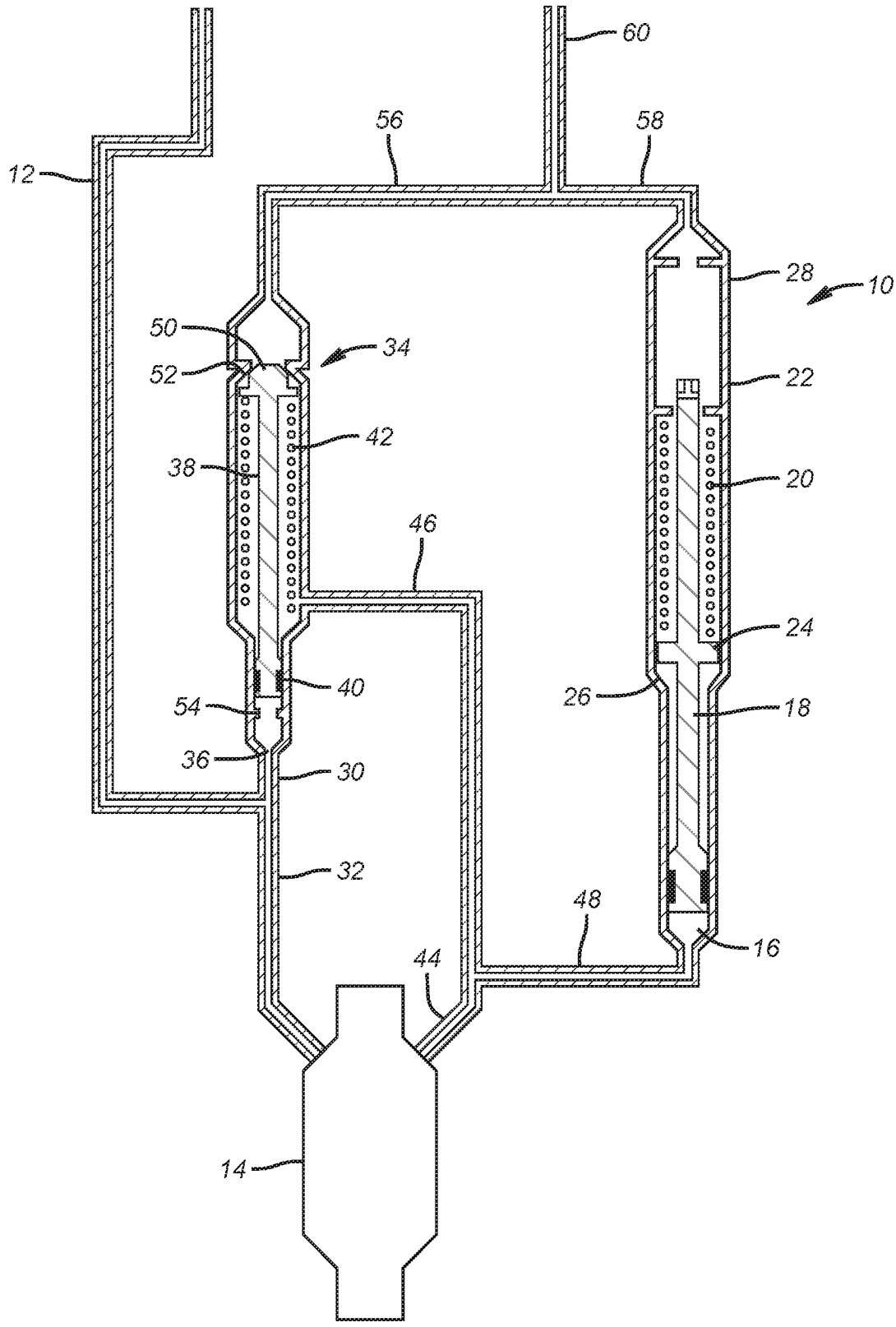
60
56
58
12
28
10
50
34
52
22
42
38
20
46
24
40
26
18
54
36
30
32
48
16
44
14

FIG. 1

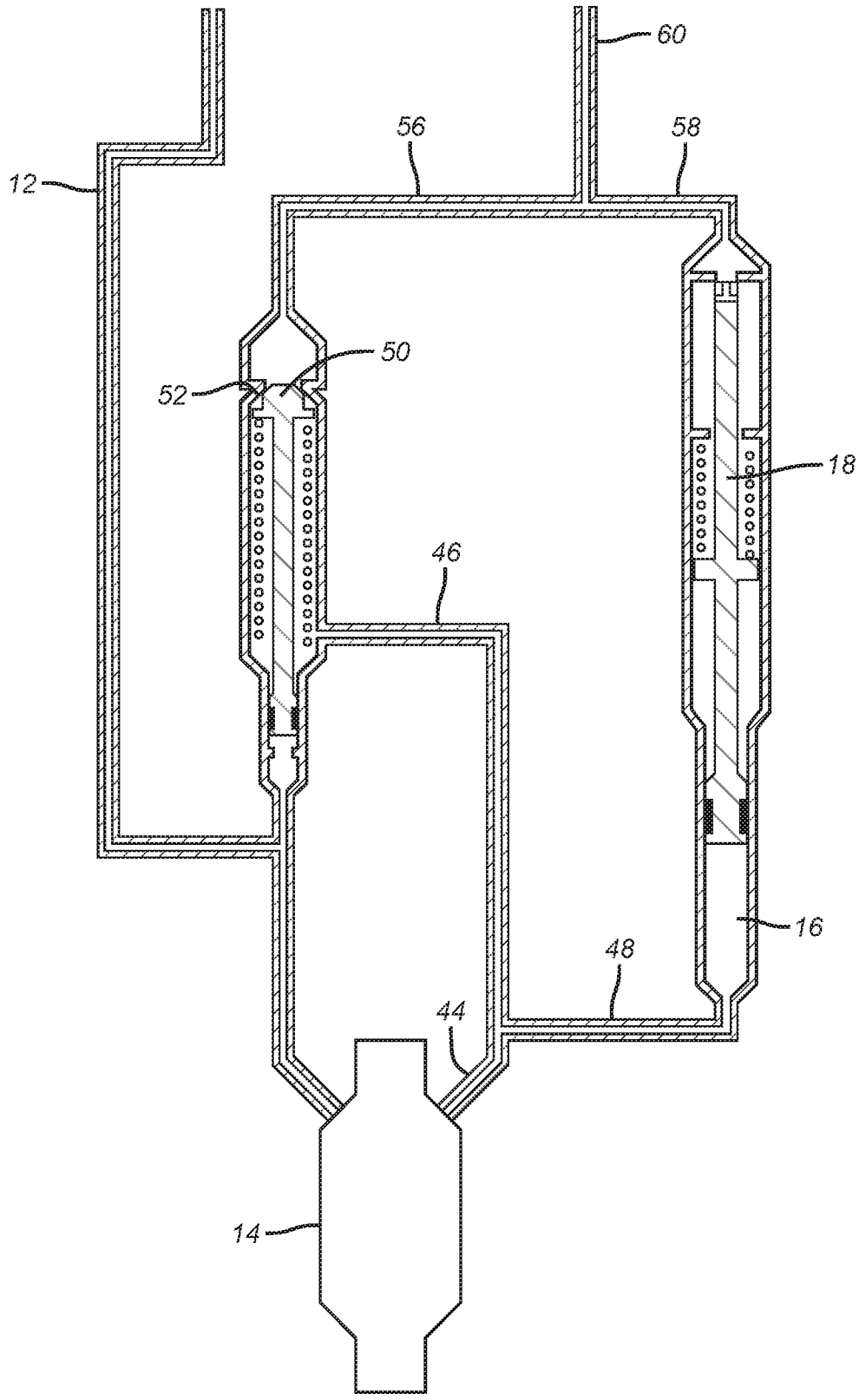

FIG. 2

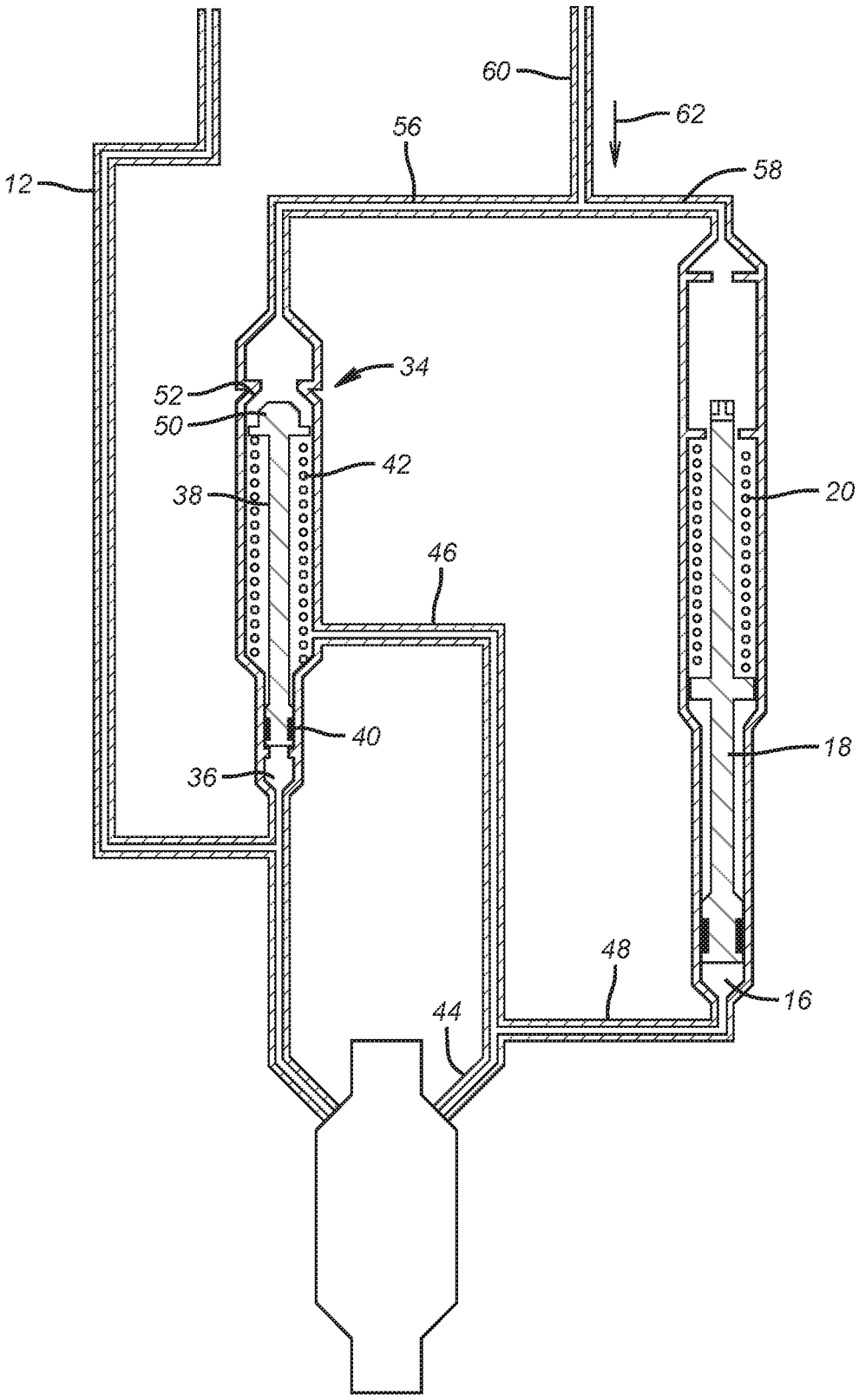

FIG. 3

INTERNATIONAL SEARCH REPORT

International application No.
PCT/US2017/022122

A. CLASSIFICATION OF SUBJECT MATTER

E21B 34/10(2006.01)i, F16K 17/04(2006.01)i, F16K 31/122(2006.01)i

According to International Patent Classification (IPC) or to both national classification and IPC

B. FIELDS SEARCHED

Minimum documentation searched (classification system followed by classification symbols)
E21B 34/10; E21B 33/00; E21B 43/12; E21B 19/00; E21B 23/00; E21B 21/08; F16K 17/04; F16K 31/122

Documentation searched other than minimum documentation to the extent that such documents are included in the fields searched
Korean utility models and applications for utility models
Japanese utility models and applications for utility models

Electronic data base consulted during the international search (name of data base and, where practicable, search terms used)
eKOMPASS(KIPO internal) & keywords: control line, balance line, floating piston, equalizer valve and wellbore

C. DOCUMENTS CONSIDERED TO BE RELEVANT

Category*	Citation of document, with indication, where appropriate, of the relevant passages	Relevant to claim No.
X	US 2003-0168219 A1 (SLOAN, JAMES T.) 11 September 2003 See paragraphs [0013]-[0038] and figures 1-4.	1-18
A	EP 2434090 A2 (WEATHERFORD/LAMB, INC.) 28 March 2012 See paragraphs [0049]-[0060] and figures 3A-3C.	1-18
A	US 2013-0056222 A1 (SMITH et al.) 07 March 2013 See paragraphs [0036]-[0050] and figures 5-8.	1-18
A	EP 0915230 B1 (HALLIBURTON ENERGY SERVICES, INC.) 14 July 2004 See paragraphs [0029]-[0032] and figure 5.	1-18
A	WO 2015-084529 A1 (BAKER HUGHES INCORPORATED) 11 June 2015 See paragraphs [0010]-[0016] and figures 1-3.	1-18

☐ Further documents are listed in the continuation of Box C.

☒ See patent family annex.

* Special categories of cited documents:
"A" document defining the general state of the art which is not considered to be of particular relevance
"E" earlier application or patent but published on or after the international filing date
"L" document which may throw doubts on priority claim(s) or which is cited to establish the publication date of another citation or other special reason (as specified)
"O" document referring to an oral disclosure, use, exhibition or other means
"P" document published prior to the international filing date but later than the priority date claimed
"T" later document published after the international filing date or priority date and not in conflict with the application but cited to understand the principle or theory underlying the invention
"X" document of particular relevance; the claimed invention cannot be considered novel or cannot be considered to involve an inventive step when the document is taken alone
"Y" document of particular relevance; the claimed invention cannot be considered to involve an inventive step when the document is combined with one or more other such documents,such combination being obvious to a person skilled in the art
"&" document member of the same patent family

Date of the actual completion of the international search	Date of mailing of the international search report
10 May 2017 (10.05.2017)	**10 May 2017 (10.05.2017)**

Name and mailing address of the ISA/KR
International Application Division
Korean Intellectual Property Office
189 Cheongsa-ro, Seo-gu, Daejeon, 35208, Republic of Korea
Facsimile No. +82-42-481-8578

Authorized officer
HAN, Joong Sub
Telephone No. +82-42-481-3578

INTERNATIONAL SEARCH REPORT

Information on patent family members

International application No.

PCT/US2017/022122

Patent document cited in search report	Publication date	Patent family member(s)	Publication date
US 2003-0168219 A1	11/09/2003	AU 2003-207626 B2	17/01/2008
		BR 0307069 A	01/02/2005
		BR 0307069 B1	07/08/2012
		CA 2474063 A1	31/07/2003
		CA 2474063 C	01/04/2008
		GB 2401627 A	17/11/2004
		GB 2401627 B	15/06/2005
		NO 20043479 A	04/10/2004
		US 6866101 B2	15/03/2005
		WO 03-062595 A1	31/07/2003
EP 2434090 A2	28/03/2012	AU 2011-224003 A1	12/04/2012
		AU 2011-224003 B2	24/07/2014
		CA 2752336 A1	24/03/2012
		CA 2752336 C	08/04/2014
		EP 2434090 A3	23/04/2014
		RU 2011139127 A	27/03/2013
		RU 2483197 C1	27/05/2013
		US 2012-0073829 A1	29/03/2012
		US 8616291 B2	31/12/2013
US 2013-0056222 A1	07/03/2013	AU 2012-216480 A1	21/03/2013
		AU 2012-216480 B2	03/09/2015
		CA 2788889 A1	07/03/2013
		CA 2788889 C	28/10/2014
		EP 2568107 A1	13/03/2013
		US 8640769 B2	04/02/2014
EP 0915230 B1	14/07/2004	DE 69825013 T2	11/11/2004
		EP 0915230 A2	12/05/1999
		EP 0915230 A3	14/02/2001
		US 6302210 B1	16/10/2001
WO 2015-084529 A1	11/06/2015	US 2015-0151421 A1	04/06/2015