March 2, 1937. E. C. BERNDT ET AL 2,072,417

METHOD OF IRRADIATING SUBSTANCES WITH ACTIVE RAYS

Original Filed Jan. 19, 1934 8 Sheets-Sheet 1

Fig. 1

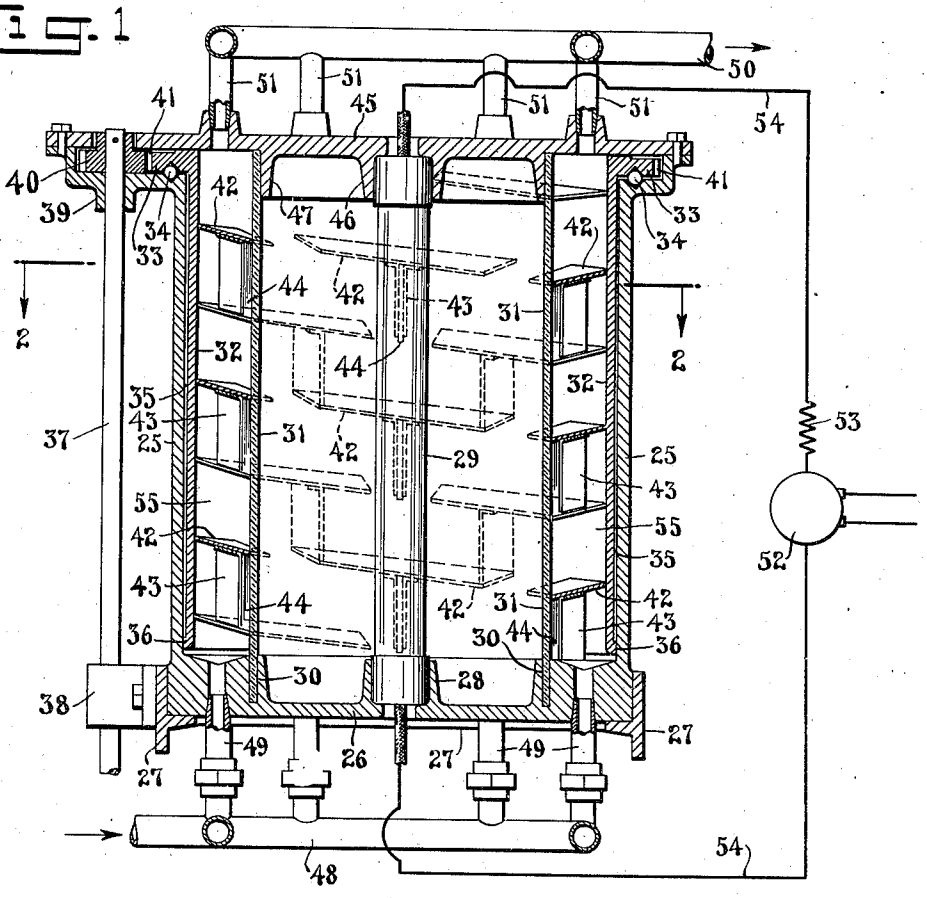

Fig. 1-A

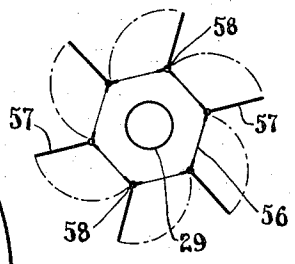

Fig. 2

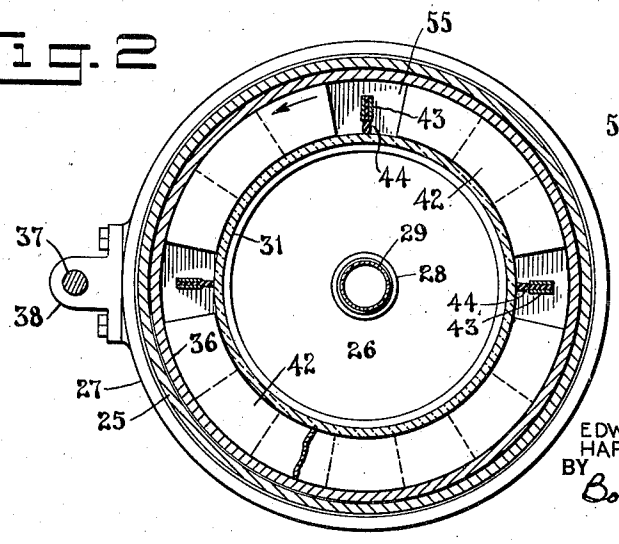

INVENTORS
EDWARD C. BERNDT
HARRY M. CREIGHTON
BY Bohleber & Ledbetter
ATTORNEYS

March 2, 1937. E. C. BERNDT ET AL 2,072,417

METHOD OF IRRADIATING SUBSTANCES WITH ACTIVE RAYS

Original Filed Jan. 19, 1934 8 Sheets-Sheet 2

Fig. 3

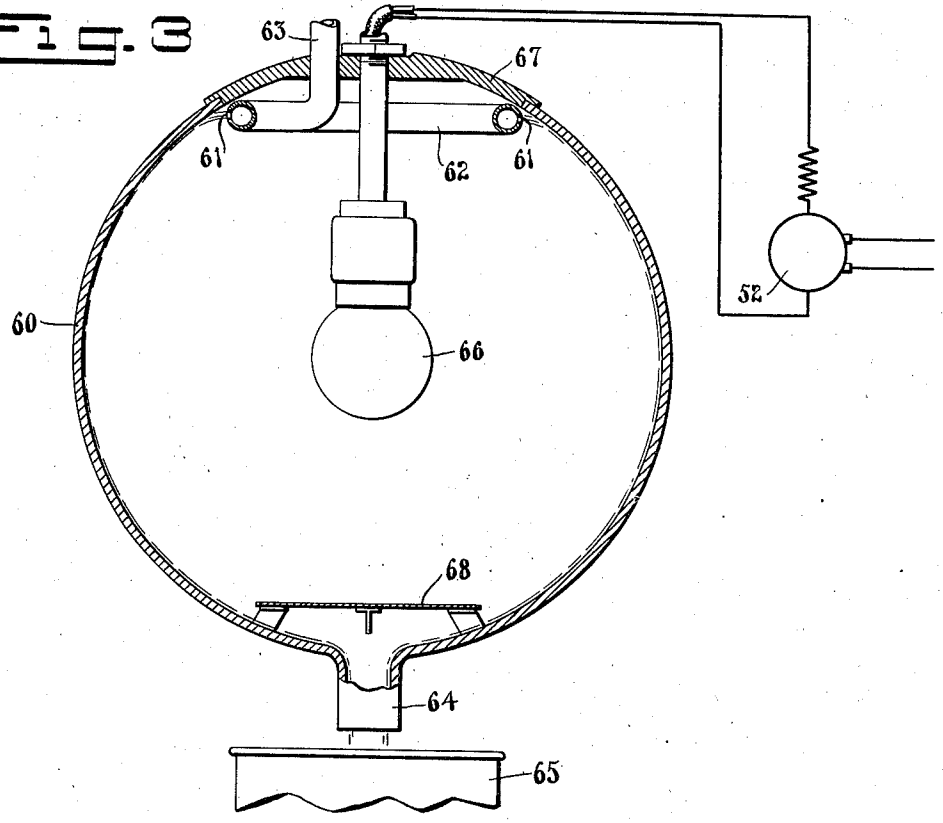

Fig. 4

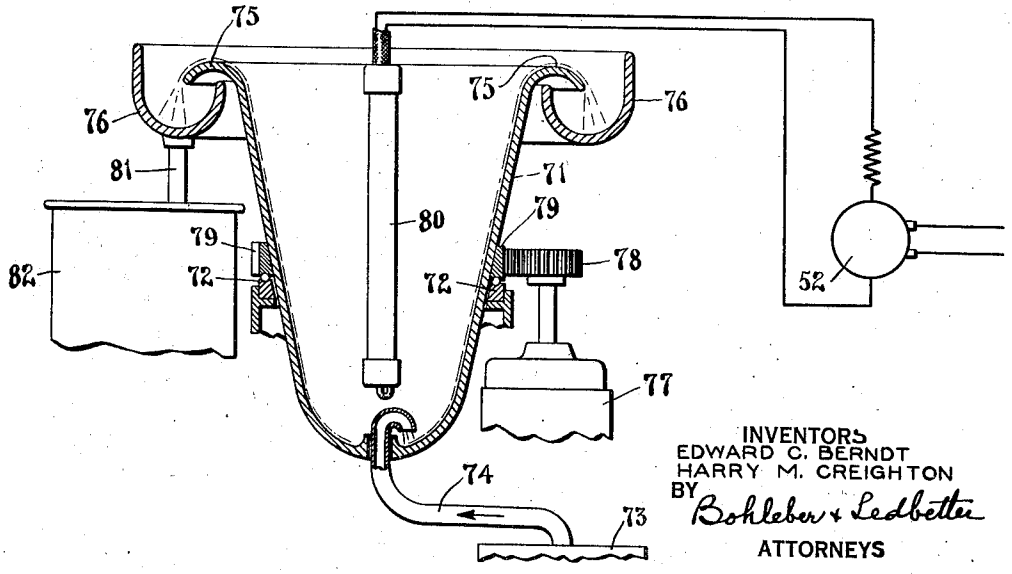

INVENTORS
EDWARD C. BERNDT
HARRY M. CREIGHTON
BY Bohleber & Ledbetter
ATTORNEYS

March 2, 1937. E. C. BERNDT ET AL 2,072,417

METHOD OF IRRADIATING SUBSTANCES WITH ACTIVE RAYS

Original Filed Jan. 19, 1934 8 Sheets-Sheet 3

Fig. 5

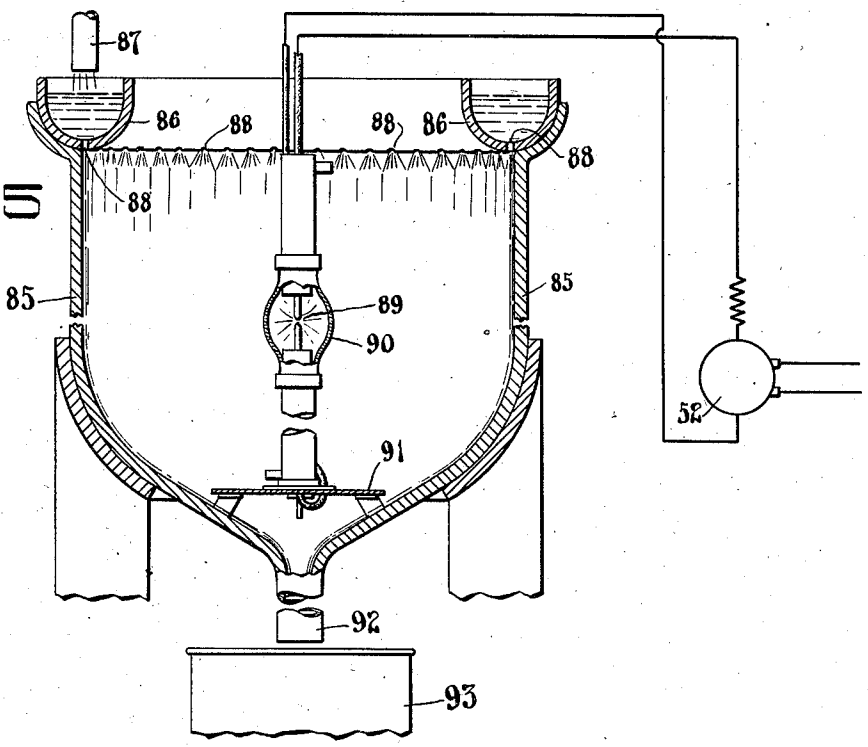

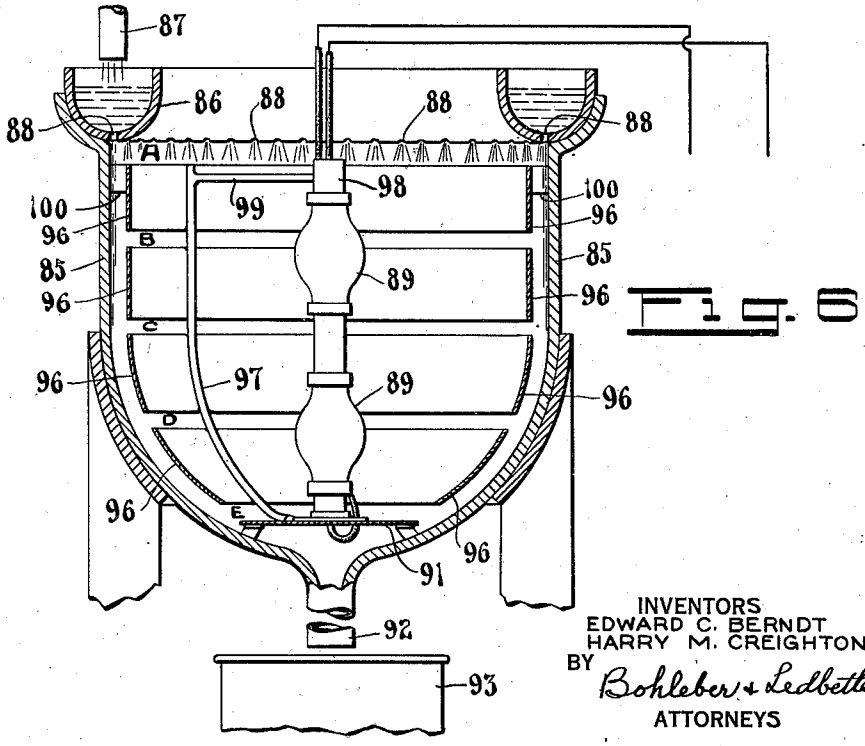

Fig. 6

INVENTORS
EDWARD C. BERNDT
HARRY M. CREIGHTON
BY Bohleber & Ledbetter
ATTORNEYS

March 2, 1937. E. C. BERNDT ET AL 2,072,417

METHOD OF IRRADIATING SUBSTANCES WITH ACTIVE RAYS

Original Filed Jan. 19, 1934 8 Sheets-Sheet 4

Fig. 7

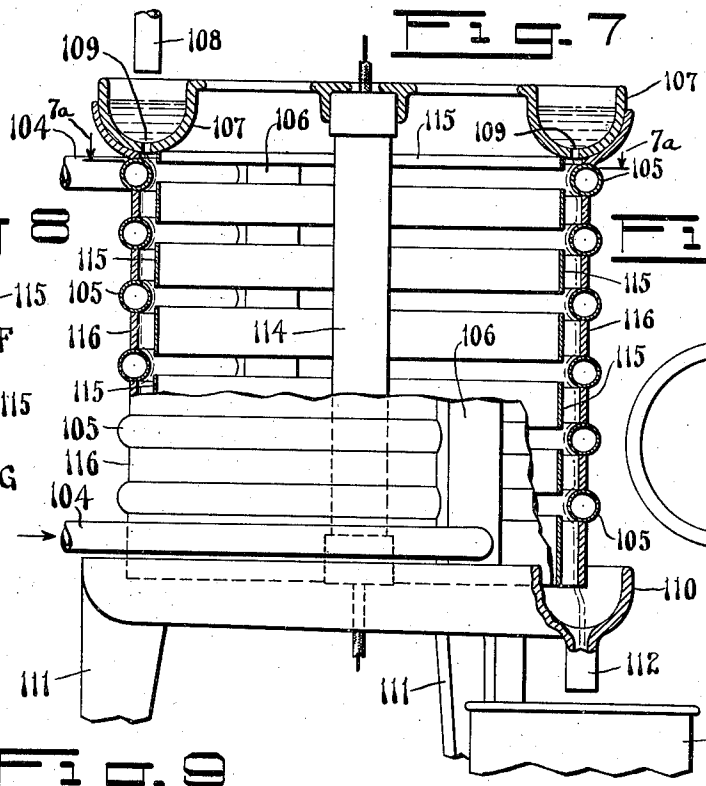

Fig. 8

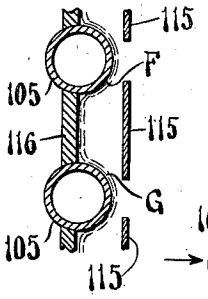

Fig. 7-a

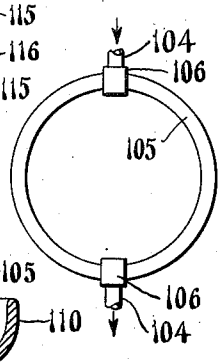

Fig. 9

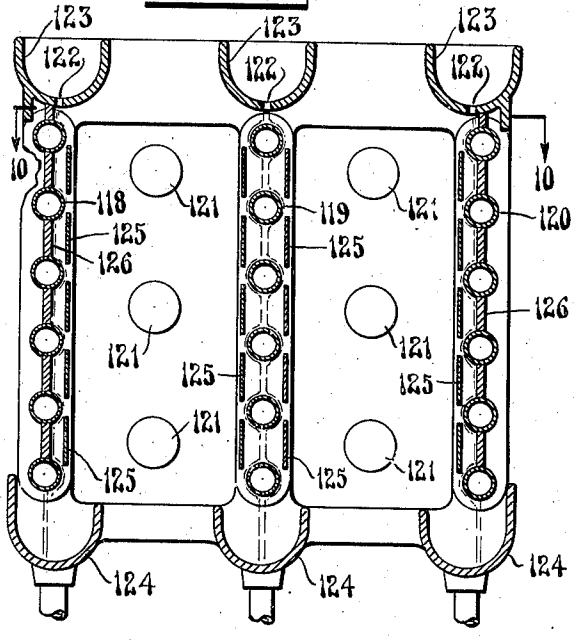

Fig. 10

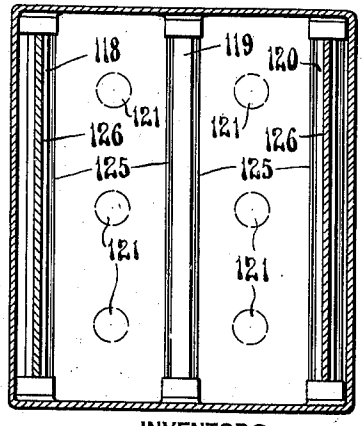

INVENTORS
EDWARD C. BERNDT
HARRY M. CREIGHTON
BY
Bohleber & Ledbetter
ATTORNEYS

March 2, 1937. E. C. BERNDT ET AL 2,072,417

METHOD OF IRRADIATING SUBSTANCES WITH ACTIVE RAYS

Original Filed Jan. 19, 1934 8 Sheets-Sheet 5

Fig. 11

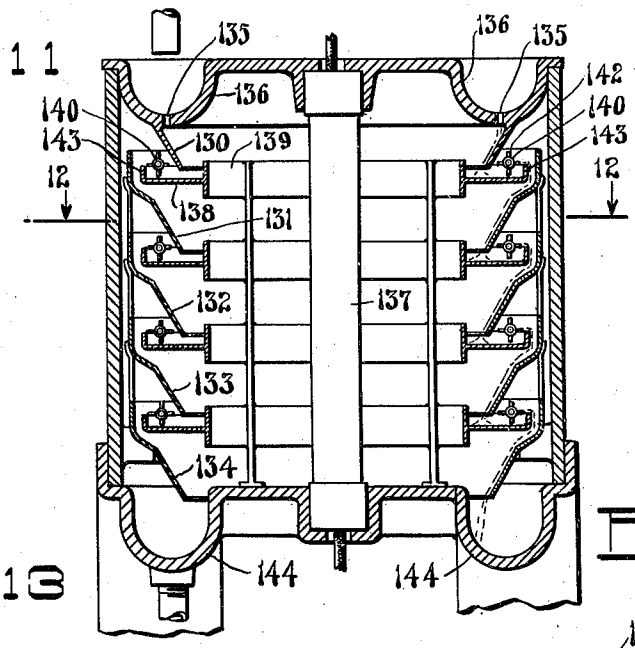

Fig. 12

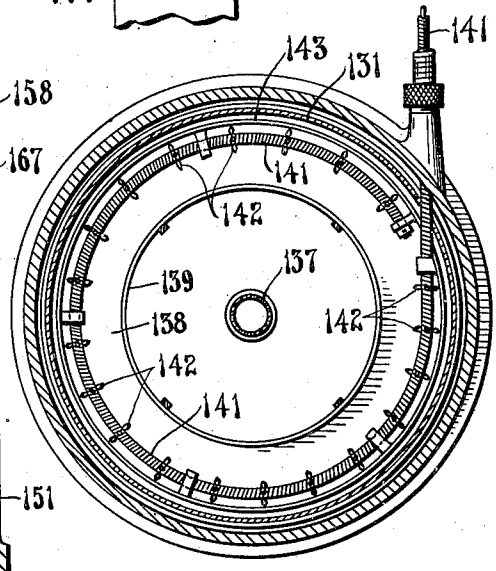

Fig. 13

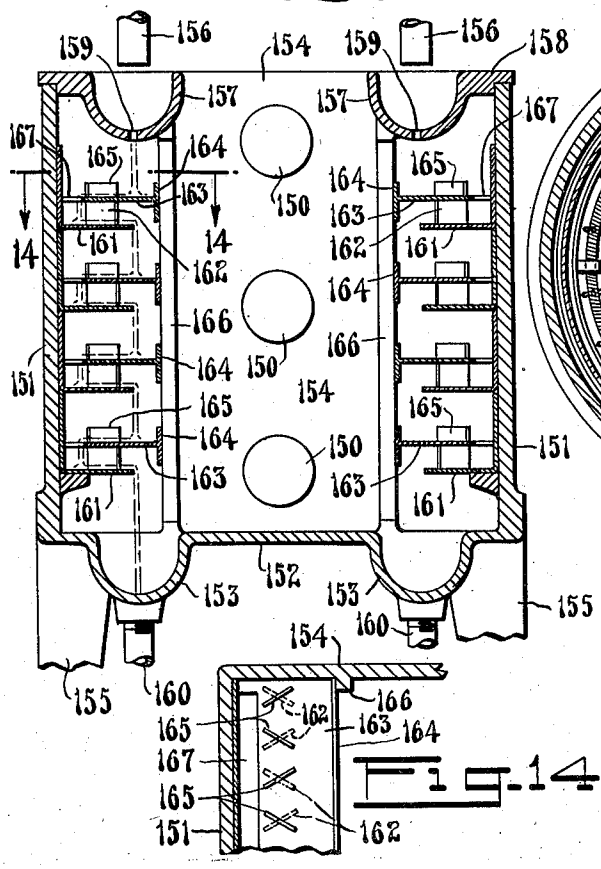

Fig. 14

INVENTORS
EDWARD C. BERNDT
HARRY M. CREIGHTON
BY
Bohleber & Ledbetter
ATTORNEYS

March 2, 1937. E. C. BERNDT ET AL 2,072,417

METHOD OF IRRADIATING SUBSTANCES WITH ACTIVE RAYS

Original Filed Jan. 19, 1934 8 Sheets-Sheet 6

Fig. 15

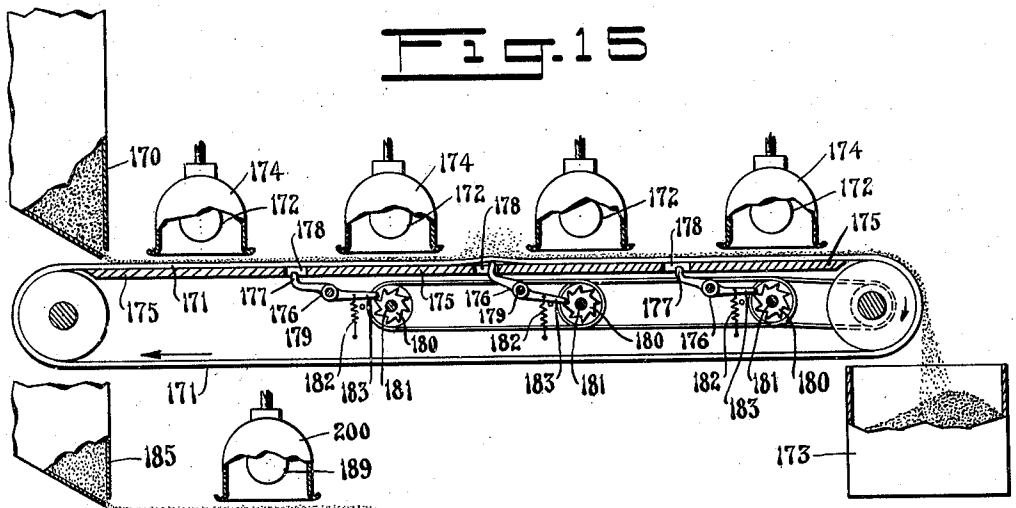

Fig. 16

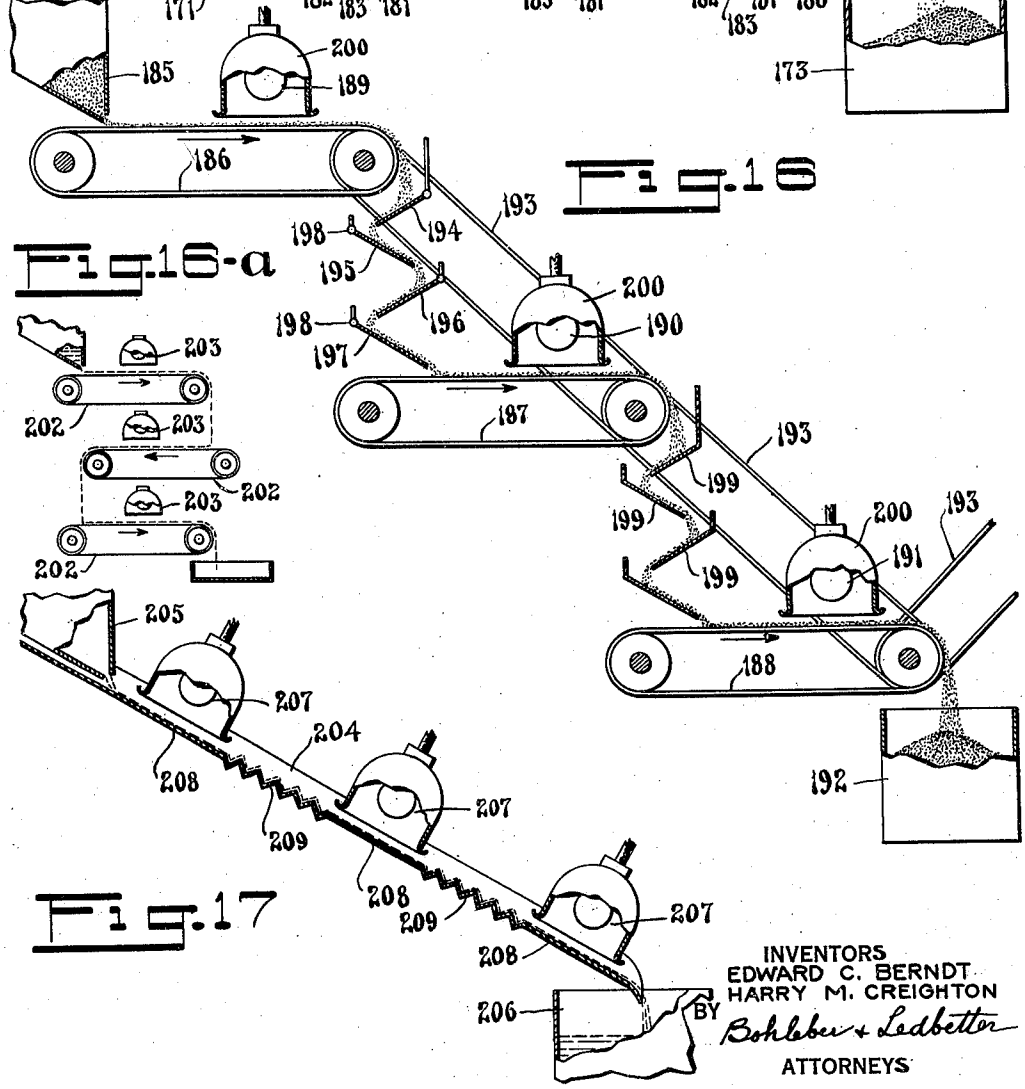

Fig. 16-a

Fig. 17

INVENTORS
EDWARD C. BERNDT
HARRY M. CREIGHTON
BY Bohleber & Ledbetter
ATTORNEYS

March 2, 1937. E. C. BERNDT ET AL 2,072,417

METHOD OF IRRADIATING SUBSTANCES WITH ACTIVE RAYS

Original Filed Jan. 19, 1934 8 Sheets-Sheet 7

Fig. 18

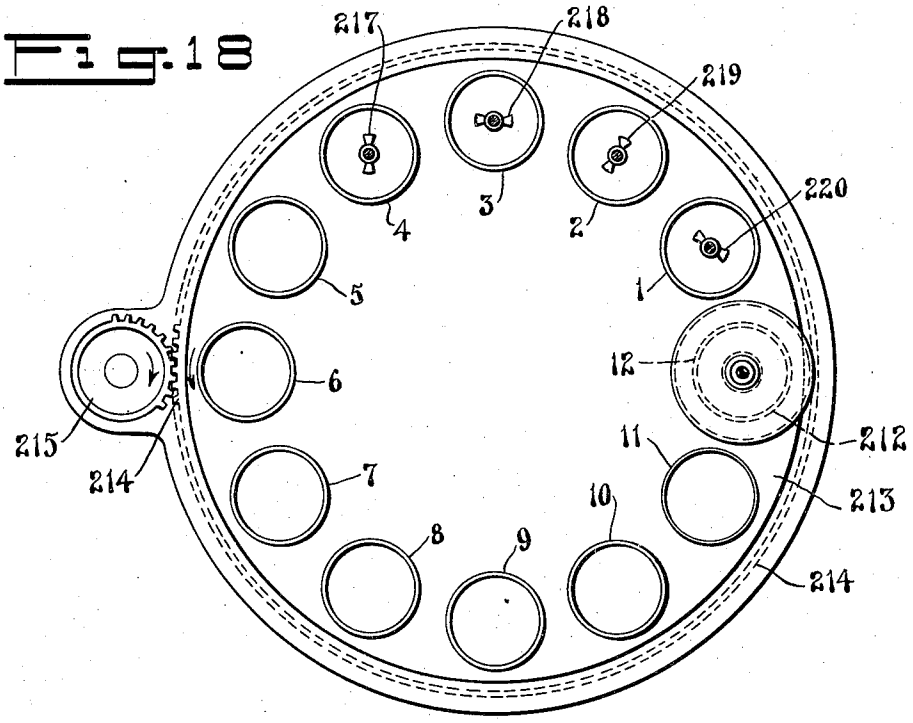

Fig. 19

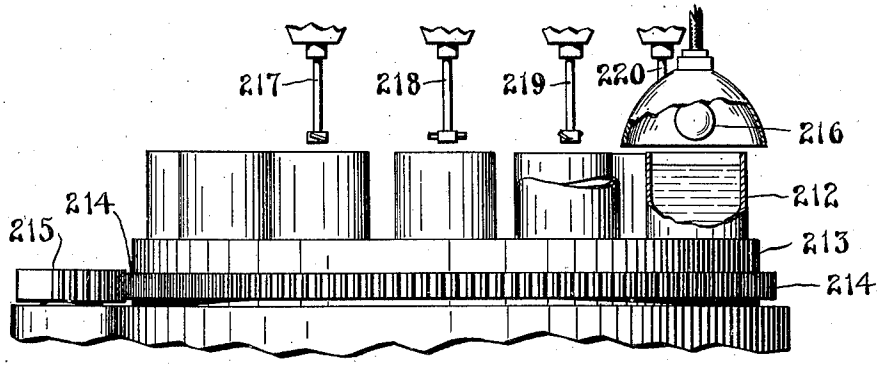

INVENTORS
EDWARD C. BERNDT
HARRY M. CREIGHTON
BY
Bohlebur & Ledbetter
ATTORNEYS

March 2, 1937. E. C. BERNDT ET AL 2,072,417

METHOD OF IRRADIATING SUBSTANCES WITH ACTIVE RAYS

Original Filed Jan. 19, 1934 8 Sheets-Sheet 8

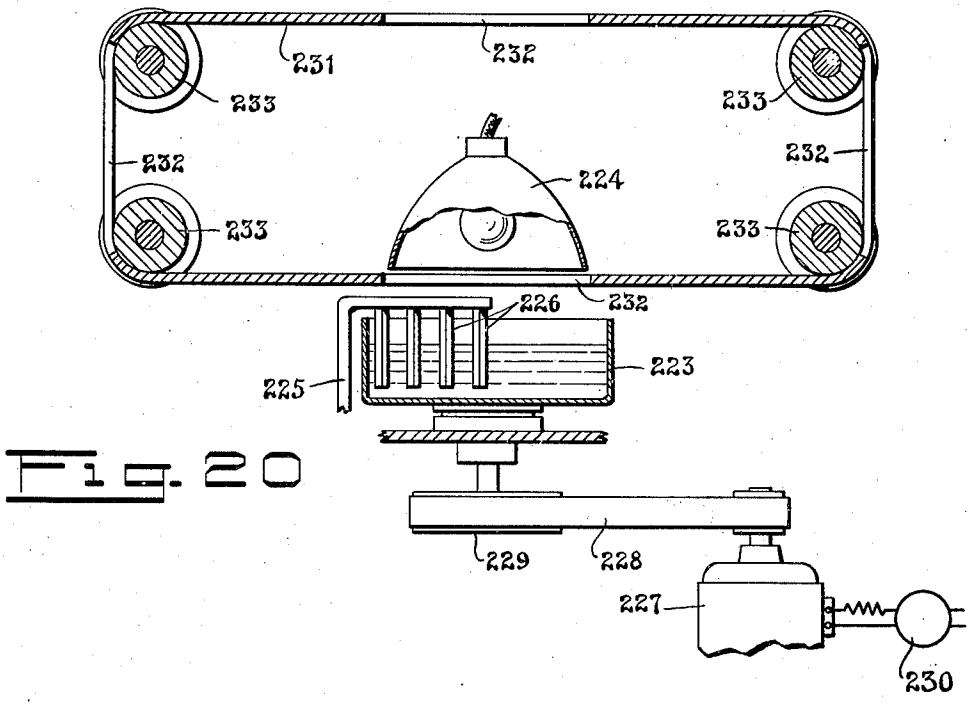

Fig. 20

Fig. 21

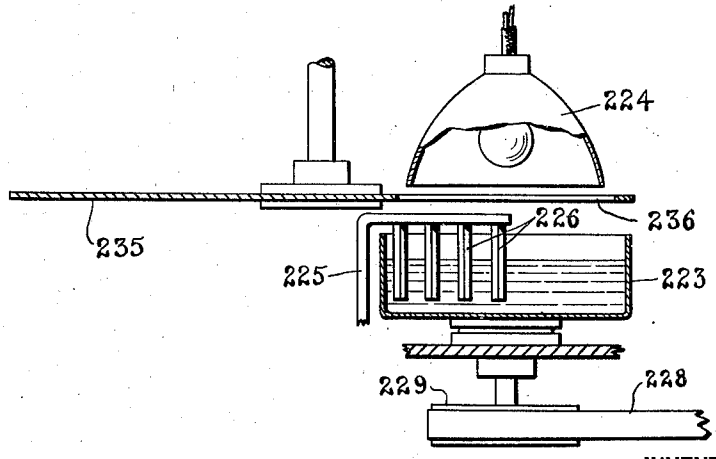

INVENTORS
EDWARD C. BERNDT
HARRY M. CREIGHTON
BY
Bohlebe & Ledbetter
ATTORNEYS

Patented Mar. 2, 1937 2,072,417

UNITED STATES PATENT OFFICE

2,072,417

METHOD OF IRRADIATING SUBSTANCES WITH ACTIVE RAYS

Edward C. Berndt, Norwalk, and Harry M. Creighton, East Norwalk, Conn., assignors to The R. U. V. Engineering Corporation, South Norwalk, Conn., a corporation of Delaware

Application January 19, 1934, Serial No. 707,257
Renewed May 26, 1936

29 Claims. (Cl. 99—13)

This invention relates to the method and apparatus of treating or irradiating substances with active rays such as ultraviolet rays to impart beneficial properties or effects thereto and more particularly to the method and apparatus for the treatment of such substances as are susceptible of injury during or by an ultraviolet ray treatment.

Furthermore, this invention relates to certain improvements in both the method and apparatus for the irradiation of substances particularly described and/or claimed in our copending application entitled Active ray treating devices, filed January 2, 1930 and serially numbered 418,027; and our application entitled Method of irradiating substances with active rays, filed January 16, 1933 and serially numbered 652,020.

It is well known that active rays, such as ultraviolet rays, have various effects on different substances. For example, these rays will kill bacteria and also impart to certain substances a property which is now called vitamin D. Active rays will also stimulate bacteria rather than kill them if the treatment is mild enough. Moreover, it has been found desirable to use these rays for the sterilization and/or activation of milk, fruit juices, malt products, wines, spiritous liquors, beer and many other partially opaque substances. It is to be particularly noted that with this method milk can be sterilized with ultraviolet rays and at the same time the vitamin D effect produced therein. There are also cases where it is desirable to inactivate enzymes in substances, and in such cases the method to be hereinafter described is also applicable. There are also other reasons for the treatment of substances with active rays such as to produce beneficial chemical reactions or to irradiate oils and petroleum products to impart to them healing effects or other properties. However, the use of active rays may result in producing both detrimental and beneficial effects, and we have found it is highly important for the irradiation of a substance to be accurately controlled to produce the result desired.

An example of the importance of this control may best be illustrated in the consideration of the irradiation of milk. We know that the germs which infect and propagate in milk can be destroyed with ultraviolet rays. We further know these rays will activate or produce vitamin D in milk when it is irradiated. We also know that certain degrees of over-irradiation of portions of the milk, or particles therein, will change the taste, odor and other properties of the milk to such an extent that it may be impossible or actually dangerous to use it for human food. Hence, in the irradiation of milk it is highly important to accurately control the activation thereof in imparting thereto or inducing a vitamin D effect therein or in the irradiation thereof to sterilize the same, regardless of the degree of the result sought if the milk is to be used for food.

Although ultraviolet rays have been known to have a powerful destructive effect on bacteria, and although workers in this field have experimented with milk sterilization for many years, this use of ultraviolet rays has not, so far as we know, come into commercial use. This same holds true of other substances which are relatively opaque to ultraviolet rays. We have therefore developed a method of irradiation and certain improvements in irradiating apparatus to advance the art of accurately controlled irradiation, for any purpose and particularly in the fields of sterilization and activation and make possible the use of these active rays to better advantage than has been possible with known methods and apparatus.

Accordingly, an important object of our present invention is to describe a method and produce certain fundamental types of apparatus, for treating substances in which the amount of ray energy employed in the treatment is accurately controlled and wherein application of such treatment is effected under such operating conditions that one is able to forecast the results to be obtained by such treatment when the effect and correlation of the variables attending the treatment of the substances are understood and employed.

Our method relates to the irradiation of substances capable of having beneficial or detrimental effects imparted thereto and comprises treating such a substance with a number of relatively short intermittent exposures to radiant energy emanating from one or more sources or stages of active rays, no one of said exposures being sufficient to give the whole body of the substance the amount of treatment necessary to produce the ultimate desired beneficial results or effects, and mixing the substance between exposures such that said mixing takes place away from the action of the rays to permit one to control the distribution and the amount of treatment received by the substance. As explained in our copending application Ser. No. 652,020, the proper combination of the time of each exposure or amount of treatment and the number of exposures will give a much better result than that obtained if the total time of treatment were given without regard to the amount of each exposure. The num-

ber of treatments to be given depends, among other things, upon the layer thickness used, the time limits of exposure and the amount of desirable or beneficial effects desired and the amount of undesirable effects that may be tolerated.

To practice our method it is necessary to understand two important principles thereof, namely, first, the minimum total time of exposure or the minimum amount of treatment required to impart beneficial properties or effects to a substance, and, second, the maximum total time of exposure or the maximum amount of treatment to which said substance may be subjected before undesirable, detrimental effects are produced therein. With this understanding, our invention, in one of its broad aspects, comprises exposing a substance to the influence of active rays of sufficient effectiveness and for such duration as to give the same a fractional treatment and to impart beneficial effects thereto, but for a duration insufficient to impart undesirable effects thereto, mixing said substance after such fractional treatment, and then alternately repeating this cycle until the desired beneficial effects throughout the substance have been attained, these repetitions being less than that required to impart detrimental effects thereto. The layer thickness used for the treatment will depend, among other things, upon the character of the substance itself. A clear knowledge of this method, as hereinafter set forth, will indicate what layer thickness should or can be used in each individual irradiating case.

We have found that it is very important to so irradiate a substance that the amount of irradiation or treatment received by different portions of the substance may be carefully and accurately controlled between certain fixed limits above described. For example, in the treatment of milk, if the treatment is not accurately controlled one may impart to the whole body of milk only a small percentage of the potential vitamin D effect, which is beneficial, and at the same time may destroy vitamins naturally present in the milk, which may be just as important or even more important than vitamin D. Also, one may injure the taste or odor of the milk to such an extent that the milk cannot be used for human consumption, or it is said one may destroy a large portion of the vitamin D effect previously produced, all of which are detrimental effects caused by the treatment.

We have also found that it takes a lesser amount of treatment to produce vitamin D in milk than it does to produce changes in the taste or odor of the milk. Indeed, we have found, as will be hereinafter explained, that the time of exposure necessary to produce the vitamin D effect is much shorter than the times mentioned by other workers in the literature on the subject. Some workers report times of exposure varying from eight seconds up to several minutes and even hours. We have in our experiments produced the vitamin D effect in milk with an exposure which was about one twentieth (1/20th) of a second, and in some cases we have produced the effect with even a shorter time of exposure. We have also found that some types of bacteria are killed with an exposure of about one two-hundredth (1/200th) of a second or even less, while working at a distance of one and one quarter inches from a ray source. We have also found that the amount of irradiation required to kill harmful germs in milk is less than the amount of irradiation necessary to cause a change in taste and odor. Our experiments show that there is a considerable difference between the amount of active ray energy required to produce vitamin D and the amount required to destroy it, if it can be destroyed by the same type of energy that produced it. Our method therefore contemplates accurately controlling the irradiation of a body of milk or other substances, to produce, to a high degree, if desired, beneficial properties therein with a minimum amount of harmful effects, if any.

By extensive experimentation we have discovered certain general rules of treating which are readily adapted to commercial treatment of various substances capable of having beneficial or detrimental effects imparted thereto. For example, we have found it is well to irradiate milk by moving it through a field of ultraviolet rays having an intensity in proportion to the concentration of the element to be affected by the treatment.

It will be noted that our method does not require the use of a film of the substance through which the rays will penetrate, although it may be advisable to irradiate with such a film if it can be produced. If one uses a film thicker than that through which the rays will penetrate, all of the energy entering the substance will be absorbed in the substance, while if a thin film is used a portion of the energy is dissipated outside the substance. It will be noted also that in our method the substance is agitated or mixed when it is away from the action of the rays. The mixing or agitating may be performed in any one of a number of ways although we have found that the mixing accompanying the treatment of a substance during a plurality of passes through a single machine, or through a series of machines, as set forth in our pending application Ser. No. 418,027 above referred to, is sufficiently effective to accomplish satisfactory commercial results with many substances. It will be understood, for example, that when, in our method, we refer to the step of mixing, this mixing may be accomplished in any one of a number of ways and to any desired degree depending upon the problem at hand and the results to be desired.

In using our process it is desirable to take into consideration the intensity and the wave lengths of active ray energy at all points in the field of action. Considering, for instance, the surface of the substance being exposed, if we find the intensity at one point of this surface to be lower than the intensity at another point, or if the wave lengths are different at different points, it is evident that the rate of flow should be faster where the high intensity or more effective wave lengths exist than where the low intensity or weaker wave lengths exist, to effect a uniform treatment of the surface during each exposure. Therefore, a simple method to control one element effecting the amount of treatment given to a substance, is to work in a field of rays of uniform intensity having similar wave lengths. The amount of treatment received by particles the same distance from the source will then be about the same for each exposure and once the characteristics of the substance to be treated are understood, the amount of treatment received is a function of the time of exposure. The time of exposure for any part of a substance cannot be computed without a consideration of the partic-

ular wave lengths available, as well as the intensity of said rays at the point of utilization. However, it will be hereinafter seen that good results may be obtained with our method even if the above directions are not precisely followed. In a general way it can be said that instead of trying to irradiate the complete layer of a substance in one exposure, as is done by those using a thin film or thin stream or by those who agitate while under the action of the rays, we only try to beneficially irradiate a relatively small portion, or, you might say, the skin or surface of the layer or film and then mix the substance while it is away from the action of the rays and thereafter return it again for treatment, repeating the cycle for as many treatments as are necessary to give the results desired.

We have discovered that this cyclic method of giving a substance fractional or several properly timed short intermittent periods of exposure in place of a single period of one continuous exposure, for a given number of times and mixing between exposures, gave us unexpectedly excellent results. We have found that with a given amount of active ray energy to be applied to a substance, the amount of beneficial effect imparted to a substance varies with the number of exposures and mixings given. We have also found that as a rule, the number of treatments to which a substance may be safely subjected depends upon the relation between the amount of treatment required to deleteriously affect the substance and the minimum amount of treatment necessary to produce a beneficial effect in said substance. If the time of each exposure is too long, or the amount of treatment given is too great, then one is obliged to reduce the number of exposures in order to avoid detrimental effects, and consequently the amount of beneficial effects will be less than if shorter exposures and more of them were used.

According to the teachings herein, the time of each exposure, or the amount of treatment given during each exposure, may be readily determined by actually treating and testing samples of the particular substance to be treated. Likewise, the most favorable time intervals between exposures may be readily determined. This is particularly important in sterilizing, because if the time intervals are not correct the effects from any preceding exposure or exposures will not be fully utilized in the completed treatment. We have found, as already stated, that the layer thickness used when the substance is presented for irradiation has a bearing on the number of exposures to be given and the time of each exposure. We have also found that the degree of mixing given between exposures will also vary the results. Thorough mixing between exposures gives the most accurate control of the amount of treatment and therefore the best results. However, this degree of mixing may not be necessary in many cases where the character of the substance does not require it, or because the maximum results are not desired.

For an understanding of the proper construction and operation of apparatus to be used in practicing our method of irradiation, whereby the amount of irradiation imparted to a substance may be properly controlled, one must, for the reasons indicated above, appreciate the importance and take into consideration the following factors incident to such treatment.

(1) The intensity and wave lengths of the active rays at the point or zone at which they are applied to the substance being treated.

(2) The time required to produce beneficial effects in the substance.

(3) The time required to produce intolerable detrimental effects in the substance.

(4) The depth of layer or volume of the substance at the time it is presented to the rays for treatment.

(5) The rate of agitation of the substance at the time of treatment.

(6) The degree of beneficial effect which it is desired to produce in the substance.

(7) The degree of detrimental effect which may arise from said treatment and the degree of said effects which can be tolerated in the substance after the irradiation thereof has been completed.

(8) The time of each exposure of the substance being treated.

(9) The time of agitation or amount of mixing between exposures.

(10) The amount of mixing that can be tolerated during exposure.

Other objects of our invention will become apparent to those skilled in the art from the detailed description taken in connection with the more or less diagrammatic drawings forming a part hereof, and in which

Figure 1 shows a sectional elevational view of an apparatus in which a body of the substance to be irradiated is simultaneously agitated and pumped or otherwise forced upwardly through a treating chamber past a source of ultraviolet rays, controlled by any suitable means for intermittently cutting off the action of said rays upon the substance, such for example as by means of a timing switch for turning on and off the current, supplied thereto to periodically produce ultraviolet rays of such intensity and for such duration to beneficially treat the substance and discontinue said treatment by extinguishing said rays for predetermined time intervals during which the previously treated substance is thoroughly mixed with the untreated substance in said chamber.

Figure 1*a* illustrates a shutter mechanism which may be used in combination with the machine of Figure 1 and a continuously burning lamp to produce the effect of a flashing ray source.

Figure 2 is a sectional plan view taken on line 2—2 of Figure 1 and looking in the direction of the arrows.

Figure 3 shows an apparatus comprising a spherical container for irradiating a substance as it flows in the form of a comparatively thin film down the inside surface thereof, past a source of ultraviolet rays intermittently turned on and off for predetermined time intervals.

Figure 4 shows an apparatus comprising a revolving cone for irradiating a substance by causing the same to flow through a field of active rays, controlled by any suitable on and off timing switch or shutter mechanism.

Figure 5 shows an apparatus in which a substance to be irradiated flows from a trough down the sides of a vessel past a source of ultraviolet light controlled by any suitable on and off timing switch or shutter mechanism.

Figure 6 shows an apparatus similar to that shown in Figure 5 in which the substance flows down the inside wall of a vessel past a source of ultraviolet rays and intermittently out of the region of said rays by passing successively behind

a plurality of spaced shields to intermittently arrest and prevent the treatment of said substance as it is removed from the effect of the rays emanating from the source.

Figure 7 shows an apparatus comprising a cylindrical cooler coil over which a substance to be irradiated is adapted to flow, from a trough, over the inside surfaces of the pipes of said coil and drop from one pipe to another behind a shield opaque to ultraviolet rays.

Figure 7*a* is a view taken on line 7*a*—7*a* of Figure 7 and looking in the direction of the arrows.

Figure 8 is an enlarged cross-sectional view of two of the coils shown in Figure 7 and illustrates the path traversed by the substance in dropping from one coil to another behind the shield.

Figure 9 shows an apparatus in which a substance is adapted to flow from troughs disposed on the top of conventional washboard type cooler coils past a source of ultraviolet rays and be periodically removed from the influence of such rays by passing successively behind a plurality of spaced shields.

Figure 10 is a view taken on line 10—10 of Figure 9 and looking in the direction of the arrows.

Figure 11 shows an apparatus in which a substance is adapted to be treated by flowing under the influence of ultraviolet rays successively down the inside surface of a plurality of conical planes and after passing over each plane to be conducted to a point removed from the action of the rays where the substance is mixed by agitators and thence conducted to another plane to receive a subsequent treatment.

Figure 12 is a view taken on line 12—12 of Figure 11 and looking in the direction of the arrows.

Figure 13 illustrates an apparatus for irradiating a substance as the same passes a source of ultraviolet rays in an open free falling stream and means for periodically interrupting the fall of the substance to cause the same to flow away from the influence of the light to become mixed and thereafter returned to the light for another treatment during a similar subsequent period of fall.

Figure 14 is a sectional view taken on line 14—14 of Figure 13, looking in the direction of the arrows.

Figure 15 illustrates a device for irradiating a granular or powdered substance by conveying the same past a source of ultraviolet light in combination with means for agitating the substance between exposures to said light and while the same is removed from the influence thereof.

Figures 16 and 16*a* illustrate modifications of the device shown in Figure 15 in that after each period of irradiation the substance is adapted to be mixed by either falling successively over inclined planes before being subjected to a subsequent treatment (Figure 16), or by being delivered by one conveyor to another conveyor moving in an opposite direction.

Figure 17 illustrates a device whereby a substance may be irradiated by being conducted down an inclined plane past a plurality of spaced sources of ultraviolet light, the plane being smooth in the region immediately under said lights where the substance is treated, and corrugated in the region between the lights to mix the substance between treatments.

Figures 18 and 19 are plan and elevational views, respectively, of a device for irradiating a substance disposed in a plurality of vessels successively presented to a source of ultraviolet rays for treatment and wherein means is provided for mixing the substance for a predetermined period of time after said treatment, and thereafter permitting the substance to quiet down in the vessel before being presented for a subsequent treatment.

Figure 20 shows an irradiating apparatus in combination with a perforated belt for periodically interrupting the passage of ultraviolet rays to a substance for predetermined periods during which the substance is mixed and permitted to come to rest before a subsequent treatment.

Figure 21 is a modification of the device shown in Figure 20 wherein a rotating perforated disc is employed to intermittently interrupt the passage of the treating rays.

The apparatus shown in Figures 1 and 2 comprises an open cylindrical casing **25** having a bottom **26** supported in any suitable way such as indicated at **27**. A socket **28** is formed in the bottom **26** to receive the lower end of a quartz mercury vapor lamp **29**. A cylindrical groove **30** is formed in the bottom of the casing to receive a quartz tube **31** disposed about the lamp **29**. A revolubly mounted cylindrical shell **32** having a flange **33**, supported on bearings **34** is disposed in the casing **25**. A clearance space **35** is constructed between the shell **32** and the casing. A bearing surface **36** is formed at the bottom of the shell to contact with the inside of the casing so that when the shell is rotated it is supported on the bearings **34** and bearing surface **36**.

A shaft **37** adapted to be rotated by any suitable means (not shown), is mounted on the outside of the casing in bearings **38** and **39**. A pinion **40**, meshing with teeth **41** formed on the periphery of the flange **33**, is mounted on one end of the shaft **37** so that when the shaft is rotated the pinion will rotate the shell **32**. A plurality of spaced agitators **42** are secured to the inside of the shell **32** and disposed from top to bottom thereof so as to define a broken helical vane in the space between the tube **31** and shell **32**. The agitators **42** are of such width that the inner edges thereof terminate at a point proximate the quartz tube **31** without actually touching the same. Tube wipers **43** carrying any suitable wiping material **44**, for wiping the outside surface of the tube **31** when moved with respect thereto, are disposed in staggered relation between the agitators **42**. A cover **45**, having flanges **46** and **47** adapted to support the upper ends of the lamp **29** and the tube **31**, respectively, is provided for closing the opening at the top of the casing **25** and to serve as a retainer for the shell **32**.

A pipe **48** having a plurality of inlet connections **49** opening into the annular space between the tube **31** and shell **32** serves as a means for introducing substance to be treated into the machines. A similar pipe **50** having connections **51** serves as a means to conduct the substance out of the machine. Current from any suitable source of supply is conducted to the lamp **29** through a time switch **52**, resistance **53** and conductors **54**. The switch **52** is constructed in any suitable way whereby it is adapted to either manually or automatically turn the current supplied to the lamp on and off, so that the lamp is intermittently energized for predetermined exposure periods and the rays of ultraviolet light from the lamp are available for the treatment of a

substance during that time, in order to treat and thereafter permit the substance to be mixed in the manner above described and to be hereinafter more particularly described. Inasmuch as the switch mechanism per se, necessary to accomplish the described operation forms no part of our present invention, it is deemed unnecessary to describe the same further than to merely state its functional characteristics.

In cases where an on and off time switch mechanism presents practical difficulties, a continuous light in combination with means for intermittently shielding or cutting off the action of the rays may be used. Such a device is diagrammatically illustrated in Figure 1*a* wherein the lamp **29** is surrounded by a shutter **56** having a plurality of opaque leaves **57** operated periodically by any suitable means, not shown, for opening and closing the leaves **57** on hinges **58**. In this form of device it will be understood that when the leaves are opened they may be disposed radially with respect to the lamp and offer only slight obstruction to the rays emanating therefrom.

We will now describe the manner in which the machine illustrated in Figures 1, 1*a* and 2 may be operated to practice our method of irradiation in the treatment of milk to impart the vitamin D effect thereto. In this explanation, milk has been selected as the substance to be irradiated merely by way of example, and because the beneficial and detrimental effects of such treatment are so pronounced. Milk to be irradiated in this machine is forced or otherwise permitted to flow through the pipes **48—49** at a predetermined speed into the space or treating chamber **55** between the tube **31** and shell **32** while the shell, agitators, and wipers, by means of the shaft and pinion **37—40**, are rotated as a unit in a counter-clockwise direction (as seen in Figure 2) around the stationary quartz tube **31**. It will be noted that the helically disposed agitators **42** are rotated in a direction tending to move the substance in the treating chamber in a direction opposite to that in which it is forced or permitted to flow therethrough, to induce a continuous and effective state of agitation in the substance as it passes up through the machine and until it reaches the outlet pipes **50—51**.

Generally speaking, if the distance between the lamp **29** and the tube **31**; the thickness of the layer of the milk in the treating chamber, and the intensity and wave lengths of the ultraviolet rays emanating from the lamp have all been selected or constructed to suit the result to be obtained, the milk will be properly irradiated with a single passage through the machine when the on-and-off time intervals during which the action of the rays are available for treatment and the rays therefrom cut off, so to speak, by either being extinguished or shielded, and the treatment arrested, is properly controlled by either the time switch **52** or shutter **56** and properly correlated with the rate of flow and rate of agitation of the milk. To accomplish this result the switch or shutter and lamp must be constructed so that ultraviolet rays of sufficient effectiveness and for such duration are made available to produce a beneficial effect in that portion of the milk disposed in the treating chamber proximate the quartz tube **31**. To approach the best control of the amount of treatment to which the various portions of the substance are subjected, the duration of each exposure must be so timed and correlated with other factors that the milk in the treating chamber, notwithstanding it is continuously agitated, will, in effect, be substantially at rest during the exposure and the particles proximate the source will receive the beneficial effect of the exposure. At times, for instance, when the rate of agitation is high, it may be important in being able to effect a beneficial treatment in the proper time to employ only a very short exposure to rays of short wave lengths and of high intensity however other types of rays may be employed when the correlated conditions otherwise permit of their use.

After this initial treatment above described, the switch is turned off or the shutter closed; in other words, the action of rays upon the substance is cut off for such duration that the milk in the treating chamber is mixed to a proper degree during that time. At the expiration of the mixing period the switch is turned on, or the shutter opened, so that substance is again subjected to the action of ultraviolet rays of sufficient effectiveness and for such duration as to produce a beneficial effect in another portion of the milk. Thereafter these steps are repeated until the desired result is attained.

Let us assume that the rate of flow through the machine is such that the milk flows upwardly through the treating chamber at the rate of one inch per second; that the rate of agitation is such that one second is required for a thorough and complete mixing; that the length of the treating chamber is twenty inches; that the depth of the layer of the milk in the treating chamber is ten times that through which the rays will effectively penetrate during that period of exposure which produces a beneficial effect on the portion of the substance proximate the source, namely the skin or surface lying against the quartz tube **31**; and that the intensity of rays used is such that an exposure of 1/100th of a second will produce a beneficial effect in that portion of the substance exposed.

From the above it will be seen that the treating rays be made available for 1/100th of a second to produce a beneficial effect on a portion of the substance in the treating chamber, and cut off or arrested for one second to thoroughly and completely mix the treated portion with the remainder of the substance in the treating chamber. During the time of exposure only 1% of the milk can be mixed, since the time of exposure is 1/100th of that required for complete mixing. During the time the rays are off, however, the milk would be 100% or completely mixed. Since the chamber is twenty inches long, it would take twenty seconds for milk to flow through the same, and during that time while the milk would receive nineteen treatments and mixings, the total time of exposure to the rays of any particle would be only 19/100th second. After one passage through the machine the percentage of possible beneficial effect produced in this apparatus can be determined by actual test or computed empirically. If it is found that one passage through this particular machine does not accomplish the result desired, the substance may be passed through the machine again, provided that to do so would not cause an undesirable detrimental effect by giving some of the particles of the substance an additional exposure of 19/100th of a second.

Suppose, however, after this first treatment milk would stand only an additional exposure of 2/100th second and it is desired to improve the ultimate beneficial effect by a treatment in this

type of machine. We might then reduce the layer thickness. For example, a shell of smaller diameter equipped with suitable agitators may be substituted for the shell **32** above described and the space between the present tube **31** and shell **32** reduced. Assuming this is practical from a commercial standpoint, the layer thickness may be made one-half of that shown in Figures 1 and 2. Now if the same volume of milk is passed through our modified machine it will travel upwardly through the treating chamber at the rate of two inches per second. If the rate of agitation is such as to cause one hundred per cent mixing in one-half the time required before, or in other words, in one-half a second, then with an exposure of 1/100th second, you would have two per cent mixing during exposure. If this is satisfactory for the problem at hand, one could then expose for 1/100th second and shut off the rays for one-half second and thus get nineteen exposures in one passage, and other things being equal the beneficial result would be better than in the first case because the treatment in effect is concentrated, on a smaller volume of the substance. In the case of our modified machine the result may be improved if necessary for the case at hand by using a different lamp, namely, one having ray characteristics or intensities such that 1/200th second gives the same result as the 1/100th second treatment did with the first lamp, and then only one per cent mixing would take place during each exposure.

From the above discussion it is seen that to properly control the irradiation one must at all times take into consideration the factors set forth above.

The best commercial results may be realized in producing a high vitamin content in flowing or agitated milk by using the thinnest layer which is practical and a source of rays of such intensity that only a very short exposure is necessary in order to be able to beneficially treat the milk while it is substantially at rest, and at the same time be able to thoroughly mix the milk between exposures. It may also be said that as the layer thickness is reduced a higher percentage of the total milk in the treating chamber is beneficially treated at each exposure and a lesser number of particles are treated uselessly by having received an unnecessarily long exposure or an insufficient exposure. Carried to the extreme, and to entirely impracticable limits, this leads one in effect to attempt to expose in a film so thin that only one layer of particles can arrange themselves in a film. Now if these particles are bacteria which are only visible under a powerful microscope then it is evident that the ideal thin film cannot be produced. Consequently, our step-by-step method of exposing, then mixing, for properly timed periods, is the only known commercial way of accurately controlling the irradiation of substances which would be deleteriously affected by over-irradiation.

To mix the substance during the time of exposure or treatment causes the over-irradiation of more particles than are over-irradiated by our method, which teaches, among other things, that the treatment of the substance should be effected without substantial mixing.

While we have described an on-and-off switch and shutter in connection with Figures 1 and 2 to enable the substance being treated to be mixed between treatments, it will be understood that this structure is merely illustrative and that other forms of shutters or shields, some of which will be hereinafter described, are adapted to periodically arrest or cut off the action of the light rays and prevent the treatment of any portion of the substance during the mixing period irrespective of whether or not the substance is flowing or is at rest.

Our present invention comprises generally the improvements in apparatus for treating various substances. However, the characteristics of substances and the results which may be obtained in the irradiation thereof vary so widely that one cannot designate which form of apparatus is to be preferred, for the treatment of a particular substance unless the treating problem is considered in the light of the above description. From a purely theoretical consideration, if the rays employed in the treatment of a substance are produced by a point source, the treating chamber should be spherical in shape and the source of rays disposed at the center thereof. On the other hand, if an elongated ray source is employed the treating chamber should be cylindrical and the source disposed at the axis thereof. However, expediency may influence one skilled in the art to disregard merely theoretical considerations for reasons which will become apparent in connection with the description of the modifications to be hereinafter described.

Figure 3 represents an irradiating device comprising a spherical container **60** into which a substance to be irradiated is discharged from a plurality of holes **61** in a coil **62** mounted at the top of the container and connected to an inlet pipe **63**. Substance emerging from the holes **61** is directed against the inside of the container near the top thereof and flows down the side, in a moving stream in which more or less mixing or agitation is constantly taking place, to an outlet **64** where it is collected in container **65**. An ultraviolet ray lamp **66** controlled by an on and off switch **52**, or suitable shutter is disposed at the center of the container. The container is closed by a cover **67** so that the treatment may be effected if it is required in a system from which air is excluded. A shield **68** is suitably mounted in the bottom of the container to prevent the treatment of substance after it has passed thereunder.

Figure 4 represents an irradiating device comprising a cone **71** rotatably mounted in bearings **72**. A substance to be irradiated is pumped or otherwise forced from any suitable reservoir **73** through an inlet pipe **74** and discharged into the bottom of the cone. The substance so introduced is centrifugally distributed over the inside surface of the cone **71** and caused to flow upwardly therein and spill over the lip **75** formed on the upper edge thereof into a trough **76** when the cone is rotated by means of a motor **77**, a pinion **78** and gear **79** secured to the cone **71**. An elongated ultraviolet ray lamp **80** disposed at the axis of the cone **71**, is connected to a current supply through an on and off switch **52**, or shielded by a shutter mechanism like that described in Figure 1*a*. From the trough **76** the substance is conducted through a pipe **81** to a collecting container **82**. This type of device is particularly well adapted for certain purposes because the film thickness and its rate of flow up the cone surface may be easily varied by changing the rate at which the substance is introduced into the bottom of the cone, the slope of the cone, and the speed at which the cone is rotated.

Figure 5 illustrates an apparatus comprising

a suitably supported vessel 85 having a trough 86 mounted on the upper edge thereof, into which a substance to be treated is discharged from a pipe 87. Substance from the trough is adapted to pass through perforations 88 in the bottom thereof and run down the inside surface of the vessel 85 past a source of ultraviolet light, such for example as a carbon arc lamp 89. Current may be supplied to the lamp 89 through an on and off switch 52 or a shutter mechanism similar to that shown in Figure 1a may be used. The lamp 89 may be of the open flaming arc type or as here shown be provided with a suitable shield 90 transparent to ultraviolet rays. A shield 91 opaque to ultraviolet rays is suitably mounted in the bottom of the vessel to prevent the treatment of substance after it has passed thereunder on its way to an outlet 92 and a collecting container 93.

Figure 6 illustrates a device for practicing our method comprising a source of ultraviolet rays 89 adapted to operate continuously without a shutter or switch and while substance is passed through the vessel instead of being turned on and off by the switch 52 or shutter as described in connection with Figures 1 to 5 both inclusive. It will be noted that the corresponding parts shown by Figures 5 and 6 are similarly identified except that two axially disposed carbon arc lamps 89 are shown in Figure 6 instead of only one as shown in Figure 5. In this form of device, with its continuously running lamp or lamps, a plurality of spaced opaque shields 96 are mounted in the vessel on supports 97 secured at the bottom to shield 91 and at the top to the lamp mounting 98 by means of a support 99. The top shield 96 is further supported by a web 100 connected to the inside of the vessel 85. Having pointed out the reasons for the importance of irradiating a substance with a number of properly timed intermittent treatments and then cutting off the action of the rays upon the substance to arrest the treatment thereof during the mixing period, it will be seen that the devices shown in Figures 3, 4, 5, and 6 are all adapted to operate in that manner because it is known that more or less mixing or agitation is constantly taking place in a moving stream. For instance, substance emerging from the trough 86 (Figure 6) will receive a treatment as it flows down that portion of the inside surface of the vessel 85 designated by the letter A. Thereafter the substance flows behind the first opaque shield 96 and out of the influence of the rays when it is mixed. After passing from behind the shield the substance receives a subsequent treatment as it flows over the area B between the first and second shields 96. Similarly it will receive a third, fourth and fifth treatment as it flows over the areas C, D and E respectively, before being finally removed from the action of the rays by passing under the shield 91 and thence to the outlet 92. In this case the relation between the areas A, B, C, D and E, and the areas of the shields 96 may be determined empirically according to the substance being treated, the time required for each treatment, and the amount of mixing which inherently takes place in a flowing stream, so that the mixing is substantially negligible during the relatively short time required for the substance to flow over the treating areas and relatively substantial during the time required for the substance to pass behind the shields 96. Finally, a source of active rays must be employed of such effectiveness as to impart a beneficial effect to the substance in the time required for it to pass over the areas A, B, C, D and E.

Figures 7 and 7a illustrate an irradiating device comprising a cylindrically formed cooler coil 104 comprising a plurality of spaced semi-circular sections or pipes 105 mounted in headers 106 and disposed one above the other. A trough 107, mounted upon the coil 104, receives substance to be treated from any suitable source through pipe 108. Perforations 109 are formed in the bottom of the trough 107 through which the substance flows from the trough 107 and successively over the pipe sections 105 to a trough 110 mounted on supports 111 located at the bottom of the cooler coil. A discharge opening 112 is provided in the trough 110 and adapted to conduct the substance into a collecting container 113. An active ray lamp 114 is axially disposed within the coils 105 and adapted to irradiate the substance to be treated as it traverses its course down the inside of the coils from the trough 107 to the trough 110. A plurality of shields 115, opaque to the active rays, is disposed between the lamp and the coils and adapted to shield the substance from the influence of the rays as it flows and falls behind the shields from one coil to another. A guard 116, to prevent the substance from flowing on the side of the pipes 105 remote from the light may be provided in cases where it is desired to irradiate a higher percentage of the substance in a single passage through the device.

Figure 8 illustrates the relative position of two coils or pipes 105 with respect to the guard 116 and the shield 115, and emphasizes how a substance, for example, in flowing from points F to G, is removed from the action of the light rays during that period of flow. It will be understood that the relationship between the spaces between the shields and the width of the shields themselves must be correlated to permit a treatment of the flowing substance without substantial mixing and that the flow behind the shields is of sufficient extent to permit the proper amount of mixing to take place preparatory for a subsequent treatment.

Figures 9 and 10 show a device comprising what may be described as conventional cooler coils 118, 119 and 120, arranged in vertical planes or tiers with ultraviolet ray lamps 121 disposed between the tiers. Substance to be treated is adapted to flow through openings 122 in the bottom of an upper trough 123 over the cooler coils and be collected at the bottom of each tier in troughs 124. Suitably proportioned spaced opaque shields 125 are disposed between the tiers of cooler coils and the lamps 121 so that the substance may be periodically removed from the effect of the light rays by flowing behind the shields during its descent down the coils. The middle tier of coils 119 illustrates the manner in which substance will flow simultaneously over both sides of a coil when a guard like that illustrated and described in Figure 8 is not employed and this tier will handle more substance than the outside tiers. Guards 126 may be disposed between the coils in tiers 118 and 120 and will have the effect of increasing the percentage of the substance treated similar to that of the guards 116 above described. It will be understood that while the shields in Figures 6, 7 and 9 are illustrated as being horizontally disposed at predetermined intervals, the horizontal position of itself is not essentially necessary. Suffice it to say that

it is merely important to have any type of shield adapted to permit the proper treatment of a flowing substance and shield the same during the subsequent required mixing.

Figures 11 and 12 show an irradiating device comprising a plurality of short conical planes 130, 131, 132, 133 and 134 over which a substance to be irradiated is adapted to flow through openings 135 in the bottom of a trough 136, successively past a source of ultraviolet rays 137. The length of each of these planes is such that the time required for the substance to flow from the upper edge thereof to the lower edge is sufficient for the substance to receive a proper light treatment, while the distance itself is insufficient to substantially mix the particles of the substance during such treatment. A basin 138 formed behind a shield 139 is disposed at the bottom of the cone 130 and adapted to catch the substance after it has traversed the surface thereof and received its first treatment. Any suitable mechanical agitator, 140, which in this case comprises a flexible cable 141 with paddles 142 thereon, rotated by any suitable means, not shown, is provided for agitating the substance that collects in the basin 138 and until it spills over the rear wall 143 of the basin 138 to the plane 131 where it is again presented for an active ray treatment under conditions similar to that afforded by the plane 130. Substance from the plane 131 is collected in a basin 142 for a subsequent period of agitation before descending the plane 132 for the next treatment; and so on. It will be understood that the shields 139 prevent the substance in the basin from being treated, and consequently the mixing which takes place therein is away from the influence of the light. A trough 144 is provided below the plane 134 to catch the treated substance and conduct it to any suitable container.

Figures 13 and 14 illustrate a device for irradiating a substance descending in an open free falling sheet or stream past ultraviolet ray lamps 150. This device preferably comprises a rectangular container having sides 151, a bottom 152, formed with troughs 153 extending lengthwise thereof between end pieces 154. The container is mounted upon any suitable support 155. Substance to be treated is delivered through pipes 156, to troughs 157 formed in a cover 158. The troughs 157 are similar to the trough 153 in the bottom 152 and are disposed directly above the same so that if the mixing shelves or baffles and shields, to be hereinafter described, were removed, a sheet or stream of the substance to be treated would fall from the trough 157 through the openings 159 therein, into the troughs 153 and be collected in any suitable container, not shown, as it emerges from outlets 160 provided therefor. A shelf 161, secured to one of the container sides 151 and extending therefrom to a point substantially in line with the opening 159 in the trough 157, assists, by means of a series of angularly disposed stationary agitators 162 in supporting a baffle or catch basin 163 disposed under the opening 159. A shield 164 extending both above and below the surface of the baffle 163 is formed on the front edge thereof to prevent substance which collects in the basin from spilling out towards the lamps 150. A second series of angularly disposed stationary agitators 165 are mounted on the baffle 163. It will be seen, from Figure 14, that the agitators 162 and 165 are oppositely disposed with respect to one another. The baffles 168 receive further support from the ends 154 and ribs 166 which extend from top to bottom of the container at each side thereof. A tier of similar shelves, baffles, agitators and shields are disposed at each side of the lamps 150 and because of their similarity it is deemed unnecessary to describe the same with greater particularity. From the above it will be understood that substance to be treated is permitted to freely fall through the openings 159 and receive an active ray treatment. Thereafter the substance flows away from the light and behind the shield 164, past the agitators 165 and drops from the baffle 163 through openings 167 formed at the rear edge thereof, to the shelf 161 and thereafter flows toward the light past the agitators 162 but still behind the shield 164 until it reaches the edge of the shelf 161 where it drops again in a free falling sheet through a field of active rays emanating from the lamps 150 to receive another treatment. It will be understood that substance in falling successively over the shelves 161 receives a series of short periods of exposure without substantial mixing during each treatment and that between each treatment the substance is mixed in flowing past the stationary agitators before being presented to the rays for a subsequent treatment.

Figure 15 illustrates a device adapted to treat a powdered substance in accordance with the teachings of our method of irradiation. This device comprises a hopper 170 from which substance flows to a conveyor belt 171 and is conducted under a series of spaced ultraviolet ray lamps 172 and collected in a container 173. The lamps 172 are provided with reflectors 174 adapted to concentrate the rays on a transverse area of the conveyor immediately under the light so that the substance in approaching and leaving lighted areas will not receive an appreciable treatment and thereby enable one to regulate the duration of the treating period by controlling the speed of the conveyor. A guard 175 is disposed under the conveyor belt to position the belt with relation to the reflectors 174. Agitators 176, having knockers 177 extending through openings 178 in the guard 175 are mounted on pins 179. Ratchets 180, mounted on shafts 181 are driven by the conveyor mechanism, as shown. Springs 182 are provided to urge the ends 183 of the agitators 176 against the teeth of the ratchets 180. It will be readily understood that as the ratchets are rotated the agitators will jostle and mix the powder on the conveyor while the same is away from the action of the light rays.

Figure 16 shows a modified form of device for irradiating powdered material comprising a hopper 185 from which the material is successively conveyed on belts 186, 187, 188 past ultraviolet lamps 189, 190, 191, disposed proximate the surface of said belts, respectively, and thereafter deposited in a container 192. Driving means 193 is provided for operating all of the conveyor belts at a predetermined speed so that the treatment received by the material in passing under the lamps, insofar as the conveyor speed is concerned, may be regulated and controlled. In this device substance from the belt 186 is dropped past a plurality of agitating deflectors 194, 195, 196, 197 from which it falls on to the conveyor 187. As occasion requires the deflectors 194—197 may be hinged for example, at 198 and oscillated by any suitable means to further agitate the falling substance. Similar deflectors 199 are provided to receive, agitate and conduct the substance discharged from the conveyor 187. It will be understood that in falling over the deflectors 194—197

the substance is mixed after having received an initial treatment and before receiving a subsequent treatment. In this case, like that shown in Figure 15, reflectors 200 are disposed about the lamps 189—191 to localize the substance treating area and in that respect contribute to the control of the irradiation desired.

Figure 16a illustrates the manner in which a plurality of conveyors 202, driven in opposite directions, are adapted to accomplish the necessary mixing between treatments. This form of device is advantageous when a substance may be properly mixed by merely turning it over after each treatment. Such is the effect on a stream of substance discharged from the end of one conveyor onto another conveyor moved in an opposite direction. Lamps 203 are mounted proximate each conveyor to give an effective treatment to the substance as it passes thereunder.

Figure 17 illustrates a device suitable for irradiating a substance as it flows down an inclined plane or trough 204 from a reservoir 205 to a collecting tank 206 past a plurality of spaced ultraviolet ray lamps 207. The bottom of the trough 204 is comparatively smooth at those areas 208 directly under the lamps, so that substantially no mixing takes place while the substance is exposed to the rays. Corrugated sections 209 in the trough 204 are provided in this case to mix the substance, after each treatment and before receiving a subsequent treatment.

Figures 18 and 19 illustrate the manner of irradiating a substance at rest in a vessel 212 mounted on a revolubly supported turn table 213. Gear teeth 214, formed in the periphery of the table 213 and meshing with the teeth of a mutilated pinion 215 serve as means for rotating the table in the direction of the arrow when the pinion is rotated by any suitable means, not shown. This device is constructed so that the vessel 212 dwells under an ultraviolet lamp 216 for approximately two-thirds of the time required for the pinion 215 to make one revolution and thereafter move from the position shown to the next succeeding position during the time required for the pinion 215 to make approximately a one-third revolution.

In the device here shown, twelve vessels, similar to the vessel 212, are mounted on the table 213 in position identified by the numerals 1 to 12, both inclusive, so that each vessel in turn is presented to the ultraviolet rays for treatment for a predetermined time. Agitators 217, 218, 219 and 220 are mounted in any suitable manner to be periodically positioned and rotated respectively in any vessel occupying positions 1 to 4, both inclusive, during a portion of the time the table 212 is at rest under the lamp 216, and the substance in the vessels is being treated. It will be understood that means, not shown, is provided to raise and lower the agitators in time to permit the pinion 215 to rotate the table, step-by-step, and move the vessels from one position to another. After the vessels have passed the first four, or mixing positions, the substance is permitted to come to rest, in passing successively from positions 5 to 11, both inclusive, preparatory to receiving a subsequent treatment when it occupies position number 12. In some respects, this device may be said to approach an ideal way of treating a substance. The operation of this device serves to emphasize applicants' step-by-step sequence of treating steps wherein each treatment is sufficient to activate only a portion of the substance in a given volume and thereafter thoroughly mixing the substance before it is subjected to a subsequent treatment. In this case the control of the treatment received by the substance is improved because when a substance is quiet, during the time of each exposure all particles on the surface of the substance receive substantially the same amount of treatment.

Figure 20 illustrates a device in which a substance to be irradiated is placed in a rotatably mounted vessel 223 under an ultraviolet lamp 224. An agitator 225 having paddles 226 is disposed in the vessel and adapted to stir the substance when the vessel is rotated by means of a motor 227 through a belt 228 passing around a pulley 229 secured to the vessel in any suitable manner. Current is supplied to the motor 227 through an automatic on and off controlling device 230 so that the motor will run for a predetermined period and agitate the substance and then stop for a predetermined period to permit the substance in the vessel to become quiet and thereafter receive a treatment from the lamp 224. A belt 231 disposed between the lamp and vessel, and having a plurality of perforations 232 is mounted on spools 233 driven intermittently by any suitable means, not shown, in synchronism with the periods of operation of the motor 227 and to intermittently permit rays from the lamp 224 to play upon the substance in the vessel 223 for a predetermined period of time and at a time when the substance is at rest therein, it being understood that during the period of agitation and the period required to permit the substance to come to rest in the vessel the belt is moved to a position to shut off the light from the substance.

Figure 21 shows a device in all respects similar to that shown in Figure 20 except that a circular shutter 235 having a perforation 236 is disposed between the lamp 224 and the vessel 223 to provide for intermittently playing the treating rays on the substance as the shutter is rotated in synchronism with the mixing operation of the vessel 223.

It is well known that ozone, nitrous oxide, air, and similar factors may have certain effects on some substances which are detrimental and it will be understood that our process and apparatus is such that any well known means for eliminating either the undesirable effects, or the factors themselves, may be employed.

Various modifications in the configuration, composition and disposition of the component elements which in combination constitute our apparatus improvements, as well as in the selective combination or application of the various steps in our improved process will occur to those skilled in the art, and no limitation is intended by the phraseology of the foregoing description or the exemplary illustrations set forth, or described in connection with the accompanying drawings.

What is claimed is:

1. A method of irradiating a partially opaque substance by exposures to ultraviolet rays to produce a beneficial effect therein and without imparting an undesirable effect thereto, which comprises the steps of exposing the substance to the influence of ultraviolet rays, and while maintaining said substance in the normally effective range of said rays intermittently cutting off the action of said rays upon the substance, the duration of each exposure being sufficiently short and operating conditions such that no substantial mixing takes place during such exposures, and mixing the substance between exposures.

2. The method of irradiating a partially opaque

substance by exposures to ultraviolet rays to produce a beneficial effect therein and without imparting an undesirable effect thereto, which comprises the steps of conveying the substance in a moving stream, in which more or less agitation or mixing is constantly taking place, past a source of ultraviolet rays, and while maintaining said moving stream in the normally effective range of said rays intermittently cutting off the action of such rays upon the moving stream, the duration of each exposure being sufficiently short and operating conditions such that no substantial mixing takes place during such exposure and the duration of the cutting off being sufficiently long to enable substantial mixing of the substance between exposures.

3. The method of irradiating a partially opaque substance by exposures to ultraviolet rays to produce a beneficial effect therein and without imparting an undesirable effect thereto, which comprises the steps of conveying the substance in a moving stream, in which more or less agitation or mixing is constantly taking place, past a continuous source of ultraviolet rays, and shielding off from the effect of such rays and mixing successive portions of such moving stream, the duration of each exposure being sufficiently short and operating conditions such that no substantial mixing takes place during such exposure and the duration of shielding-off being sufficiently long to enable substantial mixing of the substance between exposures.

4. The method of irradiating a partially opaque substance by exposures to ultraviolet rays to produce a beneficial effect therein and without imparting an undesirable effect thereto, which comprises the steps of conveying the substance in a moving stream or layer vertically downward by gravity over the interior surface of a hollow cylindrical member and parallel to the axis of the latter, in which stream more or less agitation or mixing is constantly taking place, past one or more continuous sources of ultraviolet rays located substantially at the axis of said member, and shielding off from exposure to such rays and mixing successive sections of said moving layer or stream, the duration of each exposure being sufficiently short and operating conditions such that no substantial mixing takes place during such exposure and the duration of shielding off being sufficiently long to enable substantial mixing of the substance between exposures.

5. The method of irradiating a partially opaque substance by exposures to ultraviolet rays to produce a beneficial effect therein and without imparting an undesirable effect thereto, which comprises the steps of conveying the substance in a moving stream of greater thickness than that through which the rays will penetrate past a continuous source of ultraviolet rays, and successively shielding off from the effects of such rays and mixing portions of such moving stream, the duration of each exposure of said substance to the ultraviolet rays being relatively short and operating conditions such that no substantial mixing takes place during such exposure and the mixing of the portions of said substance while shielded from said rays being relatively substantial.

6. The method of irradiating a partially opaque substance by exposures to ultraviolet rays to produce a beneficial effect therein and without imparting an undesirable effect thereto, which comprises the steps of conveying the substance by gravity in a vertically and downwardly moving hollow cylindrical stream past a continuous source of ultraviolet rays located substantially at the axis of said moving cylindrical stream, and shielding off from exposure to such rays and mixing successive sections of such moving stream, the duration of each exposure to such rays being relatively short and operating conditions such that no substantial mixing takes place during such exposure and the mixing of the sections of said substance while shielded from said rays being relatively substantial.

7. The method of irradiating a partially opaque substance by exposures to ultraviolet rays to produce a beneficial effect therein and without imparting an undesirable effect thereto, which comprises the steps of conveying the substance in a moving stream of greater thickness than that through which the rays will penetrate, in which stream more or less agitation or mixing is constantly taking place, past a continuous source of ultraviolet rays, shielding off successive portions of such moving stream from the effects of such rays, the duration of each exposure being sufficiently short and operating conditions such that no substantial mixing takes place during such exposure, and accelerating such mixing of the substance as it is shielded off from such rays.

8. The method of irradiating a partially opaque substance, which comprises conveying the substance in a moving stream vertically downward by gravity over the interior surface of a hollow cylindrical member and parallel to the axis of the latter, intermittently exposing the surface of portions of the substance to a beneficially effective amount of ultraviolet ray energy located substantially at the axis of said member, the duration of each exposure being sufficiently short and operating conditions such that no substantial mixing takes place during such exposures, shielding off from exposure to such rays the remaining portions of said moving stream, and mixing said remaining portions as they are shielded off from such rays.

9. The method of irradiating a partially opaque substance by exposures to ultraviolet rays to produce a beneficial effect therein and without imparting an undesirable effect thereto, which comprises the steps of conveying the substance in a moving stream, in which more or less agitation or mixing is constantly taking place, past a source of ultraviolet rays intermittently energized for predetermined exposure periods, the duration of each exposure period being sufficiently short and operating conditions such that no substantial mixing takes place during such exposure periods and the duration of the periods between exposures being sufficiently long to effect substantial mixing of the substance.

10. The method of irradiating a partially opaque substance by exposures to ultraviolet rays to produce a beneficial effect therein and without imparting an undesirable effect thereto, which comprises the steps of conveying the substance in a moving hollow stream, in which more or less agitation or mixing is constantly taking place, past a source of ultraviolet rays located substantially at the center of said moving stream and intermittently energized for predetermined exposure periods, the duration of each exposure period being sufficiently short and operating conditions such that no substantial mixing takes place during such exposure period and the duration of the periods between exposures being sufficiently long to effect substantial mixing of the substance.

11. The method of irradiating a partially opaque substance by exposures to ultraviolet rays to produce a beneficial effect therein and without imparting an undesirable effect thereto, which comprises the steps of conveying the substance in a moving stream or layer vertically downward by gravity over the interior surface of a hollow cylindrical member and parallel to the axis of the latter in which stream more or less agitation or mixing is constantly taking place, past one or more sources of ultraviolet rays located substantially at the axis of said member and intermittently energized for predetermined exposure periods, the duration of each exposure period being sufficiently short and operating conditions such that no substantial mixing takes place during such exposure period and the duration of the periods between exposures being sufficiently long to effect substantial mixing of the substance.

12. The method of irradiating a partially opaque substance by exposures to ultraviolet rays to produce a beneficial effect therein and without imparting an undesirable effect thereto, which comprises the steps of conveying the substance in a moving stream of greater thickness than that through which the rays will penetrate past a source of ultraviolet rays intermittently energized for predetermined exposure periods, and mixing the substance between exposures, the duration of each exposure period being relatively short and operating conditions such that no substantial mixing takes place during such period and the mixing of the substance between exposure periods being relatively substantial.

13. The method of irradiating a partially opaque substance by exposures to ultraviolet rays to produce a beneficial effect therein and without imparting an undesirable effect thereto, which comprises the steps of conveying the substance by gravity in a vertically and downwardly moving hollow cylindrical stream past a source of ultraviolet rays located substantially at the axis of said moving cylindrical stream and intermittently energized for predetermined exposure periods, mixing said substance between exposures the duration of each exposure period being relatively short and operating conditions such that no substantial mixing takes place during such period and the mixing of said substance being relatively substantial.

14. The method of irradiating a partially opaque substance by exposure to ultraviolet rays to produce a beneficial effect therein and without imparting an undesirable effect thereto, which comprises the steps of conveying the substance in a moving hollow cylindrical stream, in which more or less agitation or mixing is constantly taking place, past a continuous source of ultraviolet rays located substantially at the axis of said moving cylindrical stream, and shielding off from exposure to such rays and mixing successive sections of such moving stream, the duration of each exposure being sufficiently short and operating conditions such that no substantial mixing takes place during such exposure and the duration of shielding-off being sufficiently long to enable substantial mixing of the substance between exposures.

15. The method of irradiating a partially opaque substance by exposures to ultraviolet rays to produce a beneficial effect therein and without imparting an undesirable effect thereto, which comprises the steps of conveying the substance by gravity in a vertically and downwardly moving hollow cylindrical stream, in which more or less agitation or mixing is constantly taking place, past a continuous source of ultraviolet rays located substantially at the axis of said moving cylindrical stream, and shielding off from exposure to such rays and mixing sections of such moving stream, the duration of each exposure being sufficiently short and operating conditions such that no substantial mixing takes place during such exposure and the duration of shielding-off being sufficiently long to enable substantial mixing of the substance between exposures.

16. The method of irradiating a partially opaque substance by exposure to ultraviolet rays to produce a beneficial effect therein and without imparting an undesirable effect thereto, which comprises the steps of conveying the substance in a moving hollow cylindrical stream of greater thickness than that through which the rays will penetrate past a continuous source of ultraviolet rays located substantially at the axis of said moving cylindrical stream, and shielding off from exposure to such rays and mixing successive sections of such moving stream, the duration of each exposure of said substance to the rays being relatively short and operating conditions such that no substantial mixing takes place during such exposure and the mixing of the sections of said substance while shielded from said rays being relatively substantial.

17. The method of irradiating a partially opaque substance by exposures to ultraviolet rays to produce a beneficial effect therein and without imparting an undesirable effect thereto, which comprises the steps of conveying the substance in a moving hollow cylindrical stream of greater thickness than that through which the rays will penetrate, in which stream more or less agitation or mixing is constantly taking place, past a continuous source of ultraviolet rays located substantially at the axis of said moving cylindrical stream, shielding off successive sections of such moving stream from exposure to such rays, the duration of each exposure being sufficiently short and operating conditions such that no substantial mixing takes place during such exposure, and accelerating the mixing of the substance as it is shielded off from such rays.

18. The method of irradiating a partially opaque substance by exposures to ultraviolet rays to produce a beneficial effect therein and without imparting an undesirable effect thereto, which comprises the steps of conveying the substance in a moving stream or layer vertically downward by gravity over the interior surface of a hollow cylindrical member and parallel to the axis of the latter, in which stream more or less agitation or mixing is constantly taking place, past one or more continuous sources of ultraviolet rays located substantially at the axis of said member, shielding off successive sections of said moving stream or layer from exposure to such rays, the duration of each exposure being sufficiently short and operating conditions such that no substantial mixing takes place during such exposure, and accelerating the mixing of the substance as it is shielded off from such rays.

19. The method of irradiating a partially opaque substance by exposures to ultraviolet rays to produce a beneficial effect therein and without imparting an undesirable effect thereto, which comprises the steps of conveying the substance in a moving hollow cylindrical stream, in which more or less agitation or mixing is constantly taking place, past a source of ultraviolet rays located

substantially at the axis of said moving cylindrical stream and intermittently energized for predetermined exposure periods, the duration of each exposure period being sufficiently short and operating conditions such that no substantial mixing takes place during such exposure period and the duration of the periods between exposure being sufficiently long to effect substantial mixing of the substance.

20. The method of irradiating a partially opaque substance by exposures to ultraviolet rays to produce a beneficial effect therein and without imparting an undesirable effect thereto, which comprises the steps of conveying the substance by gravity in a vertically and downwardly moving hollow cylindrical stream, in which more or less agitation or mixing is constantly taking place, past a source of ultraviolet rays located substantially at the axis of said moving cylindrical stream and intermittently energized for predetermined exposure periods, the duration of each exposure period being sufficiently short and operating conditions such that no substantial mixing takes place during such exposure period and the duration of the periods between exposures being sufficiently long to effect substantial mixing of the substance.

21. The method of irradiating a partially opaque substance by exposures to ultraviolet rays to produce a beneficial effect therein and without imparting an undesirable effect thereto, which comprises the steps of conveying the substance in a moving hollow cylindrical stream of greater thickness than that through which the rays will penetrate past a source of ultraviolet rays located substantially at the axis of said moving cylindrical stream and intermittently energized for predetermined exposure periods, mixing the substance between exposures, the duration of each exposure period being relatively short and operating conditions such that no substantial mixing takes place during such exposure period and the mixing of the substance between exposure periods being relatively substantial.

22. The method of irradiating a partially opaque substance by exposure to ultraviolet rays to produce a beneficial effect therein and without imparting an undesirable effect thereto, which comprises the steps of conveying the substance in a moving hollow stream of greater thickness than that through which the rays will penetrate past a source of ultraviolet rays located substantially at the center of said moving stream and intermittently energized for predetermined exposure periods, mixing the substance between exposures, the duration of each exposure period being relatively short and operating conditions such that no substantial mixing takes place during such exposure period and the mixing of the substance between exposure periods being relatively substantial.

23. The method of irradiating a partially opaque substance by exposures to ultraviolet rays to produce a beneficial effect therein and without imparting an undesirable effect thereto which comprises the steps of conveying the substance in a moving stream of greater thickness than that through which the rays will penetrate and in which more or less mixing is constantly taking place, successively exposing the substance to ultraviolet rays after interruptions of predetermined duration to the passage of said rays to the substance from a source from which said rays emanate, the duration of each exposure being sufficiently short and operating conditions such that no substantial mixing takes place during such exposure and the duration of said interruptions being sufficiently long to effect substantial mixing of the said substance between exposures.

24. A method of irradiating milk by exposures to ultraviolet rays to produce a beneficial effect therein and without imparting an undesirable effect thereto, which comprises the steps of exposing the milk to the influence of ultraviolet rays, and while maintaining said milk in the normally effective range of said rays intermittently cutting off the action of said rays upon the milk, the duration of each exposure being sufficiently short and operating conditions such that no substantial mixing takes place during such exposures, and mixing the milk between exposures.

25. The method of irradiating milk by exposure to ultraviolet rays to produce a beneficial effect therein and without imparting an undesirable effect thereto, which comprises the steps of conveying the milk in a moving stream, in which more or less agitation or mixing is constantly taking place, past a source of ultraviolet rays, and while maintaining said moving stream in the normally effective range of said rays intermittently cutting off the action of such rays upon the moving stream, the duration of each exposure being sufficiently short and operating conditions such that no substantial mixing takes place during such exposure and the duration of the cutting off being sufficiently long to enable substantial mixing of the milk between exposures.

26. The method of irradiating milk by exposures to ultraviolet rays to produce a beneficial effect therein and without imparting an undesirable effect thereto, which comprises the steps of conveying the milk in a moving stream, in which more or less agitation or mixing is constantly taking place, past a continuous source of ultraviolet rays, and shielding off from the effect of such rays and mixing successive portions of such moving stream, the duration of each exposure being sufficiently short and operating conditions such that no substantial mixing takes place during such exposure and the duration of shielding-off being sufficiently long to enable substantial mixing of the milk between exposures.

27. The method of irradiating milk by exposures to ultraviolet rays to produce a beneficial effect therein and without imparting an undesirable effect thereto, which comprises the steps of conveying the milk in a moving stream of greater thickness than that through which the rays will penetrate past a continuous source of ultraviolet rays, and successively shielding off from the effects of such rays and mixing portions of such moving stream, the duration of each exposure of said milk to the ultraviolet rays being relatively short and operating conditions such that no substantial mixing takes place during such exposure, and the mixing of the portions of said milk while shielded from said rays being relatively substantial.

28. The method of irradiating milk by exposure to ultraviolet rays to produce a beneficial effect therein and without imparting an undesirable effect thereto, which comprises the steps of conveying the milk in a moving generally hollow stream of greater thickness than that through which the rays will penetrate past a continuous source of ultraviolet rays, and shielding off from exposure to such rays and mixing portions of such moving stream, the duration of each exposure of said milk to the rays being relatively short and operating conditions such that no substantial mixing takes place during such exposure and the mixing of the portions of said milk while

shielded from said rays being relatively substantial.

29. The method of irradiating milk by exposures to ultraviolet rays to produce a beneficial effect therein and without imparting an undesirable effect thereto which comprises the steps of conveying the milk in a moving stream of greater thickness than that through which the rays will penetrate and in which more or less mixing is constantly taking place, successively exposing the milk stream to a beneficially effective amount of ultraviolet ray energy after interruptions in the passage of said rays to the milk from the source from which said rays emanate, the duration of each exposure being sufficiently short and operating conditions such that no substantial mixing takes place during said beneficially effective exposures and the character of said interruptions being such as to effect substantial mixing of said milk while not being effectively exposed to said energy.

EDWARD C. BERNDT.
HARRY M. CREIGHTON.