(12) INTERNATIONAL APPLICATION PUBLISHED UNDER THE PATENT COOPERATION TREATY (PCT)

(19) World Intellectual Property Organization
International Bureau

(43) International Publication Date
30 January 2025 (30.01.2025)

WIPO | PCT

(10) International Publication Number
WO 2025/024489 A1

(51) International Patent Classification:
B65D 5/18 (2006.01) *B65D 21/02* (2006.01)
B65D 5/00 (2006.01)

(21) International Application Number:
PCT/US2024/039240

(22) International Filing Date:
24 July 2024 (24.07.2024)

(25) Filing Language: English

(26) Publication Language: English

(30) Priority Data:
63/528,704 25 July 2023 (25.07.2023) US

(71) Applicant: **GRAPHIC PACKAGING INTERNATIONAL, LLC** [US/US]; Law Department - 9th Floor, 1500 Riveredge Parkway, Suite 100, Atlanta, GA 30328 (US).

(72) Inventor: **KASTANEK, Raymond, S.**; 2627 Mustang Drive, Mead, CO 80542 (US).

(74) Agent: **O'DEA, Brendan, T.** et al.; Womble Bond Dickinson (US) LLP, P.O. Box 7037, Atlanta, GA 30357-0037 (US).

(81) Designated States *(unless otherwise indicated, for every kind of national protection available)*: AE, AG, AL, AM, AO, AT, AU, AZ, BA, BB, BG, BH, BN, BR, BW, BY, BZ, CA, CH, CL, CN, CO, CR, CU, CV, CZ, DE, DJ, DK, DM, DO, DZ, EC, EE, EG, ES, FI, GB, GD, GE, GH, GM, GT, HN, HR, HU, ID, IL, IN, IQ, IR, IS, IT, JM, JO, JP, KE, KG, KH, KN, KP, KR, KW, KZ, LA, LC, LK, LR, LS, LU, LY, MA, MD, MG, MK, MN, MU, MW, MX, MY, MZ, NA, NG, NI, NO, NZ, OM, PA, PE, PG, PH, PL, PT, QA, RO, RS, RU, RW, SA, SC, SD, SE, SG, SK, SL, ST, SV, SY, TH,

(54) Title: CONTAINER WITH DENESTING FEATURES

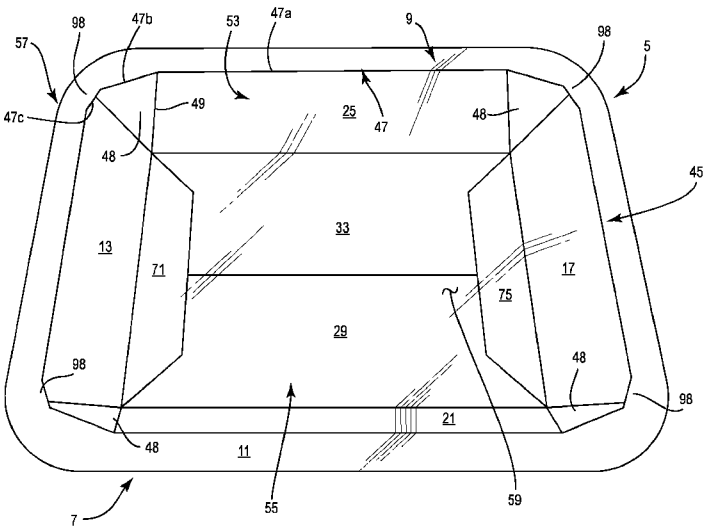

FIG. 2

(57) Abstract: According to one aspect, the disclosure is generally directed to a container for holding a food product, the container has a flange including a central panel extending at least partially around a central opening, a sidewall extending at least partially around an interior of the container, the sidewall including a plurality of panels foldably connected to the central panel, at least one comer flap foldably connected to a respective panel of the plurality of panels, the at least one comer flap obliquely arranged relative to the respective panel of the plurality of panels, and denesting features including a denesting lug extending from the at least one comer flap and outwardly from the sidewall, the denesting lug positioned for engaging a nested container positioned below the container in a stacked arrangement and for forming a denesting gap between the flange and the nested container.

WO 2025/024489 A1

[Continued on next page]

TJ, TM, TN, TR, TT, TZ, UA, UG, US, UZ, VC, VN, WS, ZA, ZM, ZW.

(84) **Designated States** *(unless otherwise indicated, for every kind of regional protection available)*: ARIPO (BW, CV, GH, GM, KE, LR, LS, MW, MZ, NA, RW, SC, SD, SL, ST, SZ, TZ, UG, ZM, ZW), Eurasian (AM, AZ, BY, KG, KZ, RU, TJ, TM), European (AL, AT, BE, BG, CH, CY, CZ, DE, DK, EE, ES, FI, FR, GB, GR, HR, HU, IE, IS, IT, LT, LU, LV, MC, ME, MK, MT, NL, NO, PL, PT, RO, RS, SE, SI, SK, SM, TR), OAPI (BF, BJ, CF, CG, CI, CM, GA, GN, GQ, GW, KM, ML, MR, NE, SN, TD, TG).

Declarations under Rule 4.17:

— *as to applicant's entitlement to apply for and be granted a patent (Rule 4.17(ii))*

— *as to the applicant's entitlement to claim the priority of the earlier application (Rule 4.17(iii))*

Published:

— *with international search report (Art. 21(3))*

— *before the expiration of the time limit for amending the claims and to be republished in the event of receipt of amendments (Rule 48.2(h))*

CONTAINER WITH DENESTING FEATURES

CROSS-REFERENCE TO RELATED APPLICATION

[0001] The present application claims the benefit of and priority to U.S. Provisional Patent Application No. 63/528,704, filed on July 25, 2023.

INCORPORATION BY REFERENCE

[0002] The disclosures of U.S. Provisional Patent Application No. 63/528,704, filed on July 25, 2023, U.S. Patent Application No. 18/140,695, filed April 28, 2023, U.S. Provisional Application 63/338,250, filed May 4, 2022, U.S. Patent Application No. 17/867,856, filed July 19, 2022, U.S. Provisional Application 63/338,250, filed May 4, 2022, U.S. Provisional Application 63/336,623 filed April 29, 2022, U.S. Patent Application No. 16/532,819 filed August 6, 2019, U.S. Patent Application No. 16/532,823 filed August 6, 2019, U.S. Provisional Patent Application No. 62/851,932, filed May 23, 2019, U.S. Provisional Patent Application No. 62/796,716, filed January 25, 2019, U.S. Provisional Patent Application No. 62/715,520, filed August 7, 2018, U.S. Patent Application No. 16/037,425, filed July 17, 2018, U.S. Provisional Patent Application No. 62/649,159, filed March 28, 2018, U.S. Provisional Patent Application No. 62/643,914, filed March 16, 2018, U.S. Patent Application No. 15/654,814, filed July 20, 2017, U.S. Provisional Patent Application No. 62/365,635, filed July 22, 2016, and U.S. Patent Application No. 12/992,131, filed February 11, 2011, PCT Patent Application No. PCT/GB/09/50506, filed May 13, 2009, are hereby incorporated by reference for all purposes as if presented herein in their entirety.

BACKGROUND OF THE DISCLOSURE

[0003] The present disclosure relates to blanks, containers, trays, constructs, and various features and methods for forming a container from a blank. More specifically, the disclosure is generally directed to a stackable container and/or a stack of containers having denesting features.

SUMMARY OF THE DISCLOSURE

[0004] According to one aspect, the disclosure is generally directed to a container for holding a food product, the container comprising a flange comprising a central panel extending at least partially around a central opening, a sidewall extending at least partially around an interior of the container, the sidewall comprising a plurality of panels foldably connected to the central panel, at least one corner flap foldably connected to a respective panel of the plurality of panels, the at least one corner flap obliquely arranged relative to the respective panel of the plurality of panels, and

denesting features comprising a denesting lug extending from the at least one corner flap and outwardly from the sidewall, the denesting lug positioned for engaging a nested container positioned below the container in a stacked arrangement and for forming a denesting gap between the flange and the nested container.

[0005] According to another aspect, the disclosure is generally directed to a blank for forming a container for holding a food product, the blank comprising a central panel extending at least partially around a central opening for at least partially forming a flange of the container formed from the blank, a plurality of panels foldably connected to the central panel for at least partially forming a sidewall extending at least partially around an interior of the container formed from the blank, at least one corner flap foldably connected to a respective panel of the plurality of panels, the at least one corner flap for being obliquely arranged relative to the respective panel of the plurality of panels when the container is formed from the blank, and denesting features comprising a denesting lug extending from the at least one corner flap, the denesting lug for being positioned extending outwardly from the sidewall for engaging a nested container positioned below the container formed from the blank in a stacked arrangement and for forming a denesting gap between the flange and the nested container when the container is formed from the blank.

[0006] According to another aspect, the disclosure is generally directed to a method of forming a container for holding a food product, the container comprising obtaining a blank comprising a central panel extending at least partially around a central opening, a plurality of panels foldably connected to the central panel, the blank further comprising at least one corner flap foldably connected to a respective panel of the plurality of panels, and denesting features comprising a denesting lug extending from the at least one corner flap, positioning the central panel to at least partially form a flange, positioning the plurality of panels extending at least partially around an interior of the container, and positioning the at least one corner flap extending outwardly from the sidewall for engaging a nested container positioned below the container in a stacked arrangement and for forming a denesting gap between the flange and the nested container.

[0007] According to another aspect, the disclosure is generally directed to a stacked arrangement of containers for holding a food product, the stacked arrangement comprising a lower nested container at least partially receiving an upper nested container, the upper nested container comprising a flange comprising a central panel extending at least partially around a central opening, a sidewall extending at least partially around an interior of the container, the sidewall comprising a plurality of panels foldably connected to the central panel, at least one corner flap foldably connected to a respective panel of the plurality of panels, the at least one corner flap obliquely arranged relative to the respective panel of the plurality of panels; and denesting features comprising a denesting lug extending from the at least one corner flap and outwardly from

the sidewall, the denesting lug positioned for engaging the lower nested container positioned below the upper nested container in a stacked arrangement and for forming a denesting gap between the flange and the lower nested container.

[0008] Those skilled in the art will appreciate the above stated advantages and other advantages and benefits of various additional embodiments reading the following detailed description of the embodiments with reference to the below-listed drawing figures.

BRIEF DESCRIPTION OF THE DRAWINGS

[0009] According to common practice, the various features of the drawings discussed below are not necessarily drawn to scale. Dimensions of various features and elements in the drawings may be expanded or reduced to more clearly illustrate the embodiments of the disclosure.

[0010] Fig. 1 is a plan view of a blank used for forming a container according to a first exemplary embodiment of the disclosure.

[0011] Figs. 1A and 1B are plan views of a flat construct formed from the blank of Fig. 1 according to the first exemplary embodiment of the disclosure.

[0012] Fig. 2 is a top perspective view of the container formed from the construct of Figs. 1A and 1B and a liner according to the first exemplary embodiment of the disclosure.

[0013] Fig. 3 is a detail view of a corner of the container of Fig. 2.

[0014] Fig. 4 is a perspective view of stacked arrangements of the containers according to the first exemplary embodiment of the disclosure.

[0015] Fig. 5 is a side elevation view of stacked arrangements of the containers according to the first exemplary embodiment of the disclosure.

[0016] Fig. 6 is a detail view of a portion of the stacked arrangement of containers of Fig. 5.

[0017] Fig. 7 is a plan view of a blank used for forming a container according to a second exemplary embodiment of the disclosure.

[0018] Fig. 8 is a top perspective view of a stacked arrangement of containers formed from the blank of Fig. 7 according to the second exemplary embodiment of the disclosure.

[0019] Fig. 9 is a detail view of respective corners of the stack of containers of Fig. 8.

[0020] Fig. 10 is a bottom perspective view of the container of Fig. 8.

[0021] Corresponding parts are designated by corresponding reference numbers throughout the drawings.

DETAILED DESCRIPTION OF THE EXEMPLARY EMBODIMENTS

[0022] The present disclosure relates generally to various aspects of containers, constructs, trays, materials, packages, elements, and articles, and methods of making such containers, constructs, trays, materials, packages, elements, and articles. Although several different aspects, implementations, and embodiments are disclosed, numerous interrelationships between, combinations thereof, and modifications of the various aspects, implementations, and embodiments are contemplated hereby. In one illustrated embodiment, the present disclosure relates to forming a container or tray for holding food items or various other articles. However, in other embodiments, the container or tray can be used to form other non-food containing articles and/or may be used for heating or cooking.

[0023] Fig. 1 illustrates a blank 3 that is used to form a base layer 7 of a container 5 (Figs. 2-6), wherein the container 5 includes a liner 9 (schematically shown in Fig. 2) attached to the base layer 7 according to embodiments of the disclosure. In one embodiment, the base layer comprises paperboard (e.g., solid bleached sulphate folding boxboard), or other suitable material that can be recyclable and/or suitable for use in an oven (not shown), and the liner 9 comprises a plastic layer such as polyethylene, a polyethylene terephthalate (PET) material, or any other thermoplastic material, or a bioplastic, such as vegetable oil or starch-based plastics.

[0024] In an exemplary embodiment, the liner 9 comprises polyethylene that can be softened and fused to the base layer 7. In an alternative embodiment, the liner 9 can comprise PET or a similar material that is at least partially attached to the base layer 7 by a heat seal layer (e.g., a thermoformable sealant grade transparent polyester packaging film, such as Mylar® XMPOL12 available from DuPont Teijin Films U.S. Limited Partnership of Hopewell, Virginia, or any suitable thermoformable sealant or adhesive, any suitable heat or pressure activated adhesive, or any other suitable material), wherein a PET liner can be more suitable for uses that require heating of the container in an oven. In the illustrated embodiments, the liner 9 is at least partially attached to the base layer 7 and is in contact with the food product held in the container 5 (e.g., during heating).

[0025] In exemplary embodiments, after heating the food product, the base layer 7 and the liner 9 can be separated to allow both the base layer 7 and the liner 9 to be recycled separately (e.g., see the incorporated-by-reference patent applications).

[0026] The blank 3 can be formed from a single ply of material, such as but not limited to paperboard, cardboard, paper, a polymeric sheet, and/or a laminate that includes more than one layer. In one embodiment, the blank 3 can include a microwave interactive layer (not shown) such as is common in MicroRite® containers available from Graphic Packaging International of Atlanta, GA. The microwave interactive layer can be commonly referred to as, or can have as one of its components, a susceptor, a foil, a microwave shield, or any other term or component that refers to a layer of material suitable for shielding microwave energy and/or causing heating in a microwave oven.

[0027] As shown in Fig. 1, the blank 3 has a longitudinal direction L1 and a lateral direction L2. In the illustrated embodiment, the blank 3 has a central panel 11, a first end panel 13 foldably connected to the central panel 11 at a longitudinal fold line 15, a second end panel 17 foldably connected to the central panel 11 at a longitudinal fold line 19, a first side panel 21 foldably connected to the central panel 11 at a lateral fold line 23, and a second side panel 25 foldably connected to the central panel 11 at a lateral fold line 27.

[0028] In the illustrated embodiment, the blank 3 further comprises a first bottom panel 29 foldably connected to the first side panel 21 along a lateral fold line 31, a second bottom panel 33 foldably connected to the second side panel 25 along a lateral fold line 35, a third bottom panel 71 foldably connected to the first end panel 13 along a longitudinal fold line 73, and a fourth bottom panel 75 foldably connected to the second end panel 17 along a longitudinal fold line 77.

[0029] As shown in Fig. 1, the side panels 21, 25 include respective attachment portions 37, 39 at least partially defined by respective fold lines 41, 43 in the respective side panels 21, 25. In the illustrated embodiment, the end panels 13, 17 are foldably connected to the central panel 11 so that the end panels 13, 17 and the third and fourth bottom panels 71, 75 extend into a central cutout or opening 45 so that edges of the central panel 11, the end panels 13, 17, and the third and fourth bottom panels 71, 75 extend at least partially around the cutout 45 in the blank 3.

[0030] In one embodiment, the central panel 11 includes two interior free edges 47 at least partially defining the cutout 45, each having a respective central segment or portion 47a extending in the lateral direction L2, two corner segments or portions 47b extending obliquely from the respective ends of the respective central portion 47a, and two end segments or portions 47c extending obliquely from the respective ends of the corner portions 47b to the respective ends of the longitudinal fold lines 15, 19. In embodiments, at least a portion of the end portions 47c can be defined by respective cut lines where the end panels 13, 17 are separable from the central panel 11 adjacent the ends of the longitudinal fold lines 15, 19.

[0031] As shown in Fig. 1, the side panels 21, 25 are foldably connected to the central panel 11 along fold lines 23, 27 that are spaced apart from the cutout 45 and the edges 47. In the illustrated embodiment, two corner flaps 48 are foldably connected to each of the side panels 21, 25 along respective oblique fold lines 49. In embodiments, the corner flaps 48 can be considered to be parts of the respective side panels 21, 25.

[0032] As shown in Fig. 1, the blank 3 can include denesting features including a spacer or lug or shoulder 90 extending outwardly from an edge of each of the corner flaps 48 proximate the respective attachment portions 37, 39. In the illustrated embodiments, each shoulder 90 can include an engagement edge 91 extending from an oblique edge 94a of the respective corner flap 48 and an end edge 93 extending from the engagement edge 91 to a top edge 94b of the respective corner flap 48. In some embodiments, the engagement edge 91 can include at least one straight segment intersecting at least one oblique segment.

[0033] As shown in Fig. 1, the top edges 94b of the corner flaps 48 are spaced apart from the respective attachment portions 37, 39 of the side panels 21, 25. Alternatively, the corner flaps 48 can be separable from the respective attachment portions 37, 39 along respective cuts or tear lines or the corner flaps 48 could be foldably connected to the respective attachment portions 37, 39 along respective fold lines. In embodiments, each of the engagement edges 91 can form a flange engagement edge with a length D1 (Fig. 1) from the respective oblique edges 94a of the corner flaps 48.

[0034] As shown in Fig. 1, the denesting features further can include a plurality of landing areas 98 of the central panel 11 (e.g., four landing areas), extending along the respective end segments 47c of the edges 47. In embodiments, the central panel 11 is wider at the landing areas 98 (e.g., adjacent the ends of the longitudinal fold lines 15, 19) to provide larger areas for receiving (engaging) respective shoulders 90 of another container (e.g., a nested container) stacked on top of the container 5 as described in more detail below. The denesting features, including the shoulders 90 and the landing areas 98, could be otherwise shaped, arranged, positioned, and/or configured without departing from the disclosure.

[0035] As shown in Fig. 1, each of the first and second bottom panels 29, 33 has two longitudinal edges extending from a lateral edge and two oblique edges extending from the respective longitudinal edges and each of the third and fourth bottom panels 71, 75 has two oblique edges extending from a longitudinal edge.

[0036] In exemplary embodiments, the bottom panels 29, 33, 71, 75 are sized and configured so that the lateral edges of the first and second bottom panels 29, 33 abut one another, the longitudinal edges of the third and fourth bottom panels 71, 75 abut the longitudinal edges of the first and second bottom panels 29, 33, and the oblique edges of the third and fourth bottom panels 71, 75 abut the oblique edges of the first and second bottom panels 29, 33 when the container 5 is formed and the bottom panels 29, 33, 71, 75 are arranged to form a bottom wall. In embodiments, this configuration of the bottom panels can result in a bottom wall that is at least partially flat (e.g., all the bottom panels extending in one plane). In alternative embodiments, one or more of the bottom panels can be configured to be in an overlapping relationship with one or more of the other bottom panels.

[0037] The blank 3 could be otherwise shaped, arranged, and/or configured without departing from the disclosure. In addition, any of the central panel 11, the end panels 13, 17, the side panels 21, 25, the bottom panels 29, 33, 71, 75, and/or the corner flaps 48 could be omitted or could be otherwise shaped, arranged, positioned, and/or configured without departing from the disclosure. For example, the blank 3 could have any suitable number of panels and any suitable shape.

[0038] As shown in Figs. 1A and 1B, the blank 3 can be formed into a flat construct 51 (e.g., a folded and glued blank), which is prepared to be formed into the base portion 7 of the container 5 as described in more detail below. The construct 51 can be formed by applying adhesive (e.g., in the form of glue strips) to the attachment portions 37, 39 of the side panels 21, 25 and/or to the central panel 11 and folding the side panels 21, 25 along the respective fold lines 23, 27 over the central panel 11.

[0039] The attachment portions 37, 39 can be folded into face-to-face contact with an undersurface 52 of the central panel 11 so that the attachment portions 37, 39 are adhered to the central panel 11 (Fig. 1A). In the illustrated embodiment, the attachment portions 37, 39 extend from the respective fold lines 23, 27 to the respective edges 47 of the central panel 11. As shown in Figs. 1A and 1B, the first and second bottom panels 29, 33 can at least partially overlap one another in the construct 51, and the side panels 21, 25 and the first and second bottom panels 29, 33 can be in an at least partially overlapping relationship with the end panels 13, 17 and the third and fourth bottom panels 71, 75 in the construct 51. The construct 51 could be otherwise formed without departing from the disclosure.

[0040] As shown in Figs. 1A and 1B, the construct 51 can lie substantially flat for compact storage and/or transportation while being in a configuration that is prepared to form the container 5. In the illustrated embodiment, the container 5 can be formed from the flat construct 51 by folding the end panel 13, 17 downwardly relative to the central panel 11 along the respective fold

lines 15, 19 and folding side portions of the side panels 21, 25 downwardly relative to the central panel 11 and the attachment portions 37, 39 along the respective fold lines 41, 43.

[0041] As shown in Figs. 2 and 3, the end panels 13, 17 and the side portions of the side panels 21, 25 extend generally downwardly from the central panel 11 to at least partially form a sidewall 53 extending around a perimeter of a bottom wall 55 formed from the bottom panels 29, 33, 71, 75 that are foldably connected to the respective panels 21, 25, 13, 17 that form the respective sidewall 53. In the illustrated embodiment, the corner flaps 48 cooperate with the side portions of the side panels 21, 25 and the end panels 13, 17 to form the sidewall 53. In embodiments, the corner flaps 48 are folded to extend between the end panels 13, 17 and the side portions of the side panels 21, 25 (e.g., with the oblique edge 94a of each corner flap 48 abutting a respective edge of the respective end panels 13, 17). In the illustrated embodiments, the end panels 13, 17, the side panels 21, 25, and the corner flaps 48 can extend obliquely (e.g., upwardly and outwardly) from the bottom wall 55.

[0042] As shown in Figs. 2-6, the bottom panels 29, 33, 71, 75 can be folded along the respective fold lines 31, 35, 73, 77 with respect to the respective side panels 29, 33 and end panels 13, 17 to form the bottom wall 55 (e.g., while the sidewall 53 is formed). In the illustrated embodiments, the corner flaps 48 can be oblique with respect to the end panels 13, 17 and the side panels 21, 25. In exemplary embodiments, the edges of the bottom panels 29, 33, 71, 75 can be brought together for example such that the lateral edges of the first and second bottom panels 29, 33 abut one another, the longitudinal edges of the third and fourth bottom panels 71, 75 abut the longitudinal edges of the first and second bottom panels 29, 33, and the oblique edges of the third and fourth bottom panels 71, 75 abut the oblique edges of the first and second bottom panels 29, 33 so that the bottom panels 29, 33, 71, 75 are planar or at least partially planar and the bottom wall 55 is flat or at least partially flat.

[0043] In the illustrated embodiments, the central panel 11 and the attachment portions 37, 39 can form a flange 57 of the container 5. In exemplary embodiments, the attachment portions 37, 39 glued to the underside of the central panel 11 can strengthen the flange 57 and strengthen and increase rigidity of the container 5. The sidewall 53, the bottom wall 55, and/or the flange 57 could be omitted or could be otherwise shaped, arranged, positioned, and/or configured without departing from the disclosure. For example, one or more of the bottom panels can be configured to be in an overlapping relationship with one or more of the other bottom panels. Also, the container 5 can have one or more reinforcing features that can reinforce the flange 57 and/or other portions of the container without departing from the disclosure.

[0044] As schematically shown in Fig. 2, the container 5 further includes the liner 9 attached to the inner surface of the base layer 7 formed from the blank 3. In embodiments, the liner 9 (e.g., for a polyethylene liner) can be separably attached to the base layer 7 (e.g., by heating the liner and fusing it to the base layer). Alternatively, the liner 9 can be attached to the base layer 7 by a heat seal layer (e.g., for a PET liner), an adhesive, or other suitable features. The liner 9 can extend over the sidewall 53, the bottom wall 55, and the flange 57. In embodiments, the liner 9 can extend beyond the flange 57, the edges of the liner 9 and the flange 57 can be aligned, and/or the liner can be spaced inwardly from the edge of the flange 57. In the illustrated embodiments, the liner 9 can be attached to at least a portion of each of the bottom panels 29, 33, 71, 75, the end panels 13, 17, the side panels 21, 25, the corner flaps 48, and the central panel 11. In exemplary embodiments, the liner 9 can at least partially retain the base layer 7 in the shape of the container 5 (e.g., can help retain the end panels 13, 17, the side panels 21, 25, and the corner flaps 48 in their respective positions in the sidewall 53 and/or can help retain the bottom panels 29, 33, 71, 75 in position in the bottom wall 55, e.g., with abutting edges). The container 5, including the liner 9 and/or the base layer 7, could be otherwise shaped, arranged, positioned, and/or configured without departing from the disclosure.

[0045] In embodiments, heat and pressure used to apply the liner 9 to the construct can cause the flat construct 51 (Figs. 1A and 1B) to be erected into the base layer 7 of the container 5 (Figs. 2-6). For example, the end panels 13, 17 and the side portions of the side panels 21, 25 can fold downwardly with respect to the central panel 11 to form the sidewall 53 and the bottom panels 29, 33, 71, 75 can move into position to form the bottom wall 55, such as by moving the end panels 13, 17, the side portions of the side panels 21, 25, the corner flaps 48, and the bottom panels 29, 33, 71, 75 against the interior of a mold (not shown) or other suitable feature. In embodiments, the sidewall 53 and the bottom wall 55 can extend along an interior 59 of the base layer 7. The liner 9 can be forced into the interior 59 into contact with the end panels 15, 17, the side panels 21, 25, the corner flaps 48, the bottom panels 29, 33, 71, 75, and the central panel 11 (the flange 57) so that the liner 9 is at least partially adhered to the panels 15, 17, 21, 25, 29, 33, 11 and the corner flaps 48 and so that the liner 9 is combined with the base layer 7 to form the container 5.

[0046] In embodiments, the container 5 can be formed similarly to the formation of the containers as shown and described in the incorporated-by-reference applications. The container 5 could be otherwise formed without departing from the disclosure. For example, the container 5 could be formed from the construct 51 prior to applying the liner 9.

[0047] In embodiments, a lid (not shown) can comprise packaging film that is a thin plastic layer used to preserve and protect a food item contained in the tray and can be removably attached to the flange 57 of the container 5. Any plastic film, such as polyethylene, polypropylene, polyethylene

terephthalate, polyvinylchloride, polyamide, and ethylene vinyl alcohol, or other suitable material, can be used for forming the lid that is sealed against the sealing surface of the flange 57. Further, adhesives can be used between the lid and the sealing surface of the flange 57 without departing from the disclosure. In embodiments, the sealing surface of the flange 57 comprises an upper surface of the central panel 11, which is generally free from joints, creases, folds, pleats, edges, and other features that can make sealing a lidding film to the flange more difficult (e.g., that can reduce the smoothness of the flange).

[0048] For example, the flange 57 can comprise one piece of board (e.g., the central panel 11) that has a top surface that extends around the perimeter of the container. Accordingly, the upper surface of the central panel 11 in the container 5 of the illustrated embodiment can provide a superior sealing surface than a container that has features such as pleats or joints on its upper flange surface. In embodiments, the arrangement of the end panels 13, 17, which are foldably connected along the cutout 45 of the central panel 11, and the side panels 21, 25, which are foldably connected along the outer edges of the central panel 11 and folded under the central panel, can allow the upper surface of the central panel 11 to be flat and/or smooth for forming the sealing surface. In embodiments, the smooth upper surface of the central panel 11 also can facilitate better attachment between the base layer 7 and the liner 9 at the upper surface of the flange 57.

[0049] As shown in Figs. 5 and 6, the container 5 (broadly, "lower nested container" or "first upper nested container" or "second upper nested container") can be arranged with other containers 5 (broadly, "lower nested container" or "first upper nested container" or "second upper nested container") or another similar container in a nested or stacked arrangement 95, wherein the sidewall 53 and the bottom wall 55 of each container 5 is positioned at least partially in the interior 59 of a lower, nested container 5. In the illustrated embodiment, the shoulders 90 can extend downwardly from the flange 57 and outwardly from the sidewall 53 of each container 5 (e.g., from the respective corner flap 48) to form the denesting features. In such an arrangement, the shoulders 90 extend outwardly from the sidewall 53 from each of the corner flaps 48 adjacent the respective end panels 13, 17 the distance D1 and extend downwardly from the flange 57 a distance D2 (Fig. 5).

[0050] Accordingly, when the end panels 13, 17 of an upper container 5 are positioned adjacent the interior surfaces of the respective end panels 13, 17 of a lower nested container 5, the lateral edges 91 of the shoulders 90 extend outwardly from the sidewall 53 of the upper container 5 over the flange 57 of the lower container 5 and can rest on or contact the respective landing areas 98 of the flange 57 of the lower container 5. In the illustrated embodiment, the shoulders 90 can support the upper container 5 at the lateral edges 91 relative to the lower container 5 (e.g., the lateral edges

91 of the upper container can engage the upper surface of the central panel 11 at the landing areas 98 of the lower container) and can prevent the upper container 5 from moving farther into the interior 59 of the lower nested container 5. In some embodiments, the top edges 94b of the respective corner flaps 48 can at least partially contact and/or support a portion of the flange 57 of a vertically-adjacent container 5.

[0051] As shown in Figs. 5 and 6, the shoulders 90 can form denesting gaps 97 between the flanges 57 of adjacent containers 5 in the stacked arrangement 95. In one embodiment, the height of each gap 97 can be equal to (e.g., approximately or substantially equal to) the distance D2.

[0052] In embodiments, the shoulders 90 can extend in the plane of the respective corner flaps 48, oblique with respect to the end panels 13, 17 and the side panels 21, 25, so that the shoulders 90 at each end of the container 5 extend outwardly and at least partially toward one another. In this regard, the side panels 21, 25 can at least partially define a respective plane and the respective corner flaps 48 and shoulders 90 extending therefrom can diverge from the respective plan.

[0053] For example, the oblique shoulders 90 can extend outwardly from the sidewall 53 a shorter distance than a similar shoulder extending in an orthogonal direction (e.g., if the corner flaps 48 were omitted and the shoulders 90 extended outwardly from the ends of the side panels 21, 25 in the plane of the side panels 21, 25). However, the landing areas 98 can extend along the end portions 47c of the edges 47 toward the interior 59 of the container 5 relative to the sidewall 53 (Fig. 3) to provide a larger engagement area for the shoulders 90 of another container 5 to contact when the containers are stacked than if the edges 47 continued in the direction of the corner portions 47b along the corner flaps 48 to the fold lines 15, 19.

[0054] In exemplary embodiments, the landing areas 98 can make stacking the containers 5 easier so that the shoulders more consistently engage the flanges 57 of respectively lower containers. In embodiments, the shoulders 90 could be positioned to extend farther outwardly from the sidewall 53 instead of or in addition to the use of the larger landing areas 98; however, such extended shoulders 90 can interfere with processing and/or handling equipment and can interfere with the handling of the blanks 3 and/or the constructs 51 and/or can interfere with the forming of the constructs 51 and/or the containers 5 in some embodiments. In embodiments, extending the shoulders 90 to compensate for the angle of the shoulders and the corner flaps 48 could require modifying sealing and lining tools and/or other apparatus to accommodate the larger shoulders, while extending the landing areas 98 towards the interior of the container 5 relative to the sidewall 53 can help compensate for the angle of the shoulders while allowing for the shoulders to be sized for use with existing tools. The stacked arrangement 95 and/or any of the shoulders 90 could be otherwise shaped, arranged, positioned, and/or configured without departing from the disclosure.

[0055] In exemplary embodiments, the denesting gaps 97 formed by the shoulders 90 in the stacked arrangement can facilitate separation of the containers 5 from the stacked arrangement 95 (e.g., denesting the containers 5). For example, if the shoulders 90 were omitted, the containers 5 could move farther into the interior 59 of the respectively lower containers 5 so that the flanges 57 of adjacent containers 5 can be positioned adjacent one another (e.g., the adjacent flanges 57 could be spaced by a small distance or in contact or engagement with one another). Without the denesting gap 97 formed by the shoulders 90, it can be more difficult to grasp the flanges 57 of the stacked containers 5 and pull the containers apart and/or it can be more difficult for a denesting apparatus (not shown) to move between two flanges 57 for separating the containers 5. In the illustrated embodiment, the denesting gap 97 can allow a user to more easily grasp the flange 57 of one of the containers 5 (e.g., the topmost container) and to pull the container 5 off the stacked arrangement 95 by its flange 57. Alternatively or in addition, the denesting gap 97 can provide space for a portion of a denesting device (not shown), such as a screw-type denesting device or other suitable device, to move between the flanges 57 of two adjacent containers 5 in the stacked arrangement 95 so that the denesting device may push the containers 5 apart at their flanges 57.

[0056] Turning to Fig. 7, a plan view of a blank 203 for forming a base layer 207 of a container 205 (Figs. 8-10) according to a second embodiment of the disclosure is illustrated. The blank 203 and the container 205 formed therefrom can have one or more features that are the same or similar to those described above with respect to the blank 3 and the container 5, and like or similar features are designated with like or similar reference numerals.

[0057] As shown in Fig. 7, the blank 203 has a longitudinal direction L1 and a lateral direction L2 and the side panels 21, 25 can have attachment portions 237, 239 with extensions 301a, 301b, 303a, 303b extending beyond the edges of the side panels 21, 25 away from the central panel (e.g., in the longitudinal direction L1). As shown in Fig. 7, each of the extensions 301a, 301b, 303a, 303b can include a respective end reinforcement flap 305a, 305b, 307a, 307b foldably connected to the respective extension along a respective longitudinal fold line 309a, 309b, 311a, 311b for reinforcing the end panels 13, 17 when the container 205 is formed from the blank 203.

[0058] In the exemplary embodiments, the end reinforcement flaps 305a, 305b, 307a, 307b can be separable from at least the respective bottom panels 29, 33 and corner flaps 48 along respective lines of weakening 313 (e.g., cuts, slits, tear lines and/or other suitable features). In some embodiments, each of the end reinforcement flaps 305a, 305b, 307a, 307b can be at least partially connected to the respective bottom panels 29, 33 and/or corner flaps 48 by one or more nicks (not shown) or other suitable features, which can help keep the blank 203 flat until the nicks are broken to separate the end reinforcement flaps 305a, 305b, 307a, 307b from the respective bottom panels

29, 33 and/or corner flaps during formation of the base layer 207 of the container 205 from the blank 203.

[0059] In the illustrated embodiments, the corner flaps 48 and the shoulders 90 can be defined or at least partially defined by the respective lines of weakening 313 along the respective end reinforcement flaps 305a, 305b, 307a, 307b and extensions 301a, 301b, 303a, 303b. Alternatively, at least a portion of the bottom panels 29, 33, the corner flaps 48, and/or the shoulders 90 could be spaced apart from the extensions 301a, 301b, 303a, 303b and the end reinforcement flaps 305a, 305b, 307a, 307b.

[0060] As shown in Fig. 7, each of the extensions 301a, 301b, 303a, 303b can include a respective opening or slot 315 aligned with the respective fold lines 309a, 309b, 311a, 311b, which slots 315 can help prevent bunching of material as the end reinforcement flaps are folded in the erected container 205 as described in more detail below. The blank 203 could be otherwise shaped, arranged, positioned, and/or configured without departing from the disclosure.

[0061] As shown in Figs. 8-10, when the container 205 is formed from the blank 203, the end panels 13, 17 and the side panels 21, 25 extend generally downwardly from the central panel 11 to at least partially form a sidewall 253 extending around a perimeter of the bottom wall 55 formed from the bottom panels 29, 33, 71, 75.

[0062] The attachment portions 237, 239 with their extensions 301a, 301b, 303a, 303b can be folded under the central panel 11 when the side panels 21, 23 are positioned to form the sidewall 253. In the illustrated embodiment, the attachment portions 237, 239 and the extensions 301a, 301b, 303a, 303b can be glued to the underside of the central panel 11 so that the central panel 11, the attachment portions 237, 239, and portions of the extensions 301a, 301b, 303a, 303b cooperate to form a flange 257 of the container 205. In the illustrated embodiment, the attachment portions 237, 239 and the extensions 301a, 301b, 303a, 303b can reinforce the central panel 11 along the side panels 21, 23 and the end panels 13, 17.

[0063] The upper surface of the central panel 11 forms the upper surface of the flange 257 so that the upper surface of the flange 257 lacks joints, pleats, folds, creases, edges, and/or other features that can reduce the smoothness of the flange. This can help the flange 257 to provide a better surface for attaching the liner 9 to the base and/or for attaching a lid film to the flange 257. The liner can be similar or identical to the liner 9 of the first embodiment. In embodiments, a lid film or other cover for enclosing the interior 59 of the container 205 can form a tighter seal with the flange 257 than if the flange included pleats, joints, folds, creases, edges, and/or other features that can interfere with the formation of a seal between the cover and the flange.

[0064] The end reinforcement flaps 305a, 307a of the extensions 301a, 303a can be placed in face-to-face contact with the exterior surface of the first end panel 13 and the end reinforcement flaps 305b, 307b of the extensions 301b, 303b can be placed in face-to-face contact with the exterior surface of the second end panel 17. In embodiments, the end reinforcement flaps 305a, 305b, 307a, 307b can be glued or otherwise attached to the outer surfaces of the respective end panels 13, 17 and can reinforce the respective end panels 13, 17. Accordingly, the sidewall 253 of the container 205 can be strengthened by the end reinforcement flaps 305a, 305b, 307a, 307b extending along the respective end panels 13, 17 and can strengthen and increase rigidity of the container 205.

[0065] In embodiments, the extensions 301a, 303a, including the end reinforcement flaps 305a, 307a, can extend toward one another along the flange 257 and the sidewall 253 and the extensions 301b, 303b, including the end reinforcement flaps 305b, 307b, can extend toward one another along the flange 257 and the sidewall 253. In the illustrated embodiments, the distal ends of the extensions 301a, 303a can be proximate to one another and the distal ends of the extensions 301b, 303b can be proximate to one another so that there is a gap between the distal ends. In other embodiments, the distal ends can be brought together (e.g., can be proximate to one another and/or can abut/contact one another).

[0066] In exemplary embodiments, the extensions 301a, 301b, 303a, 303b and the end reinforcement flaps 305a, 305b, 307a, 307b can be glued to the underside of the central panel 11 and to the outer surface of the respective end panels 13, 17 when the blank 203 is formed into a flat construct (e.g., similar to the construct 51 of Figs. 1A and 1B). In embodiments, the fold lines 309a, 311a, 309b, 311b of the respective extensions 301a, 303a, 301b, 303b can be on the inside of the folds when the end panels 13, 17 are folded downwardly from the central panel 11 along the respective fold lines 15, 19. The slots 315 in the extensions 301a, 301b, 303a, 303b can provide clearance to help avoid bunching of material on the inside of the folds when the end panels are folded downwardly.

[0067] The sidewall 253, the bottom wall 55, and/or the flange 257 could be omitted or could be otherwise shaped, arranged, positioned, and/or configured without departing from the disclosure. Further, the flange 257 can comprise one piece of board (e.g., the central panel 11) that has a top surface that extends around the perimeter of the container. The attachment portions 237, 239 and their extensions 301a, 301b, 303a, 303b glued to the central panel 11 strengthen the flange 257 and strengthen and increase rigidity of the container 205. In alternative embodiments, the attachment portions 237, 239 could be omitted without departing from the disclosure.

[0068] The container 205 could be made by the similar or same methods, process, systems, machines, etc. of any of the containers disclosed herein.

[0069] Any of the features of the various embodiments of the disclosure can be combined with, replaced by, or otherwise configured with other features of other embodiments of the disclosure without departing from the scope of this disclosure.

[0070] Optionally, one or more portions of the blank or other constructs described herein or contemplated hereby may be coated with varnish, clay, or other materials, either alone or in combination. The coating may then be printed over with product advertising or other information or images. The blanks or other constructs also may be selectively coated and/or printed so that less than the entire surface area of the blank or substantially the entire surface area of the blank may be coated and/or printed.

[0071] Any of the blanks, containers, or other constructs of this disclosure may optionally include one or more features that alter the effect of microwave energy during the heating or cooking of a food item that is associated with the tray or other construct. For example, the blank, tray, container, or other construct may be formed at least partially from one or more microwave energy interactive elements (hereinafter sometimes referred to as "microwave interactive elements") that promote heating, browning and/or crisping of a particular area of the food item, shield a particular area of the food item from microwave energy to prevent overcooking thereof, or transmit microwave energy towards or away from a particular area of the food item. Each microwave interactive element comprises one or more microwave energy interactive materials or segments arranged in a particular configuration to absorb microwave energy, transmit microwave energy, reflect microwave energy, or direct microwave energy, as needed or desired for a particular construct and food item.

[0072] In the case of a susceptor or shield, the microwave energy interactive material may comprise an electroconductive or semiconductive material, for example, a vacuum deposited metal or metal alloy, or a metallic ink, an organic ink, an inorganic ink, a metallic paste, an organic paste, an inorganic paste, or any combination thereof. Examples of metals and metal alloys that may be suitable include, but are not limited to, aluminum, chromium, copper, inconel alloys (nickel-chromium-molybdenum alloy with niobium), iron, magnesium, nickel, stainless steel, tin, titanium, tungsten, and any combination or alloy thereof.

[0073] Alternatively, the microwave energy interactive material may comprise a metal oxide, for example, oxides of aluminum, iron, and tin, optionally used in conjunction with an electrically conductive material. Another metal oxide that may be suitable is indium tin oxide (ITO). ITO has a more uniform crystal structure and, therefore, is clear at most coating thicknesses.

[0074] Alternatively still, the microwave energy interactive material may comprise a suitable electroconductive, semiconductive, or non-conductive artificial dielectric or ferroelectric. Artificial dielectrics comprise conductive, subdivided material in a polymeric or other suitable matrix or binder, and may include flakes of an electroconductive metal, for example, aluminum.

[0075] In other embodiments, the microwave energy interactive material may be carbon-based, for example, as disclosed in U.S. Patent Nos. 4,943,456, 5,002,826, 5,118,747, and 5,410,135.

[0076] In still other embodiments, the microwave energy interactive material may interact with the magnetic portion of the electromagnetic energy in the microwave oven. Correctly chosen materials of this type can self-limit based on the loss of interaction when the Curie temperature of the material is reached. An example of such an interactive coating is described in U.S. Patent No. 4,283,427.

[0077] The use of other microwave energy interactive elements is also contemplated. In one example, the microwave energy interactive element may comprise a foil or high optical density evaporated material having a thickness sufficient to reflect a substantial portion of impinging microwave energy. Such elements typically are formed from a conductive, reflective metal or metal alloy, for example, aluminum, copper, or stainless steel, in the form of a solid "patch" generally having a thickness of from about 0.000285 inches to about 0.005 inches, for example, from about 0.0003 inches to about 0.003 inches. Other such elements may have a thickness of from about 0.00035 inches to about 0.002 inches, for example, 0.0016 inches.

[0078] In some cases, microwave energy reflecting (or reflective) elements may be used as shielding elements where the food item is prone to scorching or drying out during heating. In other cases, smaller microwave energy reflecting elements may be used to diffuse or lessen the intensity of microwave energy. One example of a material utilizing such microwave energy reflecting elements is commercially available from Graphic Packaging International, Inc. (Atlanta, GA) under the trade name MicroRite® packaging material. In other examples, a plurality of microwave energy reflecting elements may be arranged to form a microwave energy distributing element to direct microwave energy to specific areas of the food item. If desired, the loops may be of a length that causes microwave energy to resonate, thereby enhancing the distribution effect.

Microwave energy distributing elements are described in U.S. Patent Nos. 6,204,492, 6,433,322, 6,552,315, and 6,677,563, each of which is incorporated by reference in its entirety.

[0079] If desired, any of the numerous microwave energy interactive elements described herein or contemplated hereby may be substantially continuous, that is, without substantial breaks or interruptions, or may be discontinuous, for example, by including one or more breaks or apertures that transmit microwave energy. The breaks or apertures may extend through the entire structure, or only through one or more layers. The number, shape, size, and positioning of such breaks or apertures may vary for a particular application depending on the type of construct being formed, the food item to be heated therein or thereon, the desired degree of heating, browning, and/or crisping, whether direct exposure to microwave energy is needed or desired to attain uniform heating of the food item, the need for regulating the change in temperature of the food item through direct heating, and whether and to what extent there is a need for venting.

[0080] By way of illustration, a microwave energy interactive element may include one or more transparent areas to effect dielectric heating of the food item. However, where the microwave energy interactive element comprises a susceptor, such apertures decrease the total microwave energy interactive area, and therefore, decrease the amount of microwave energy interactive material available for heating, browning, and/or crisping the surface of the food item. Thus, the relative amounts of microwave energy interactive areas and microwave energy transparent areas may be balanced to attain the desired overall heating characteristics for the particular food item.

[0081] As another example, one or more portions of a susceptor may be designed to be microwave energy inactive to ensure that the microwave energy is focused efficiently on the areas to be heated, browned, and/or crisped, rather than being lost to portions of the food item not intended to be browned and/or crisped or to the heating environment. Additionally or alternatively, it may be beneficial to create one or more discontinuities or inactive regions to prevent overheating or charring of the food item and/or the construct including the susceptor.

[0082] As still another example, a susceptor may incorporate one or more "fuse" elements that limit the propagation of cracks in the susceptor, and thereby control overheating, in areas of the susceptor where heat transfer to the food is low and the susceptor might tend to become too hot. The size and shape of the fuses may be varied as needed. Examples of susceptors including such fuses are provided, for example, in U.S. Patent No. 5,412,187, U.S. Patent No. 5,530,231, U.S. Patent Application Publication No. US 2008/0035634A1, published February 14, 2008, and PCT Application Publication No. WO 2007/127371, published November 8, 2007, each of which is incorporated by reference herein in its entirety.

[0083] All dimensional information presented herein is intended to be illustrative of certain aspects, features, etc., of various embodiments of the disclosure, and is not intended to limit the scope of the disclosure. The dimensions of the blanks, containers, forming tools, features, or any other dimension, can be more or less than what is shown and described in this disclosure without departing from the scope of this disclosure and can be within the listed ranges of dimensions for each feature or outside the listed ranges of dimensions for each feature without departing from the scope of this disclosure.

[0084] The blanks according to the present invention can be, for example, formed from coated paperboard and similar materials. For example, the interior and/or exterior sides of the blanks can be coated with a clay coating. The clay coating may then be printed over with product, advertising, price coding, and other information or images. The blanks may then be coated with a varnish to protect any information printed on the blanks. The blanks may also be coated with, for example, a moisture barrier layer, on either or both sides of the blanks.

[0085] In accordance with the exemplary embodiments, the blanks may be constructed of paperboard of a caliper such that it is heavier and more rigid than ordinary paper. The blanks can also be constructed of other materials, such as cardboard, hard paper, or any other material having properties suitable for enabling the carton package to function at least generally as described above.

[0086] The foregoing description illustrates and describes various embodiments of the present disclosure. As various changes could be made in the above construction without departing from the scope of the disclosure, it is intended that all matter contained in the above description or shown in the accompanying drawings shall be interpreted as illustrative and not in a limiting sense. Furthermore, the scope of the present disclosure covers various modifications, combinations, and alterations, etc., of the above-described embodiments. Additionally, the disclosure shows and describes only selected embodiments, but various other combinations, modifications, and environments are contemplated and are within the scope of the inventive concept as expressed herein, commensurate with the above teachings, and/or within the skill or knowledge of the relevant art. Furthermore, certain features and characteristics of each embodiment may be selectively interchanged and applied to other illustrated and non-illustrated embodiments without departing from the scope of the disclosure.

WHAT IS CLAIMED IS:

1. A container for holding a food product, the container comprising:

a flange comprising a central panel extending at least partially around a central opening;

a sidewall extending at least partially around an interior of the container, the sidewall comprising a plurality of panels foldably connected to the central panel;

at least one corner flap foldably connected to a respective panel of the plurality of panels, the at least one corner flap obliquely arranged relative to the respective panel of the plurality of panels; and

denesting features comprising a denesting lug extending from the at least one corner flap and outwardly from the sidewall,

the denesting lug positioned for engaging a nested container positioned below the container in a stacked arrangement and for forming a denesting gap between the flange and the nested container.

2. The container of claim 1, wherein the respective panel of the plurality of panels at least partially defines a plane, and the at least one corner flap diverges from the plane.

3. The container of claim 2, wherein the denesting lug at least partially defines an engagement edge extending from an oblique edge of the at least one corner flap and an end edge extending from the engagement edge top a top edge of the at least one corner flap.

4. The container of claim 3, wherein the engagement edge includes at least one straight segment and at least one oblique segment.

5. The container of claim 3, wherein the central panel at least partially defines at least one landing area adjacent the central opening for receiving a denesting lug of a nested container positioned above the container in a stacked arrangement.

6. The container of claim 5, wherein the central opening of the flange is at least partially defined by an interior free edge of the central panel, the interior free edge of the central panel comprises at least one oblique end segment, the at least one landing area positioned adjacent the at least one oblique end segment.

7. The container of claim 6, wherein the plurality of panels of the sidewall comprises a first side panel, a second side panel, a first end panel, and a second end panel each foldably connected to the central panel.

8. The container of claim 7, further comprising a bottom wall comprising a plurality of panels foldably connected to a respective panel of the plurality of panels of the sidewall, the plurality of panels of the bottom wall comprising a first bottom panel foldably connected to the first side panel, a second bottom panel foldably connected to the second side panel, a third bottom panel foldably connected to the first end panel, and a fourth bottom panel foldably connected to the second end panel.

9. The container of claim 8, further comprising a liner separably attached to at least a portion of the sidewall and at least a portion of the bottom wall.

10. A blank for forming a container for holding a food product, the blank comprising:

a central panel extending at least partially around a central opening for at least partially forming a flange of the container formed from the blank;

a plurality of panels foldably connected to the central panel for at least partially forming a sidewall extending at least partially around an interior of the container formed from the blank;

at least one corner flap foldably connected to a respective panel of the plurality of panels, the at least one corner flap for being obliquely arranged relative to the respective panel of the plurality of panels when the container is formed from the blank; and

denesting features comprising a denesting lug extending from the at least one corner flap,

the denesting lug for being positioned extending outwardly from the sidewall for engaging a nested container positioned below the container formed from the blank in a stacked arrangement and for forming a denesting gap between the flange and the nested container when the container is formed from the blank.

11. The blank of claim 10, wherein the respective panel of the plurality of panels at least partially defines a plane, and the at least one corner flap is for being positioned diverging from the plane when the container is formed form the blank.

12. The blank of claim 11, wherein the denesting lug at least partially defines an engagement edge extending from an oblique edge of the at least one corner flap and an end edge extending from the engagement edge top a top edge of the at least one corner flap.

13. The blank of claim 12, wherein the engagement edge includes at least one straight segment and at least one oblique segment.

14. The blank of claim 12, wherein the central panel at least partially defines at least one landing area adjacent the central opening for receiving a denesting lug of a nested container positioned above the container formed from the blank in a stacked arrangement.

15. The blank of claim 14, wherein the central opening of the flange is at least partially defined by an interior free edge of the central panel, the interior free edge of the central panel comprises at least one oblique end segment, the at least one landing area positioned adjacent the at least one oblique end segment.

16. The blank of claim 15, wherein the plurality of panels comprises a first side panel, a second side panel, a first end panel, and a second end panel each foldably connected to the central panel.

17. The blank of claim 16, wherein the plurality of panels further comprises a first bottom panel foldably connected to the first side panel, a second bottom panel foldably connected to the second side panel, a third bottom panel foldably connected to the first end panel, and a fourth bottom panel foldably connected to the second end panel, the first bottom panel, the second bottom panel, the third bottom panel, and the fourth bottom panel for at least partially forming a bottom wall of the container formed from the blank.

18. The blank of claim 17, further in combination with a liner for being separably attached to at least a portion of the sidewall of the container formed from the blank and at least a portion of the bottom wall of the container formed from the blank when the container is formed from the blank.

19. A method of forming a container for holding a food product, the container comprising:

obtaining a blank comprising a central panel extending at least partially around a central opening, a plurality of panels foldably connected to the central panel, the blank further comprising at least one corner flap foldably connected to a respective panel of the plurality of panels, and denesting features comprising a denesting lug extending from the at least one corner flap;

positioning the central panel to at least partially form a flange;

positioning the plurality of panels extending at least partially around an interior of the container; and

positioning the at least one corner flap extending outwardly from the sidewall for engaging a nested container positioned below the container in a stacked arrangement and for forming a denesting gap between the flange and the nested container.

20. The method of claim 19, wherein the respective panel of the plurality of panels at least partially defines a plane, and the at least one corner flap diverges from the plane.

21. The method of claim 20, wherein the denesting lug at least partially defines an engagement edge extending from an oblique edge of the at least one corner flap and an end edge extending from the engagement edge top a top edge of the at least one corner flap.

22. The method of claim 21, wherein the engagement edge includes at least one straight segment and at least one oblique segment.

23. The method of claim 21, wherein the central panel at least partially defines at least one landing area adjacent the central opening for receiving a denesting lug of a nested container positioned above the container in a stacked arrangement.

24. The method of claim 23, wherein the central opening of the flange is at least partially defined by an interior free edge of the central panel, the interior free edge of the central panel comprises at least one oblique end segment, the at least one landing area positioned adjacent the at least one oblique end segment.

25. The method of claim 24, wherein the plurality of panels of the sidewall comprises a first side panel, a second side panel, a first end panel, and a second end panel each foldably connected to the central panel.

26. The method of claim 25, wherein the plurality of panels further comprises a first bottom panel foldably connected to the first side panel, a second bottom panel foldably connected to the second side panel, a third bottom panel foldably connected to the first end panel, and a fourth bottom panel foldably connected to the second end panel, and the method further comprises positioning the first bottom panel, the second bottom panel, the third bottom panel, and the fourth bottom panel at least partially forming a bottom wall of the container.

27. The method of claim 26, further comprising separably attaching a liner to at least a portion of the sidewall and at least a portion of the bottom wall.

28. A stacked arrangement of containers for holding a food product, the stacked arrangement comprising:

a lower nested container at least partially receiving an upper nested container,

the upper nested container comprising:

a flange comprising a central panel extending at least partially around a central opening;

a sidewall extending at least partially around an interior of the container, the sidewall comprising a plurality of panels foldably connected to the central panel;

at least one corner flap foldably connected to a respective panel of the plurality of panels, the at least one corner flap obliquely arranged relative to the respective panel of the plurality of panels; and

denesting features comprising a denesting lug extending from the at least one corner flap and outwardly from the sidewall,

the denesting lug positioned for engaging the lower nested container positioned below the upper nested container in a stacked arrangement and for forming a denesting gap between the flange and the lower nested container.

29. The stacked arrangement of containers of claim 28, wherein the respective panel of the plurality of panels at least partially defines a plane, and the at least one corner flap diverges from the plane.

30. The stacked arrangement of containers of claim 29, wherein the denesting lug at least partially defines an engagement edge extending from an oblique edge of the at least one corner flap and an end edge extending from the engagement edge top a top edge of the at least one corner flap.

31. The stacked arrangement of containers of claim 30, wherein the engagement edge includes at least one straight segment and at least one oblique segment.

32. The stacked arrangement of containers of claim 30, wherein the central panel at least partially defines at least one landing area adjacent the central opening for receiving a denesting lug of a nested container positioned above the upper nested container in a stacked arrangement.

33. The stacked arrangement of containers of claim 32, wherein the central opening of the flange is at least partially defined by an interior free edge of the central panel, the interior free edge of the central panel comprises at least one oblique end segment, the at least one landing area positioned adjacent the at least one oblique end segment.

34. The stacked arrangement of containers of claim 33, wherein the upper nested container is a first upper nested container and the stacked arrangement of containers further comprises a second upper nested container, the at least one landing area of the first upper nested container at least partially receiving a denesting lug of the second upper nested container.

35. The stacked arrangement of containers of claim 33, wherein the plurality of panels of the sidewall comprises a first side panel, a second side panel, a first end panel, and a second end panel each foldably connected to the central panel.

36. The stacked arrangement of containers of claim 35, further comprising a bottom wall comprising a plurality of panels foldably connected to a respective panel of the plurality of panels of the sidewall, the plurality of panels of the bottom wall comprising a first bottom panel foldably connected to the first side panel, a second bottom panel foldably connected to the second side panel, a third bottom panel foldably connected to the first end panel, and a fourth bottom panel foldably connected to the second end panel.

37. The stacked arrangement of containers of claim 36, further comprising a liner separably attached to at least a portion of the sidewall and at least a portion of the bottom wall.

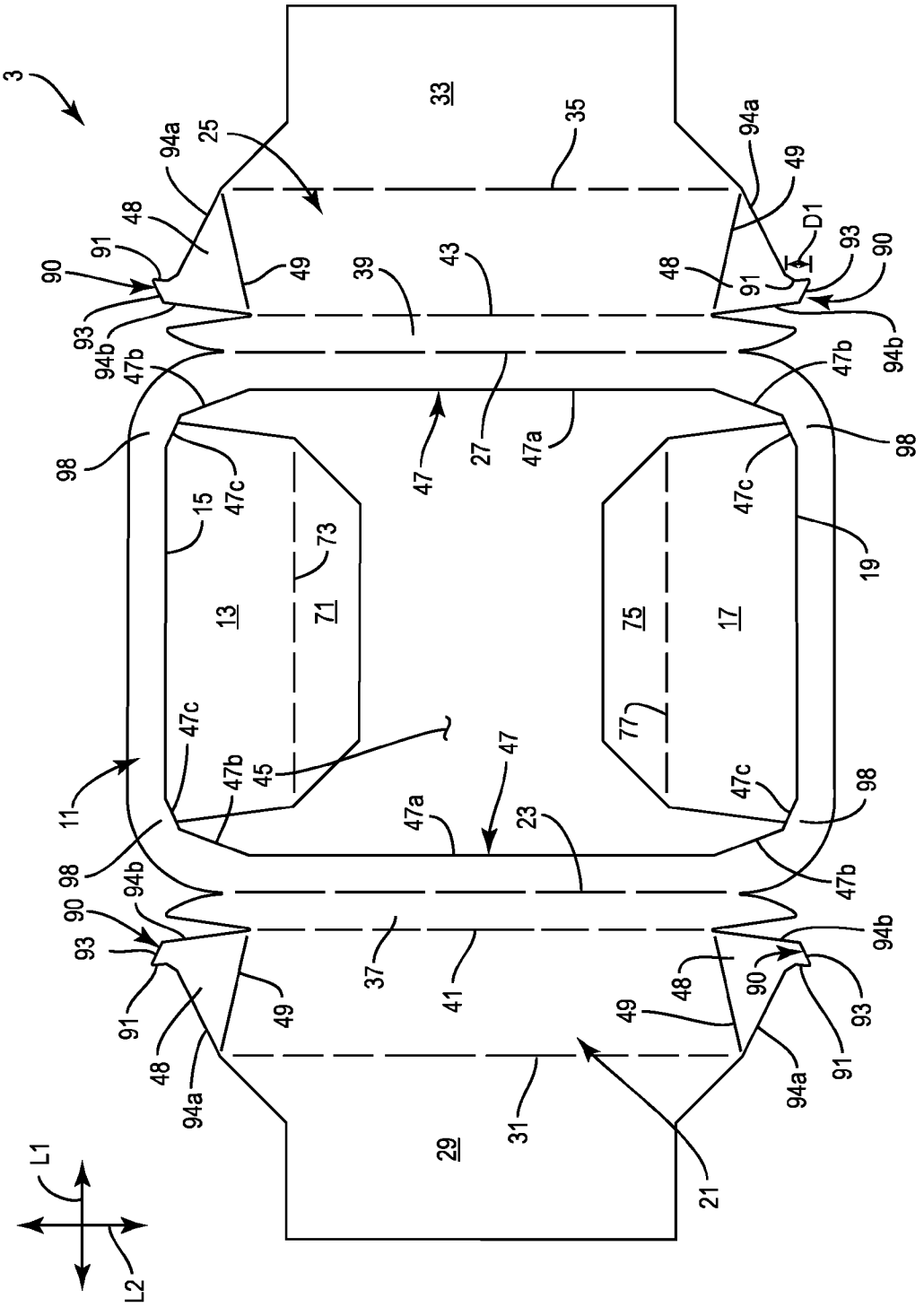
3
33
35
25
94a
49
48
91
90
93
94b
47b
98
47c
15
73
13
71
47
27
47a
39
43
D1
75
17
19
77
45
11
23
37
41
31
29
21
L1
L2

FIG. 1

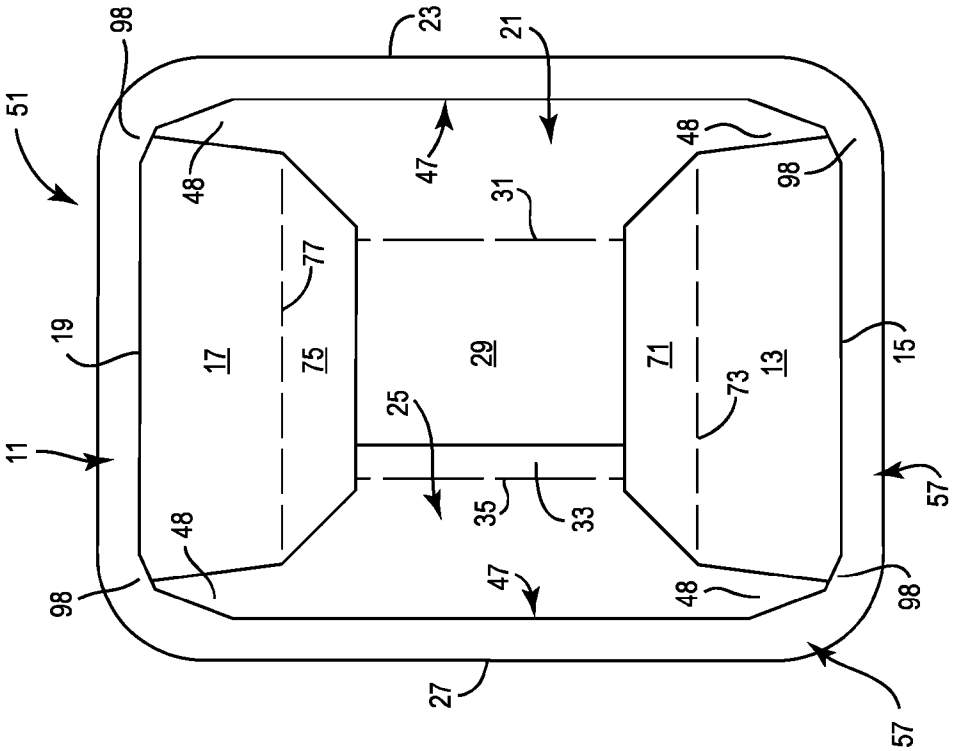
98
23
21
51
48
47
31
48
98
77
19
17
75
29
71
13
15
25
73
11
57
48
35
33
98
47
48
98
27
57

FIG. 1B

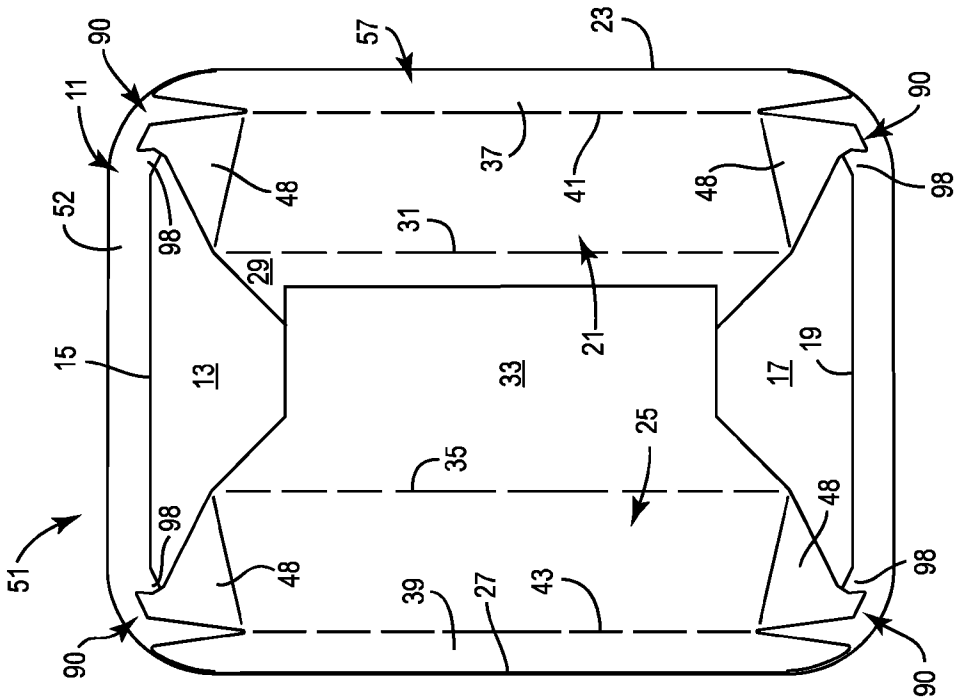
90
57
23
11
90
37
41
48
48
98
52
98
31
29
21
15
13
33
17
19
25
35
51
98
48
48
98
39
27
43
90
90

FIG. 1A

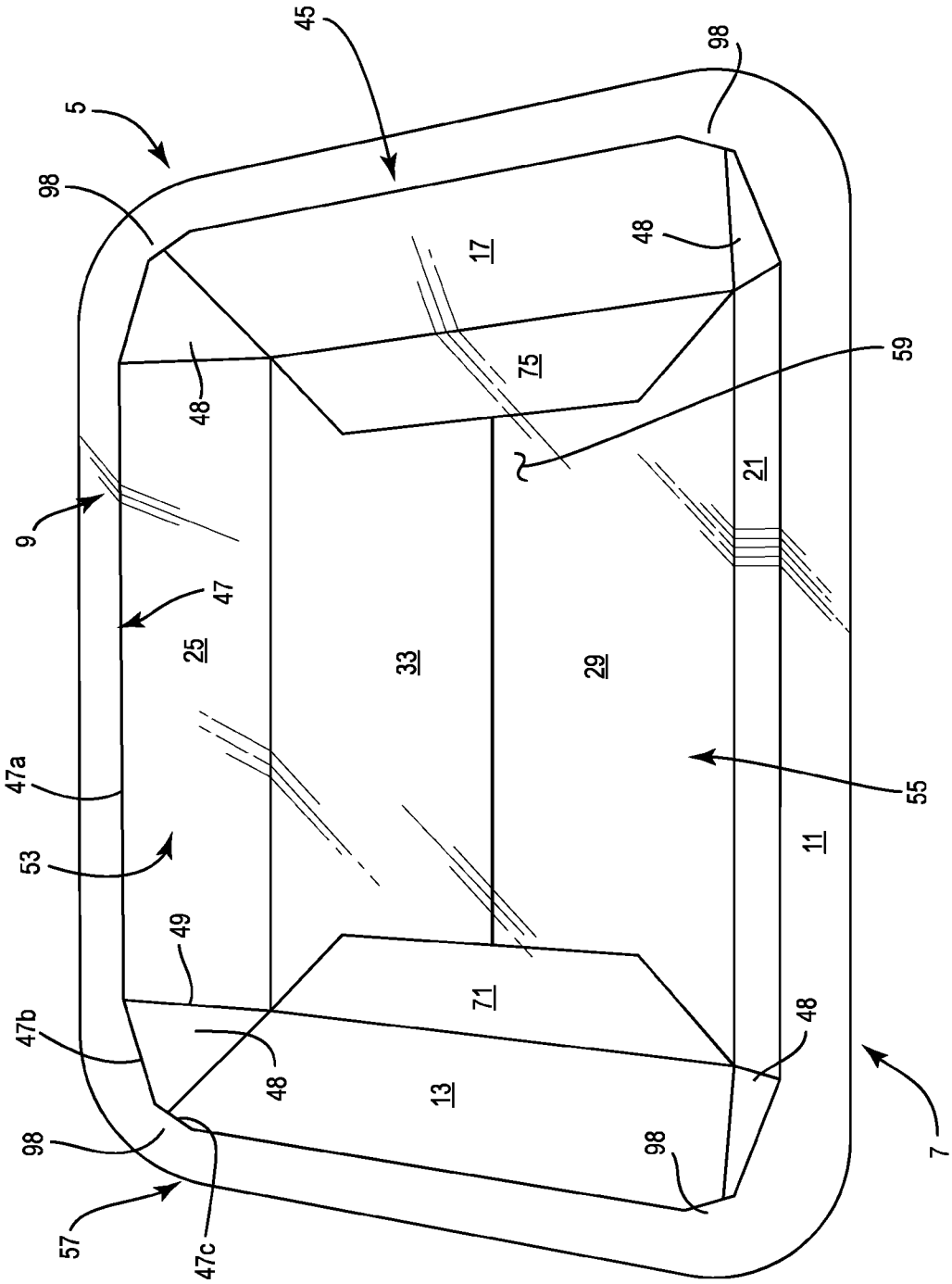
45
98
5
98
17
48
48
75
59
9
21
47
25
33
29
47a
55
53
11
49
71
47b
48
48
13
98
98
57
47c
7

FIG. 2

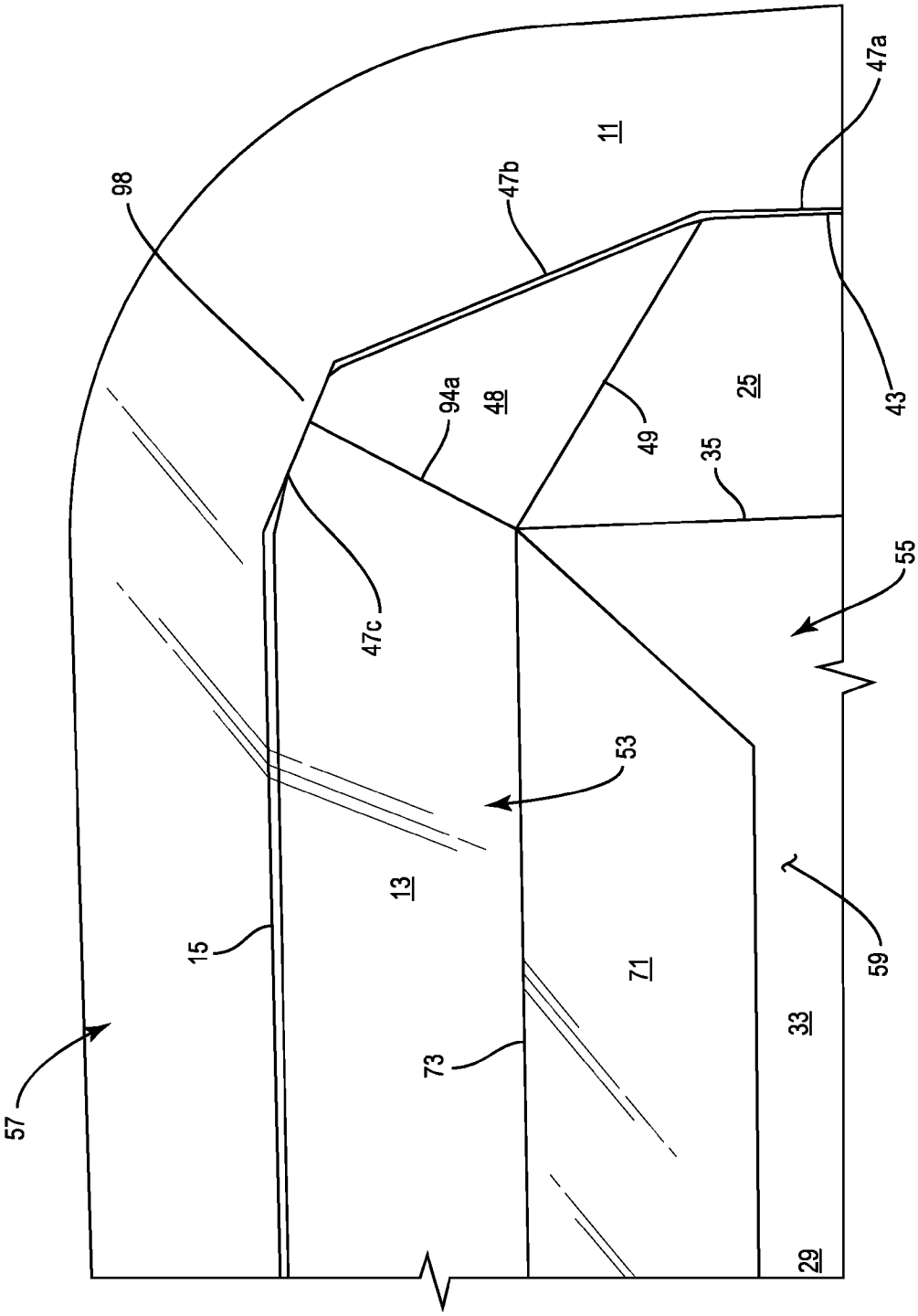

FIG. 3

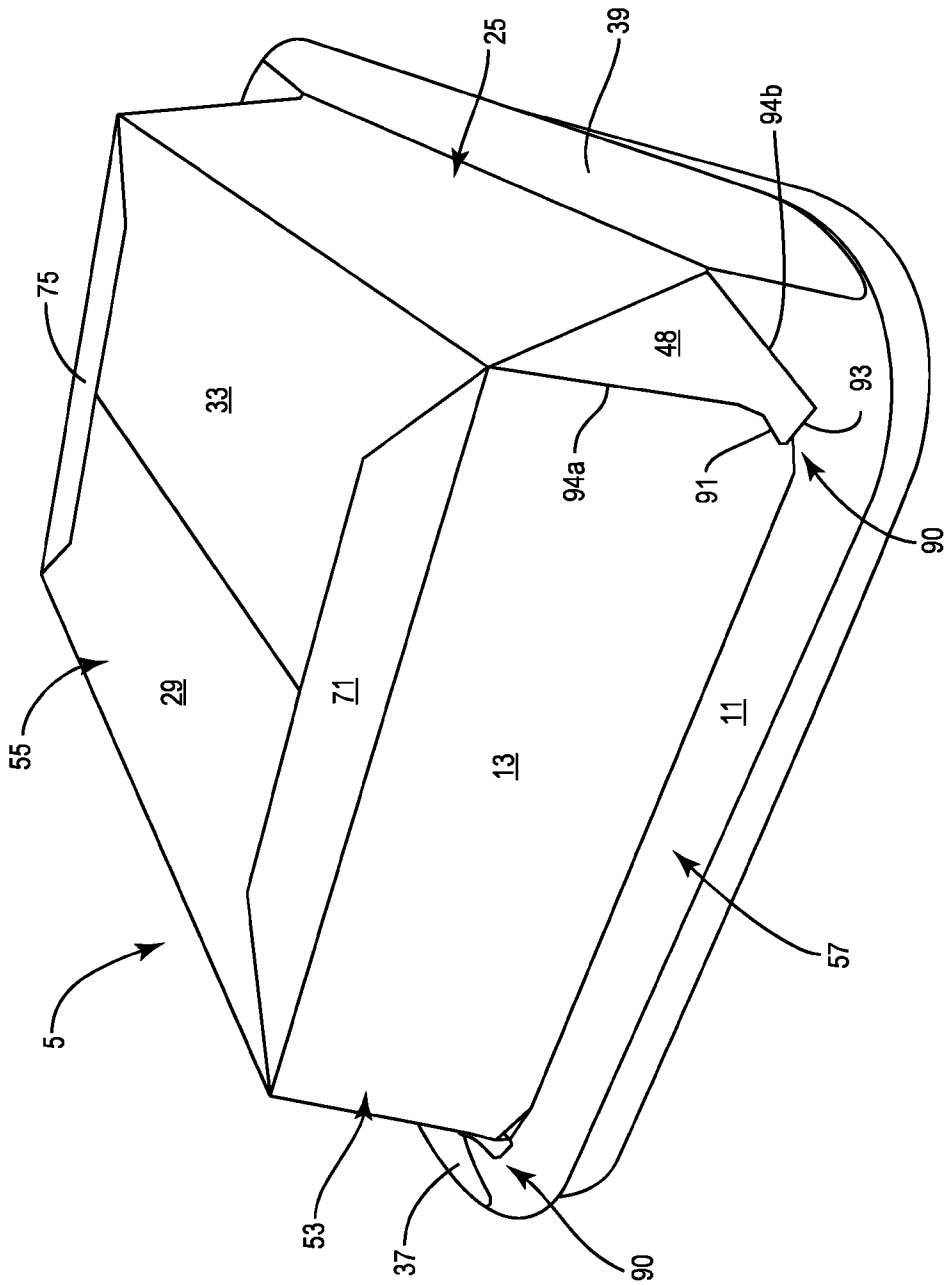

FIG. 4

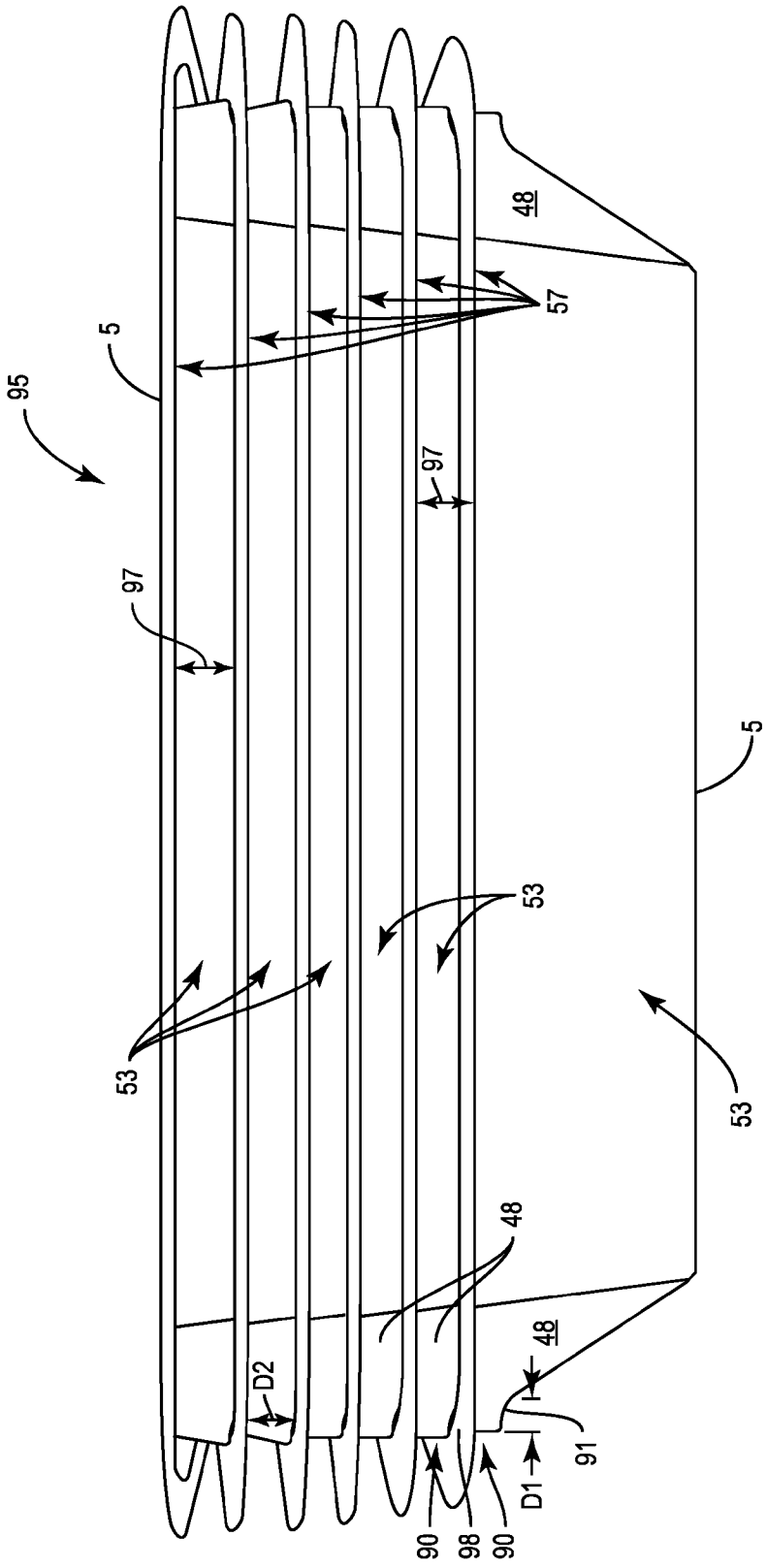

FIG. 5

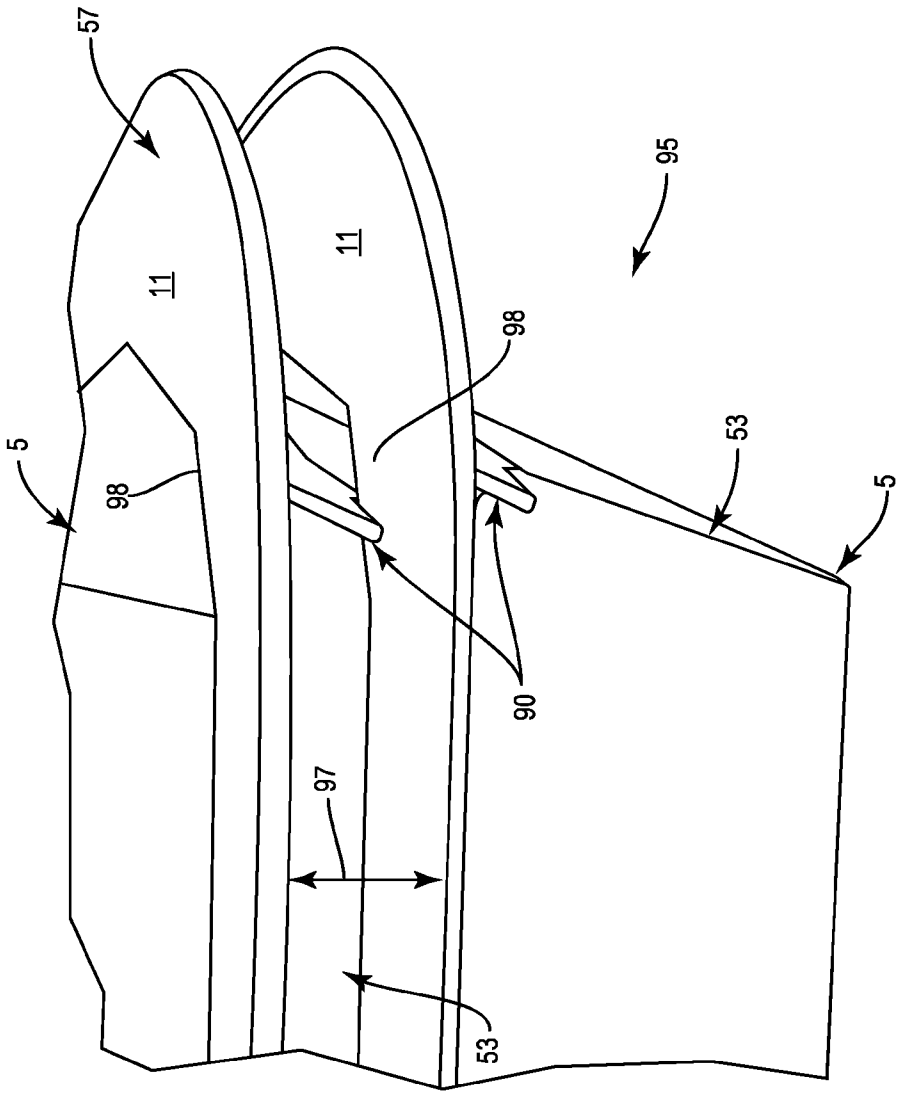

FIG. 6

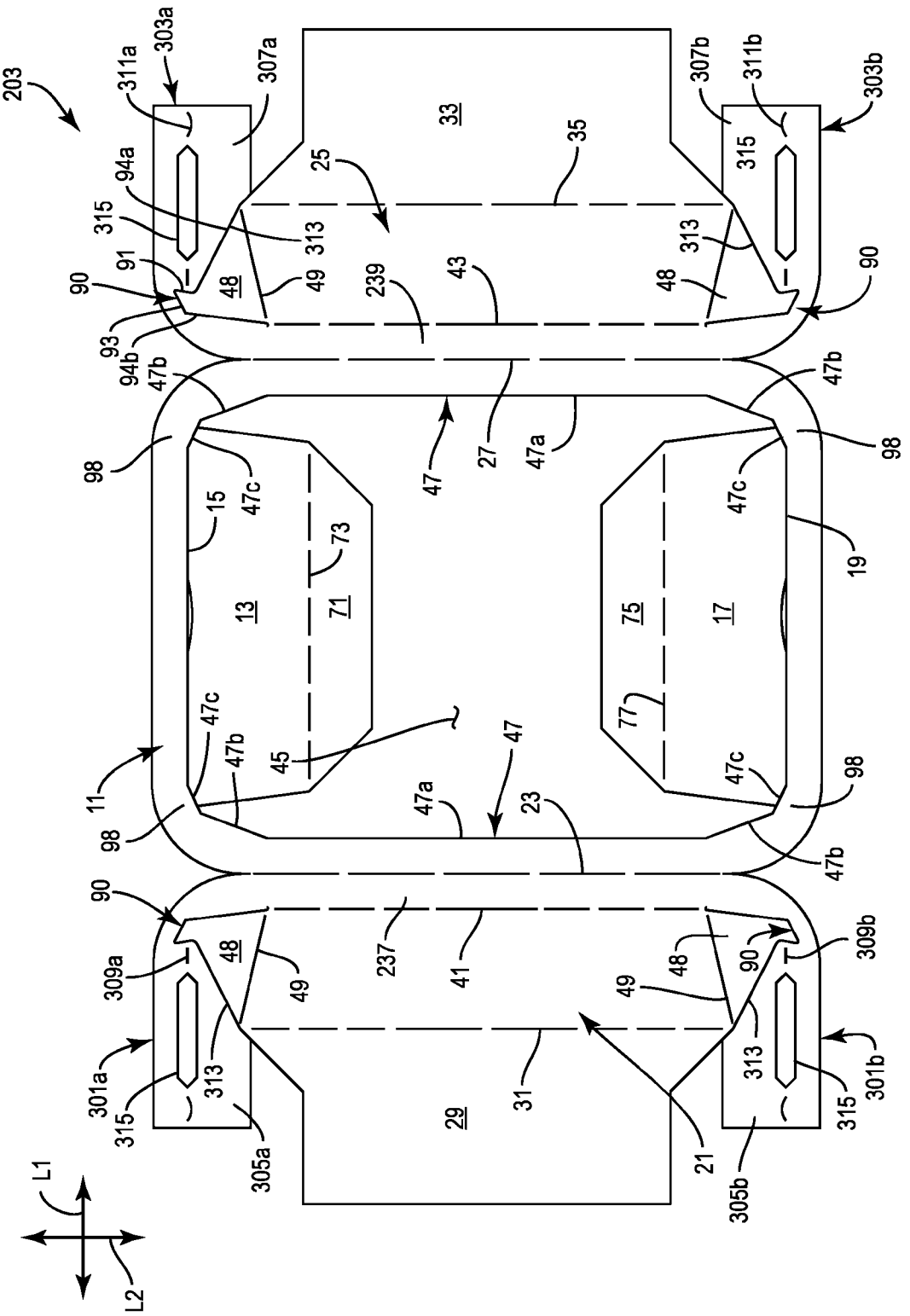
203
303a
311a
307a
94a
315
313
91
90
48
49
93
94b
47b
98
47c
15
13
73
71
11
45
47
47a
23
33
35
25
239
43
27
307b
311b
303b
315
313
48
90
47b
98
47c
19
75
17
77
47c
98
47b
90
309a
48
49
237
41
49
48
90
309b
301a
315
313
305a
29
31
21
313
315
301b
305b
L1
L2

FIG. 7

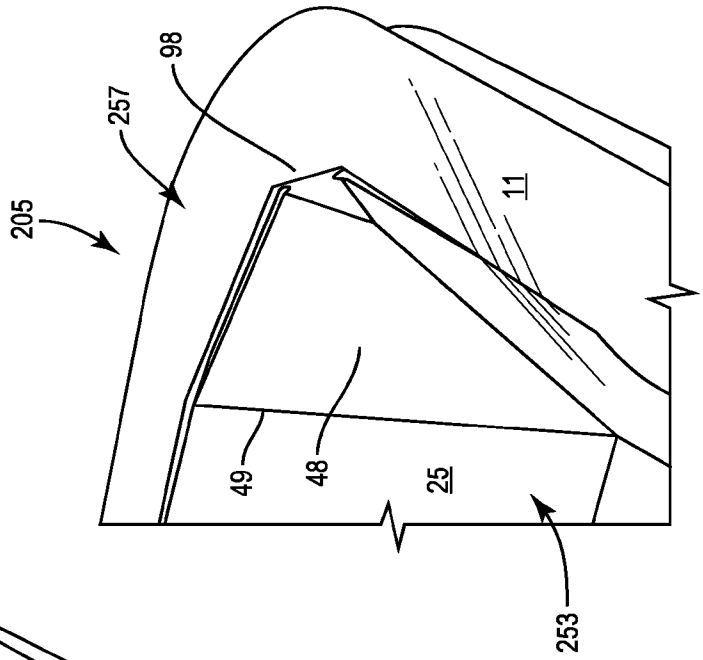
98
257
205
11
49
48
25
253

FIG. 9

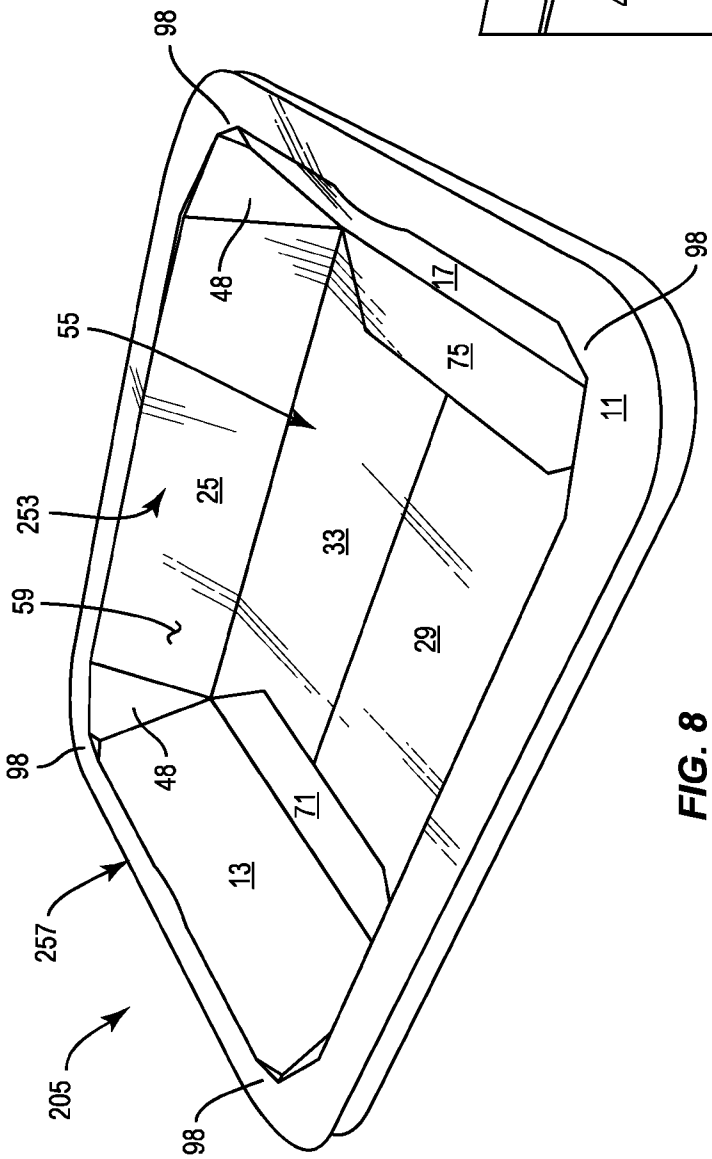
98
48
55
17
75
11
98
253
25
33
59
29
98
48
71
13
257
205
98

FIG. 8

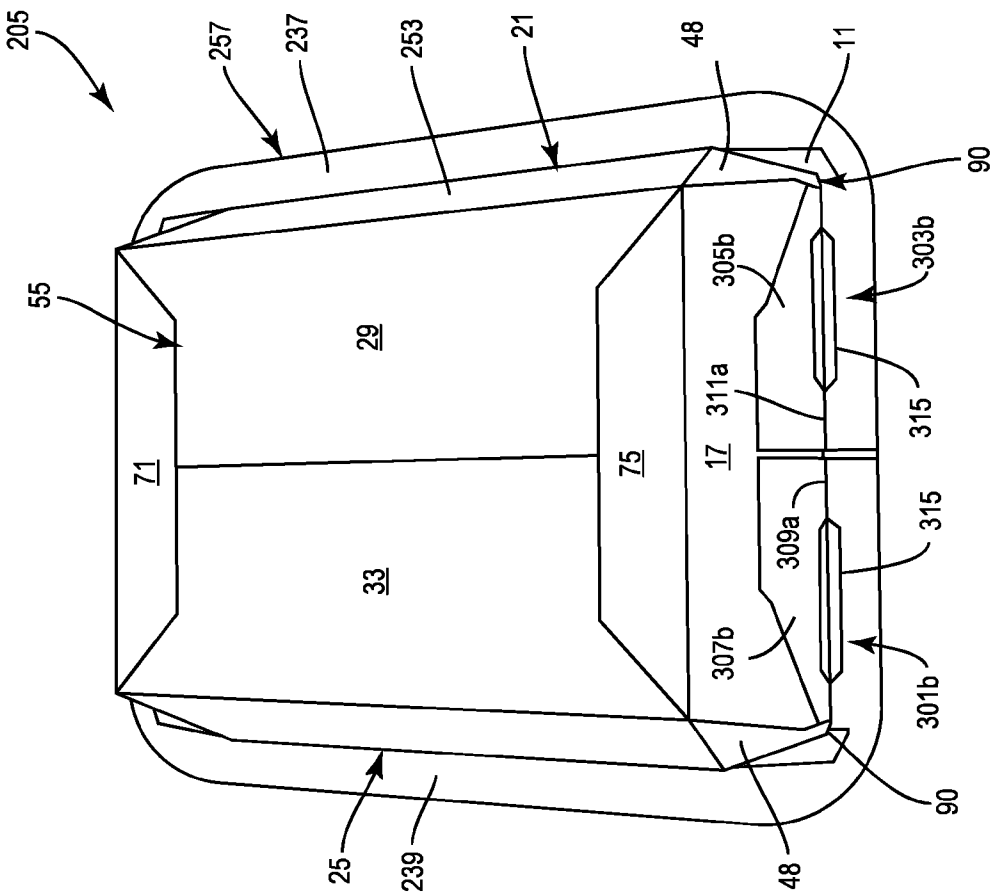
205
257
237
253
21
48
11
90
303b
305b
55
29
311a
315
71
75
17
315
309a
33
307b
301b
90
25
239
48

FIG. 10

INTERNATIONAL SEARCH REPORT

International application No.
PCT/US2024/039240

A. CLASSIFICATION OF SUBJECT MATTER

B65D 5/18(2006.01)i; **B65D 5/00**(2006.01)i; **B65D 21/02**(2006.01)i

According to International Patent Classification (IPC) or to both national classification and IPC

B. FIELDS SEARCHED

Minimum documentation searched (classification system followed by classification symbols)

B65D 5/18(2006.01); B65D 1/28(2006.01); B65D 5/00(2006.01); B65D 5/20(2006.01); B65D 5/24(2006.01); B65D 5/28(2006.01); B65D 5/56(2006.01)

Documentation searched other than minimum documentation to the extent that such documents are included in the fields searched

Korean utility models and applications for utility models
Japanese utility models and applications for utility models

Electronic data base consulted during the international search (name of data base and, where practicable, search terms used)

eKOMPASS(KIPO internal) & Keywords: container, liner, corner flap, cutout, denesting features

C. DOCUMENTS CONSIDERED TO BE RELEVANT

Category*	Citation of document, with indication, where appropriate, of the relevant passages	Relevant to claim No.
X	US 2022-0055789 A1 (JOSPAK OY) 24 February 2022 (2022-02-24) paragraphs [0035]-[0051], claim 10, and figures 2a-7k	1-2,10-11,19-20,28-29
Y		3-9,12-18,21-27,30-37
DY	US 2022-0348376 A1 (GRAPHIC PACKAGING INTERNATIONAL, LLC) 03 November 2022 (2022-11-03) paragraphs [0056]-[0057] and figure 12	3-9,12-18,21-27,30-37
A	EP 0671332 A1 (WADDINGTONS CARTONS LIMITED) 13 September 1995 (1995-09-13) claim 1 and figures 1-5	1-37
A	US 4130236 A (MANIZZA, GUELFO A.) 19 December 1978 (1978-12-19) column 2, line 59 - column 4, line 11 and figures 1-5	1-37
A	JP 05-294333 A (DAINIPPON PRINTING CO., LTD.) 09 November 1993 (1993-11-09) paragraphs [0008]-[0010] and figures 3-5	1-37

☐ Further documents are listed in the continuation of Box C. ☑ See patent family annex.

* Special categories of cited documents:
"A" document defining the general state of the art which is not considered to be of particular relevance
"D" document cited by the applicant in the international application
"E" earlier application or patent but published on or after the international filing date
"L" document which may throw doubts on priority claim(s) or which is cited to establish the publication date of another citation or other special reason (as specified)
"O" document referring to an oral disclosure, use, exhibition or other means
"P" document published prior to the international filing date but later than the priority date claimed
"T" later document published after the international filing date or priority date and not in conflict with the application but cited to understand the principle or theory underlying the invention
"X" document of particular relevance; the claimed invention cannot be considered novel or cannot be considered to involve an inventive step when the document is taken alone
"Y" document of particular relevance; the claimed invention cannot be considered to involve an inventive step when the document is combined with one or more other such documents, such combination being obvious to a person skilled in the art
"&" document member of the same patent family

Date of the actual completion of the international search	Date of mailing of the international search report
18 November 2024	**18 November 2024**

Name and mailing address of the ISA/KR	Authorized officer
Korean Intellectual Property Office **189 Cheongsa-ro, Seo-gu, Daejeon** **35208, Republic of Korea**	**HWANG, Chan Yoon**
Facsimile No. **+82-42-481-8578**	Telephone No. **+82-42-481-3347**

INTERNATIONAL SEARCH REPORT
Information on patent family members

International application No.
PCT/US2024/039240

Patent document cited in search report	Publication date (day/month/year)	Patent family member(s)	Publication date (day/month/year)
US 2022-0055789 A1	24 February 2022	CN 113396110 A	14 September 2021
		EP 3894329 A1	20 October 2021
		EP 3894329 A4	14 September 2022
		FI 130517 B	24 October 2023
		FI 20186088 A1	15 June 2020
		JP 2022-513450 A	08 February 2022
		US 12103743 B2	01 October 2024
		WO 2020-120840 A1	18 June 2020
US 2022-0348376 A1	03 November 2022	AU 2019-261737 B2	16 April 2020
		AU 2019-261737 C1	06 August 2020
		AU 2019-261738 A1	27 February 2020
		AU 2019-261738 B2	22 October 2020
		BR 112021001311 A2	27 April 2021
		BR 112021001320 A2	06 July 2021
		CA 3106243 A1	13 February 2020
		CA 3106243 C	29 August 2023
		CA 3107740 A1	13 February 2020
		CA 3107740 C	23 May 2023
		CN 112566850 A	26 March 2021
		CN 112585063 A	30 March 2021
		EP 3634869 A1	15 April 2020
		EP 3634869 A4	23 December 2020
		EP 3638594 A1	22 April 2020
		EP 3638594 A4	28 April 2021
		JP 2021-533041 A	02 December 2021
		JP 2021-534040 A	09 December 2021
		JP 7361096 B2	13 October 2023
		JP 7418407 B2	19 January 2024
		KR 10-2021-0031525 A	19 March 2021
		KR 10-2021-0031526 A	19 March 2021
		KR 10-2023-0170988 A	19 December 2023
		KR 10-2589800 B1	13 October 2023
		KR 10-2686303 B1	17 July 2024
		MX 2021001443 A	09 March 2021
		MX 2021001445 A	09 March 2021
		NZ 759033 A	30 July 2021
		NZ 759116 A	24 December 2021
		PH 12021550279 A1	11 October 2021
		PH 12021550280 A1	11 October 2021
		RU 2755508 C1	16 September 2021
		RU 2756121 C1	28 September 2021
		US 11434038 B2	06 September 2022
		US 11584561 B2	21 February 2023
		US 2020-0047940 A1	13 February 2020
		US 2020-0047975 A1	13 February 2020
		US 2023-0072635 A1	09 March 2023
		WO 2020-033350 A1	13 February 2020
		WO 2020-033352 A1	13 February 2020
EP 0671332 A1	13 September 1995	None	
US 4130236 A	19 December 1978	None	

INTERNATIONAL SEARCH REPORT
Information on patent family members

International application No.
PCT/US2024/039240

Patent document cited in search report	Publication date (day/month/year)	Patent family member(s)	Publication date (day/month/year)
JP 05-294333 A	09 November 1993	JP 3177297 B2	18 June 2001