US00D785877S

(12) United States Design Patent

Cao et al.

(10) Patent No.: US D785,877 S
(45) Date of Patent: ** May 2, 2017

(54) **CLEANER**

(71) Applicants: **JIANGSU MIDEA CLEANING APPLIANCES CO., LTD**, Suzhou (CN); **MIDEA GROUP CO., LTD**, Foshan (CN)

(72) Inventors: **Pei Cao**, Suzhou (CN); **Yang Gu**, Suzhou (CN)

(73) Assignees: **JIANGSU MIDEA CLEANING APPLIANCES CO., LTD**, Suzhou, Jiangsu (CN); **MIDEA GROUP CO., LTD**, Foshan, Guangdong (CN)

(**) Term: **15 Years**

(21) Appl. No.: **29/543,689**

(22) Filed: **Oct. 27, 2015**

(51) **LOC (10) Cl.** **15-05**

(52) **U.S. Cl.**
USPC **D32/17**

(58) **Field of Classification Search**
USPC D32/1, 21, 31, 18
CPC A47L 5/28; A47L 9/1633; A47L 2201/04; A47L 2201/00
See application file for complete search history.

(56) **References Cited**

U.S. PATENT DOCUMENTS

D343,934	S	*	2/1994	Meelen	D32/21
D381,779	S	*	7/1997	Pritchett	D32/22
D405,570	S	*	2/1999	Broecking	D32/32
D418,643	S	*	1/2000	Hoshino	D32/21
D454,994	S	*	3/2002	Harada	D32/21
D462,488	S	*	9/2002	Santiago	D32/18
6,553,612	B1	*	4/2003	Dyson	A47L 5/28 15/319
D506,042	S	*	6/2005	Griffin	D32/21
D534,696	S	*	1/2007	Choi	D32/21
D567,458	S	*	4/2008	Jiang	D32/15
D596,359	S	*	7/2009	Hollis	D32/21
D618,870	S	*	6/2010	Williams	D32/24
D646,030	S	*	9/2011	Carr	D32/21
D724,801	S	*	3/2015	Yoon	D32/21
D730,599	S	*	5/2015	Uim	D32/18
D737,006	S	*	8/2015	Heck	D32/21
D744,178	S	*	11/2015	Choi	D32/21
D749,282	S	*	2/2016	Kim	D32/18
D749,283	S	*	2/2016	Kim	D32/18
D749,285	S	*	2/2016	Kim	D32/31
D752,831	S	*	3/2016	Kim	D32/18
D760,969	S	*	7/2016	Kim	D32/18

* cited by examiner

Primary Examiner — Michael A. Pratt
Assistant Examiner — Michelle E Wilson
(74) *Attorney, Agent, or Firm* — Hamre, Schumann, Mueller & Larson, P.C.

(57) **CLAIM**

The ornamental design for a "cleaner," as shown and described.

DESCRIPTION

FIG. **1** is a front view of the cleaner;
FIG. **2** is a rear view of the cleaner;
FIG. **3** is a left side view of the cleaner;
FIG. **4** is a right side view of the cleaner;
FIG. **5** is a top view of the cleaner;
FIG. **6** is a bottom view of the cleaner;
FIG. **7** is one perspective view of the cleaner; and,
FIG. **8** is another perspective view of the cleaner.
The broken lines showing in the figures are for illustrative purposes only and form no part of the claimed design.

1 Claim, 8 Drawing Sheets

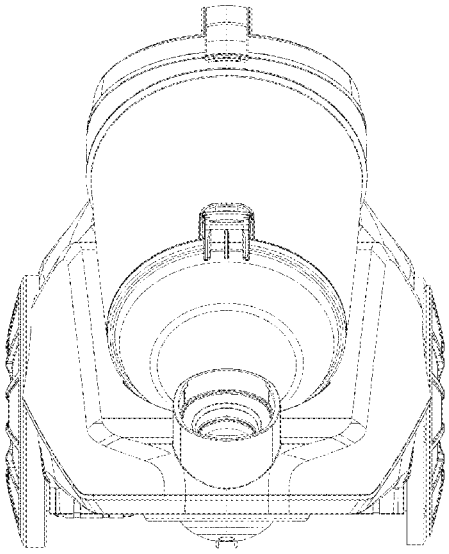

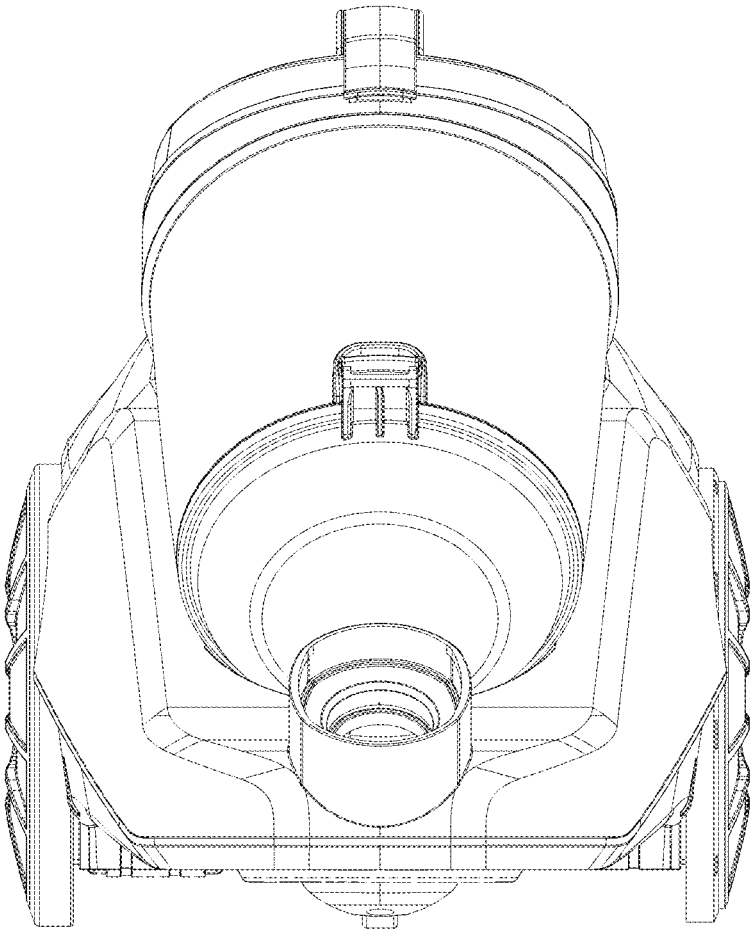

FIG. 1

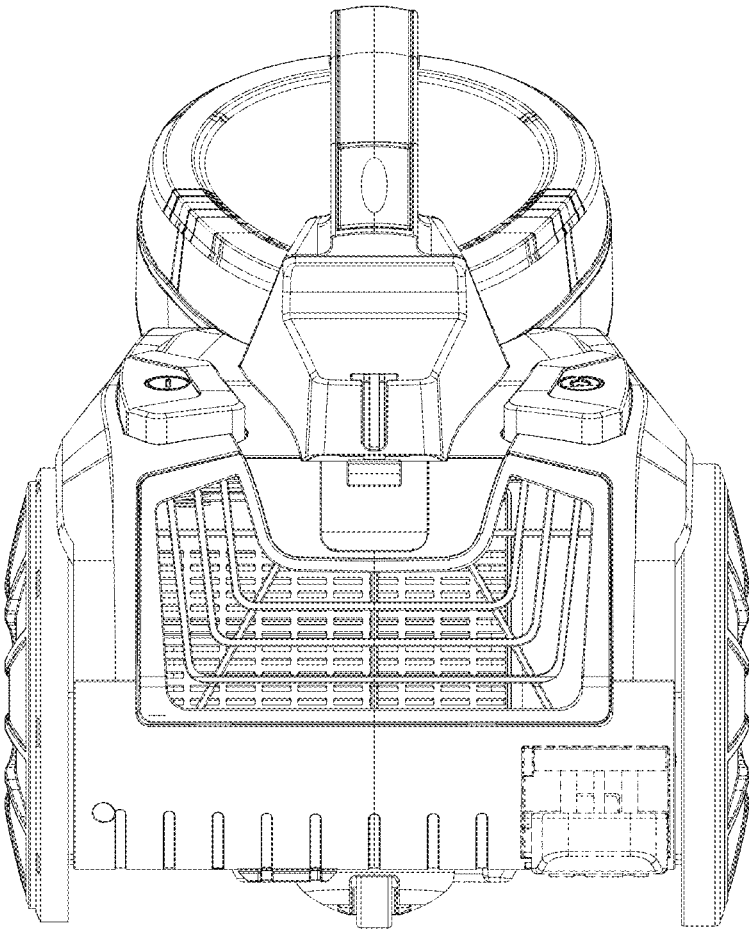

FIG. 2

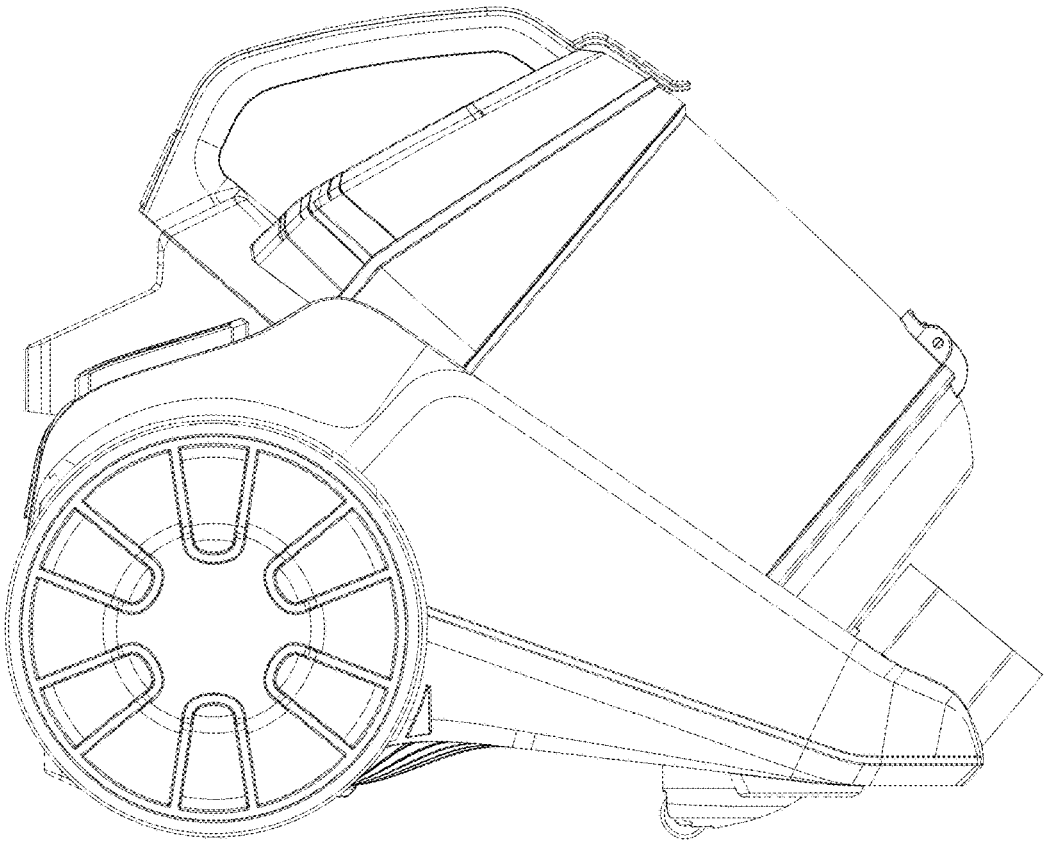

FIG. 3

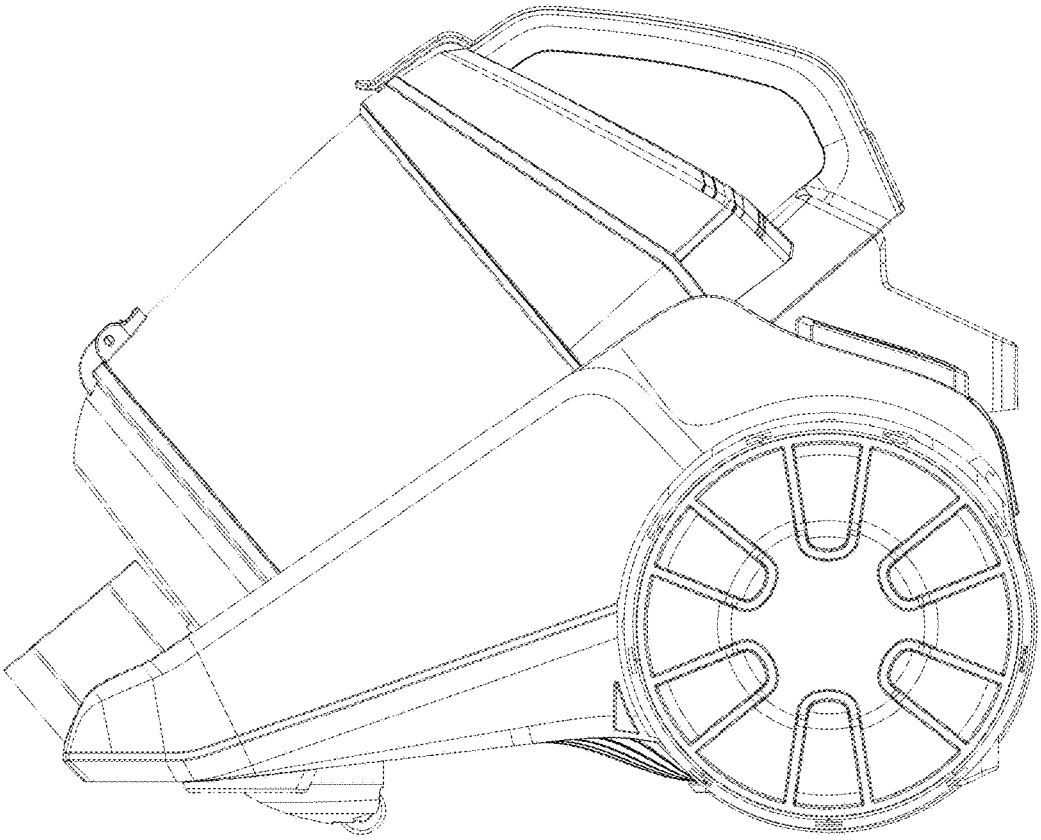

FIG. 4

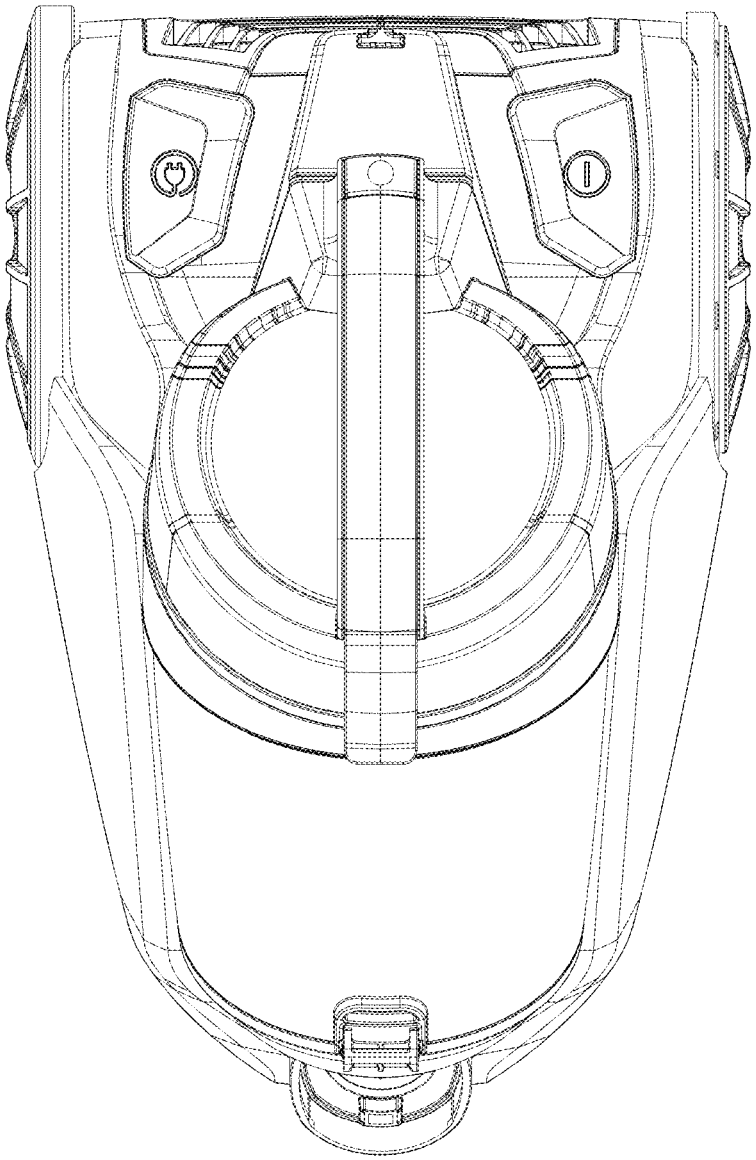

FIG. 5

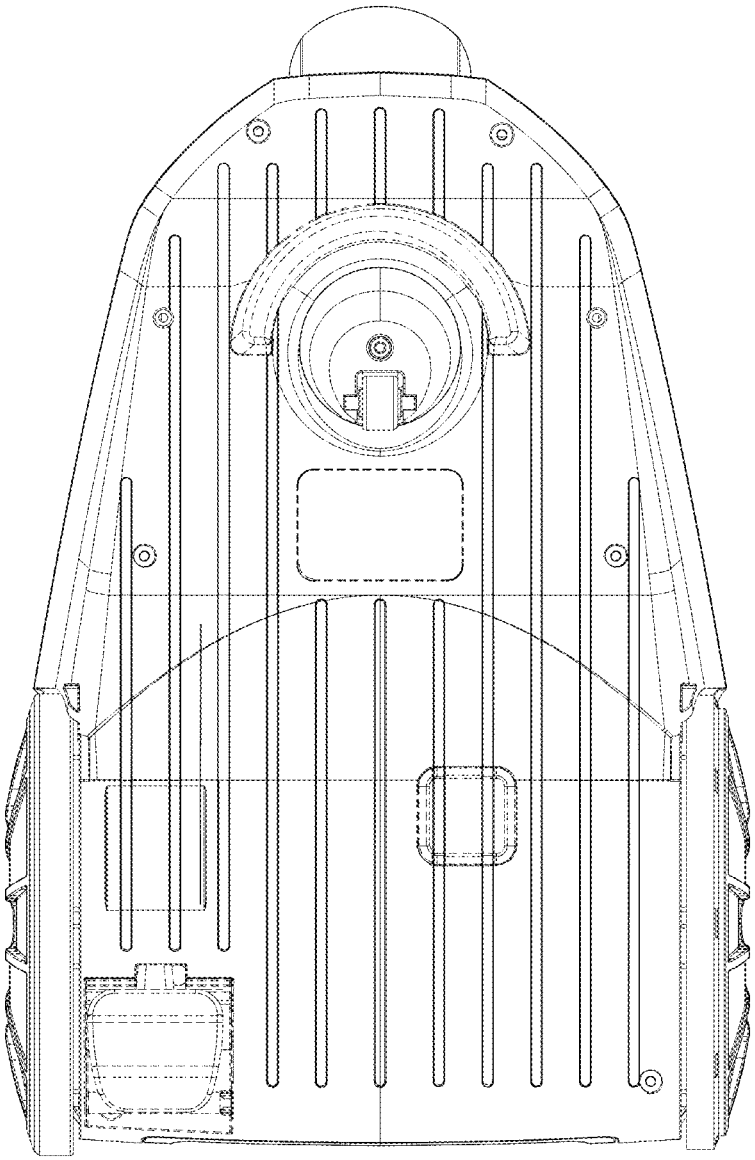

FIG. 6

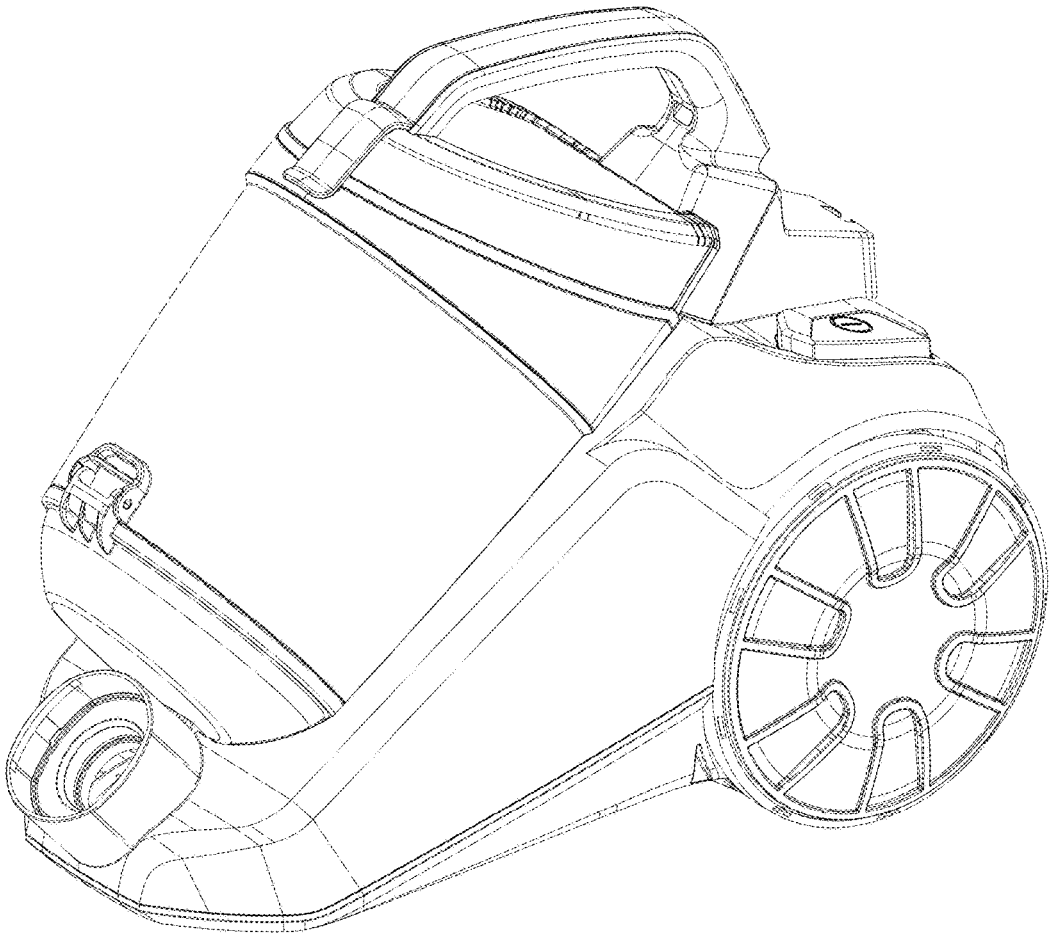

FIG. 7

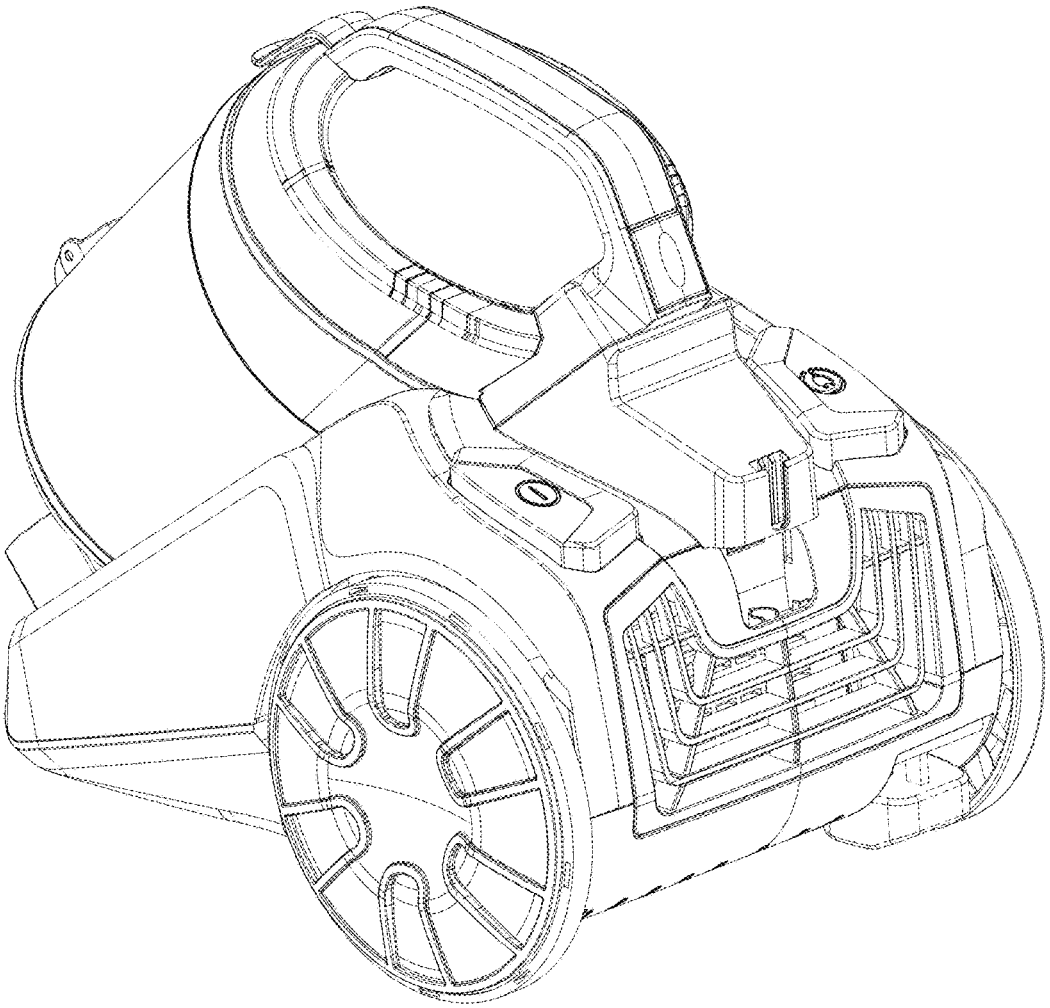

FIG. 8