E. J. BLOOM.

MIXING VALVE.

APPLICATION FILED DEC. 26, 1913

1,122,848.

Patented Dec. 29, 1914.

2 SHEETS—SHEET 1.

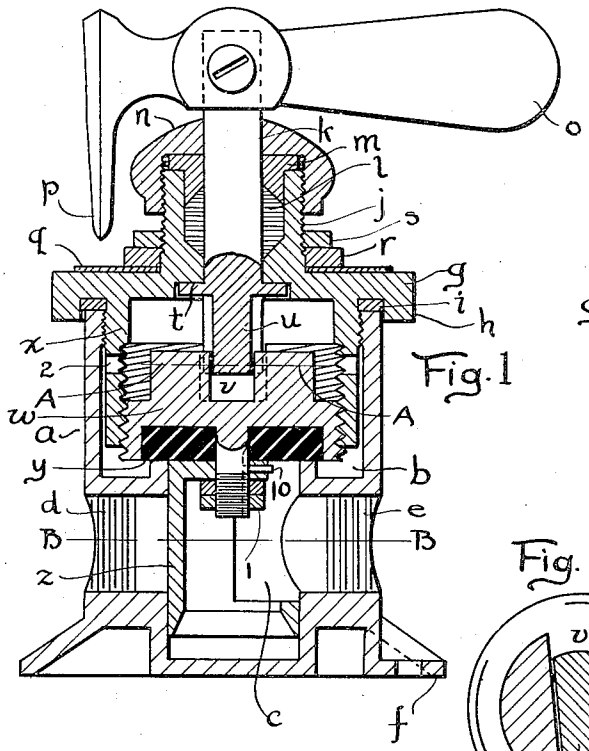

Fig. 1

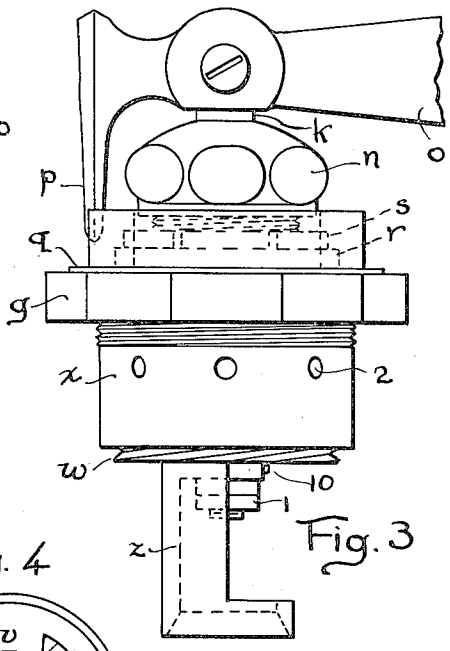

Fig. 3

Fig. 4

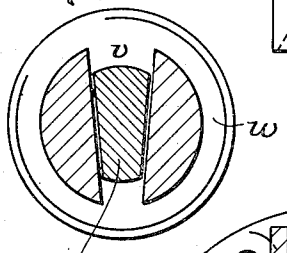

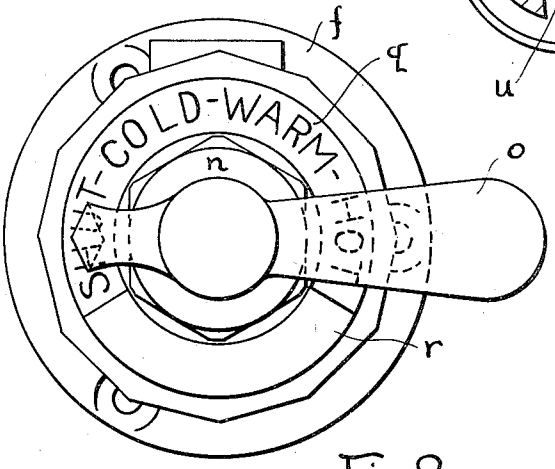

Fig. 2

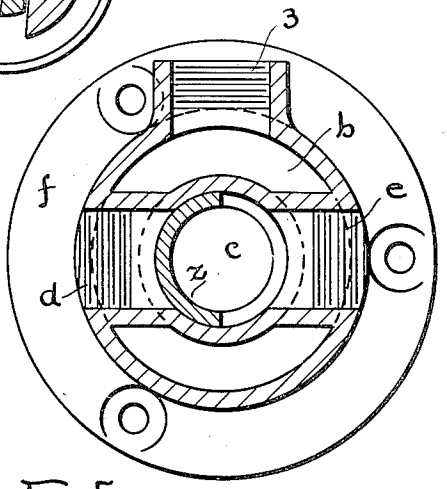

Fig. 5

WITNESSES

Robert N. [illegible]

Virginia C. Spratt

INVENTOR

Edgar J. Bloom

BY

Kalzemond A. Parker

ATTORNEY

E. J. BLOOM.

MIXING VALVE.

APPLICATION FILED DEC 26, 1913.

1,122,848.

Patented Dec. 29, 1914.

2 SHEETS—SHEET 2.

Fig. 6

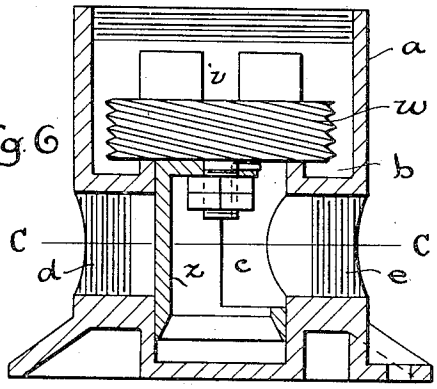

Fig. 8

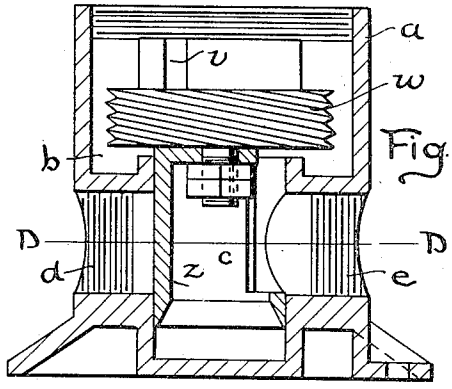

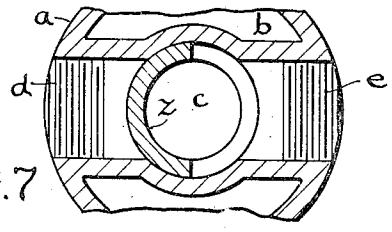

Fig. 7

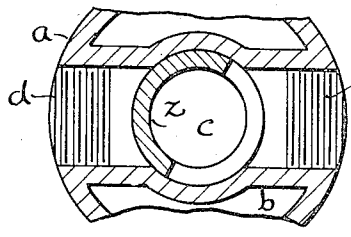

Fig. 9

Fig. 10

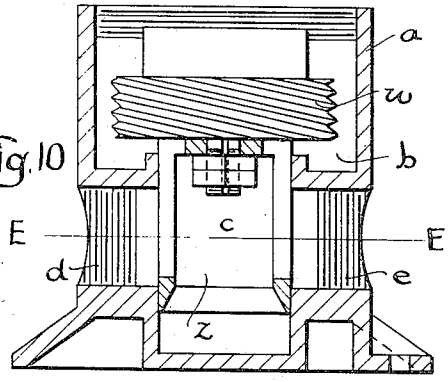

Fig. 12

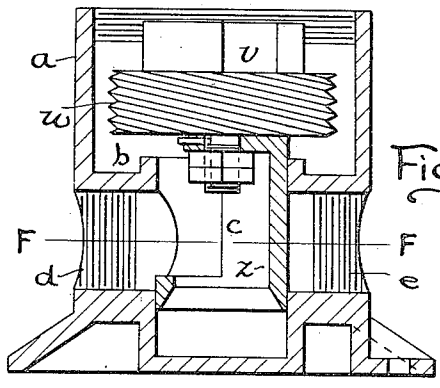

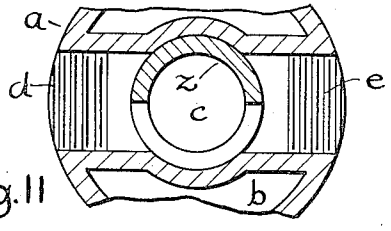

Fig. 11

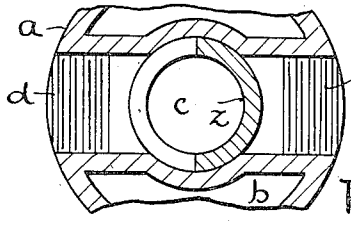

Fig. 13

WITNESSES

Hubert N. Van Deusen

Virginia C. Spratt.

INVENTOR

Edgar J. Bloom

BY

Ralzemond A. Parker,

ATTORNEY

UNITED STATES PATENT OFFICE.

EDGAR J. BLOOM, OF TIFFIN, OHIO.

MIXING-VALVE.

1,122,848. Specification of Letters Patent. Patented Dec. 29, 1914.

Application filed December 26, 1913. Serial No. 808,675.

To all whom it may concern:

Be it known that I, EDGAR J. BLOOM, a citizen of the United States, residing at Tiffin, county of Seneca, State of Ohio, have invented a certain new and useful Improvement in Mixing-Valves, and declare the following to be a full, clear, and exact description of the same, such as will enable others skilled in the art to which it pertains to make and use the same, reference being had to the accompanying drawings, which form a part of this specification.

This invention relates to hot and cold water mixers.

Among its features are the wiping of the valve chamber by both a rotative movement and a longitudinal movement of the valve; the exclusion of the hot water from the packing upon the valve when the valve is entirely closed; the arrangement of the parts in a compact and concentric relation; and an adjustable stop to regulate the opening of the valve.

In the drawings,—Figure 1, is a longitudinal section. Fig. 2, is a front elevation. Fig. 3, is an elevation with the casing removed. Fig. 4, is a section on the line A—A of Fig. 1. Fig. 5, is a section on the line B—B of Fig. 1. Fig. 6, is a sectional view of the casing showing the valve closed. Fig. 7, is a cross-section on the line C—C of Fig. 6. Fig. 8, is a sectional view of the casing showing the valve open. Fig. 9, is a cross-section on the line D—D of Fig. 8. These latter two figures show the cold water passage completely opened. Fig. 10, is a sectional view showing the valve open and in position to get a half-and-half mixture. Fig. 11, is a cross-section on the line E—E of Fig. 10. Fig. 12, is a sectional view showing the valve open and in position to give full passage to the hot water alone. Fig. 13, is a cross-section on the line F—F of Fig. 12.

The casing is designated *a* and comprises a cylindrical casting forming a mixing chamber *b* at one end and a cylindrical concentric valve chamber *c* of smaller diameter at the other end. Hot and cold passageways *d* and *e* respectively lead into the valve chamber on diametrically opposite sides. The end of the casing flares out in the form of flange *f* by which the valve may be attached to the wall or other support. A cap *g* screws on to threads on the interior of the casing and is provided with an overhanging annular flange *h* which forms a recess to hold the rubber packing ring *i*, the latter of which is forced against the end of the casing *a* when the cap is screwed down tightly. The cap is also provided with an integral neck *j*. Through this neck passes a valve stem *k*. Another packing member *l* is contained in the neck and about the stem *k*. The packing gland *m* has a wedge-shaped surface adjacent this packing member and when the smaller cap *n* is screwed on to the threads at the exterior of the neck this packing gland jams the packing member *l* and forces it tightly against the valve stem *k*.

A handle *o* is attached to the end of the valve stem *k* and is provided with a pointer *p* which travels around the dial *q* which is lettered to indicate "Shut"—"Cold"—"Warm"—and "Hot." A segment is raised on a ring *r* to form a stop for the pointer and hence to limit the travel of the valve. The segment and ring may be easily adjusted by loosening the jam nut *s* turning the segment and ring to the position desired and then again tightening the jam nut. The dial is either screwed or soldered to the cap *q*.

The shoulder *t* on the valve stem prevents the valve stem being withdrawn from the valve except by disassembling the parts. The key-like end *u* of the valve stem fits into a key-like slot *v* in the end of the valve *w*. The valve or seat-plug *w* is screw-threaded with threads of a steep pitch so that the lifting action or closing action is quick. These threads engage with threads in the interior of the inverted cup *x* which is an integral part of the cap *g*. The valve or seat-plug *w* is provided with a packing washer *y* which engages with the end of the valve cylinder *c* so as to prevent leakage therethrough when the valve is closed.

A second valve *z* is fitted into the valve chamber *c* and fastened to the valve *w* by a stud-like portion that protrudes from the valve *w* and which is screw-threaded to receive the nuts 1. The stud-like portion that protrudes from the valve *w* and which is screw-threaded to receive the nuts 1 is also

flattened on one side of same and the part cylinder *z* has a pin 10 sweat-soldered in same to match this flattened portion so as to act as a guide in pulling on the member *z*. The valve *z* is a half cylinder preferably entirely closed at its free end and only partially closed at its attached end. This latter construction gives a passageway for the water from the valve chamber to the mixing chamber when the valve *w* is lifted.

The ports 2 in the cup *x* are drainer holes which prevent the forming of a water cushion above the valve or seat plug *w*.

The operation of the device is as follows: When the handle *o* is turned the seat-plug *w* is revolved causing it to be lifted off the top of the valve chamber *c*. A passageway into the mixing chamber is afforded (Fig. 8) and the cold water passageway *e* is still wide open. Further turning of the handle brings the parts into a position shown in Figs. 10 and 11 wherein the seat-plug is lifted well off from the valve seat and the valve *z* is in position to give a half-and-half supply of cold and hot water. A further turn of the valve will bring the parts in position shown in Figs. 12 and 13, wherein the cold water is completely shut off and the hot water is free to flow in its full volume into the mixing chamber. Of course it will be understood that any degree of mixture can be obtained by stopping at the theoretically unlimited number of stops that can be made in the turn.

One of the great difficulties met with in mixing valves is the depositing of lime and other extraneous material upon the walls of the valve chamber. Corrosion is also another difficulty met with. My valve eliminates these difficulties by reason of its wiping action. The sharp edges of the side walls of the valve *z* scrape any deposits off of the walls in the rotative movement and the lower edge of the valve *z* and the walls of the valve tend to wipe the valve chamber walls of the valve during the combined rotative and lifting movement.

It will be noticed by referring to Figs. 6 and 7 that when the valve is closed only the cold water pours into the valve chamber and comes in contact with the washer *y*. This cold water is very much less injurious to the washer than the hot water would be.

The valve *z* does not tend to restrict the water flow through the passages *e* and *d*. It is hollow and of sufficient size to carry a full volume of water equal to the complete flow through either pipe.

By simply unscrewing the cap *g* all of the packing about the valve stem and the regulator may be removed as a unit including the valve stem.

In the drawings I have shown only one outlet 3 from the mixing chamber, though it will be understood that one or more might be used.

What I claim is:

1. A mixing valve having in combination a casing, hot and cold water passageways leading thereinto, and a double valve comprising a seat-plug and a portion of a cylinder, the seat-plug being adapted to lift off from its seat to admit of the discharge of the water and the portion of the cylinder adapted to regulate the mixture by its rotative movement, substantially as described.

2. A mixing valve having in combination a casing, hot and cold water passages leading thereinto, a valve chamber formed at one end of the valve casing interiorly thereof and receiving the discharge from the said two passageways, and a duplex valve comprising a seat plug for closing the end of the valve chamber and a portion of a cylinder fitted into the valve casing and regulating the mixture by revolving in the valve chamber, substantially as described.

3. In a mixing valve, the combination of a cylindrical valve chamber provided with three openings, two of which are in the sides and serve for the hot and cold water inlets, and a part-cylinder valve rotatable in said cylindrical valve chamber to close with its periphery either hot or cold water inlet and also to vary the mixture coming through the two inlets.

4. A mixing valve having in combination a casing provided with a valve chamber in one end formed by a cylinder, passageways leading through the valve casing into the valve chamber, and a valve having a screw-threaded mounting in the opposite end of said casing and comprising a seat plug that closes the end of the valve chamber and an extension in the form of a half cylinder for regulating the mixture and that revolves and lifts in the valve chamber, substantially as described.

5. A mixing valve having in combination a casing provided with a concentric cylinder in one end dividing the casing into a valve chamber and a mixing chamber, passageways leading into the valve chamber and a valve comprising a seat-plug having a screw-threaded mounting in the mixing chamber and that acts as a closure for the end of the valve chamber and an extension in the form of a half cylinder for regulating the mixture and that revolves and lifts in said valve chamber when the seat plug is screwed in or out, substantially as described.

6. A mixing valve, having in combination a casing provided with threads on its interior at one end, passageways leading into said casing, a cap provided with an annular overhanging flange, a packing ring con-

fined by the annular overhanging flange and adapted to be impinged against the end of the casing, the said cap being also provided with an integral cup having exterior screw threads that engage with screw threads in the inside of the casing, the said cup being provided with interior screw threads and a valve having screw threads engaging with the screw threads of the said cup, said valve being adapted to regulate the mixing within the casing.

In testimony whereof, I sign this specification in the presence of two witnesses.

EDGAR J. BLOOM.

Witnesses:
CLYDE CARTER,
JAMES D. WATSON.

Copies of this patent may be obtained for five cents each, by addressing the "Commissioner of Patents, Washington, D. C."