Feb. 16, 1965 L. J. VELTHUIS 3,169,375

ROTARY ENGINES OR PUMPS

Filed Jan. 10, 1963 2 Sheets-Sheet 1

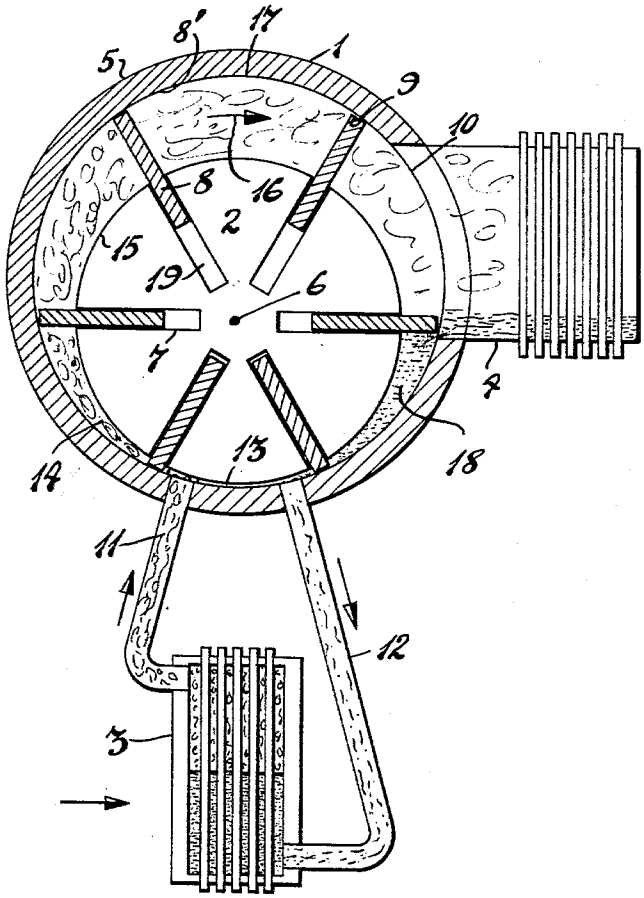

FIG 1

INVENTOR: Lucas J. Velthuis

BY

CECIL C. KENT

HIS ATTORNEY

Feb. 16, 1965 L. J. VELTHUIS 3,169,375

ROTARY ENGINES OR PUMPS

Filed Jan. 10, 1963 2 Sheets-Sheet 2

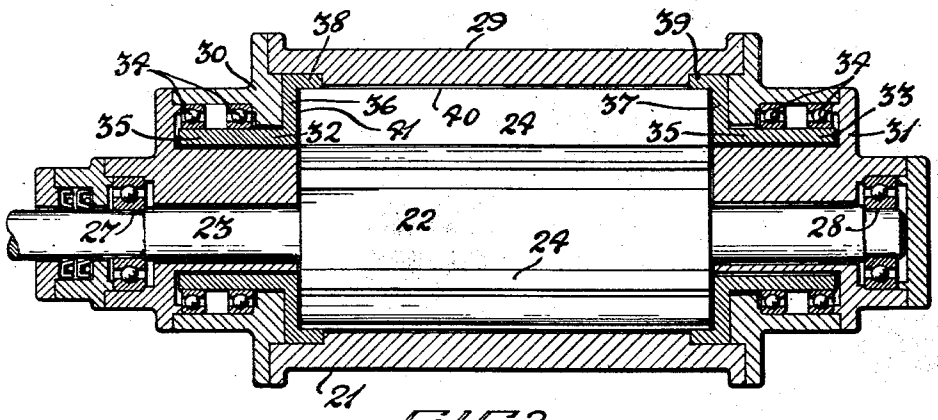

FIG. 2

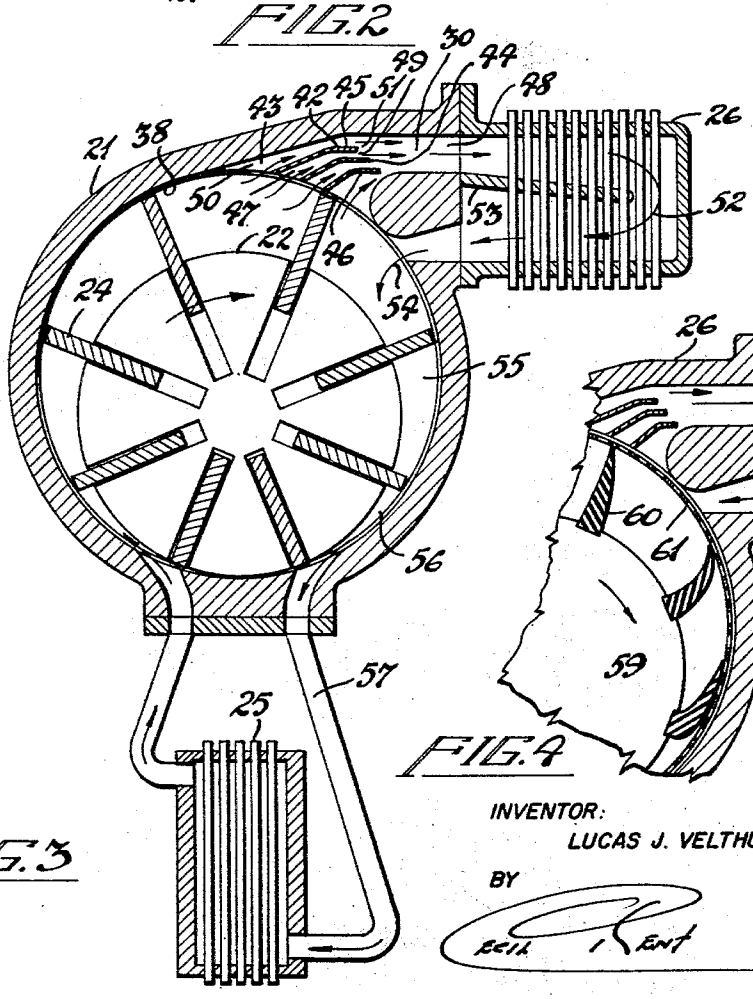

FIG. 3

FIG. 4

INVENTOR:
LUCAS J. VELTHUIS

BY

HIS ATTORNEY

United States Patent Office 3,169,375 Patented Feb. 16, 1965

3,169,375

ROTARY ENGINES OR PUMPS

Lucas J. Velthuis, P.O. Box 160, Colborne, Ontario, Canada

Filed Jan. 10, 1963, Ser. No. 250,582
15 Claims. (Cl. 60—108)

The present invention relates to rotary engines or pumps (to which latter the inventive concept may in large measure apply), a principal object being to provide a prime mover of the character herewithin described which operates on the principle of a closed cycle with respect to the propellant employed, and is of simple construction, employing few moving parts, but adapted to deliver power of a high-efficiency ratio.

A further object of the present invention is to provide a device of the character herewithin described by means of which the necessity for internal lubrication is substantially or wholly eliminated due to the provision of an element designed to move with the vanes of an associated rotor whereby frictional contact with the enclosing stator is eliminated.

With the foregoing objects in view, and such other objects as may become apparent as this specification proceeds, the present invention consists in the following arrangement and construction of parts, all as hereinafter more particularly described, reference being had to the accompanying figures in which:

FIGURE 1 is a cross sectional elevation of a basic exemplification of the present invention.

FIGURE 2 is a longitudinal cross section of an improved modification of the embodiment of FIGURE 1.

FIGURE 3 is an enlarged section of the embodiment of FIGURE 2 at right angles thereto.

FIGURE 4 is a fragmentary representation of a modification of the inventive concept of FIGURES 2 and 3 as intended to be employed with deformable vanes.

The present invention consists, of the combination of four primary parts, that is to say, a stator collectively designated 1, a rotor collectively designated 2 therewithin, a generator collectively designated 3, and a condenser collectively designated 4, although the inventive principle herein disclosed may be employed without condenser 4. It also consists in the combination of a rotary engine and a pair of rotating flanges (or a perforated sleeve), together with similarly rotatable side-walls, all as more fully described hereinafter.

Stator 1 is in the form of a cylinder either with a narrow surrounding wall 5, or with a wide surround wall exceeding to any extent desired, the diameter of said stator, rotor 2 is eccentrically positioned within stator 1, being designed to rotate about axis 6. Positioned in radial slots 7 within the rotor body, are vanes 8 adapted to move radially outwards under the influence of centrifugal force and contact the inner surface 8' of stator 1 the outer edges 9 thereof, it being understood however that the vanes are prevented from projecting beyond surface 8' in virtue of the shoulders 10 where these are situated.

High pressure energy may be created in the body of propelling fluid while within generator 3 by any suitable means, it being understood however that such propelling fluid and generator may be of any form. The engine here being described operates on a closed cycle by which is meant that the propellant is constantly recirculated and raised from low pressure to high pressure. Nevertheless, some loss should be allowed for, and likewise, some replenishment.

High pressure fluid proceeds through intake passage 11 and is returned for reactivation through passage 12, both these passages communicating with the interior of

stator 1 upon the surrounding wall 5 thereof and on either side of the locus of minimum distance 13 between stator and rotor, it being understood that rotor 2 revolves about axis 6.

Condenser 4 is perferably located where indicated and may take any form such as is found suitable for dissipating the remaining energy in the propellant, thereby facilitating its compression and hence forced return to a generator 3 through passage 12. Thus, assuming the propellant to be water, and generator 3 a boiler, it will be apparent that as propellant enters the chambers 14 bounded by the projecting vanes 8, the inner surface 8' and the outer circumferential surface 15 of rotor 2 same will force the rotor to rotate, and the vanes to proceed clockwise as indicated by arrow 16 during which time chambers 14 will enlarge in area to the locus of maximum distance 17 between stator and rotor, which locus is diametrically opposite the locus 13 aforesaid.

As each chamber 14 rotates beyond the locus 17, it will gradually diminish in volume and the propellant will be gradually compressed and forced out into the interior of condenser 4. As it changes into low pressure vapour (still assuming it to be water) it gravitates downwardly and outwardly from the condenser to be captured by the particular vane which is moving between the condenser and return passage 12. Propellant in the chamber 14 in the position aforesaid (specifically the chamber designated 18 in the accompanying FIGURE 1) is subjected to increasing pressure, and hence forced downwardly through passage 12 under considerable pressure to return as low energy propellant to generator 3. Vanes 8 may if desired be forced outwardly by spring means positioned in the spaces 19.

Proceeding now to describe the embodiment of the invention illustrated in the accompanying FIGURES 2 and 3, a cylindrical stator collectively designated 21 is provided, and an eccentrically positioned rotor collectively designated 22 is journalled for rotation therewithin upon the main shaft 23. A set of eight centrifugally biassed vanes 24 similar to those of the embodiment of the accompanying FIGURE 1 are provided. The generator collectively designated 25 is essentially similar to that of the first embodiment, as is also the condenser collectively designated 26 subject to the slight change in the position thereof relative to generator 25, and certain other structural modifications to be described hereinafter.

Main shaft 23 is journalled for rotation upon the races 27 and 28. Closing the cylindrical portion 29 of stator 21 at the ends of such cylindrical portions are end wall structures collectively designated 30 and 31.

Within these end wall structures are rotatable side-wall assemblies collectively designated 32 and 33 journalled upon the four sets of races 34.

The side-wall structures 32 and 33 each comprise the collar portions 35, the side walls proper 36 and 37, together with the pair of opposed annular flanges 38 and 39.

Flanges 38 and 39 are of an internal diameter which is less than the internal diameter of the cylindrical portion 29 of stator 21 by only a few thousandths of an inch, and possibly only one or two thousandths, while conceivably even less than this. It will also be most clearly apparent from the accompanying FIGURE 2 that the said flanges engage the outer edges 40 of vanes 24 in the vicinity of the outer ends thereof, or, in other words, in the vicinity of the flanking edges 41 of said blades (which flanking edges should also be spaced very slightly from the adjacent faces of the side-walls 36 and 37).

From what has been stated it will be apparent from a contemplation of the accompanying FIGURE 3 that contact of the ends of blades 24 with flanges 38 and 39 will cause rotation of the latter with the former but at a

slightly different speed. The relative difference however will be very slight with the result that friction between the blade edges and the said flanges will be insignificant.

By best reference to the accompanying FIGURE 3 it will also be observed that a modified means for discharge of propellant into condenser 26 has been designed. A set of spaced baffle-plate 42 span the opening 43 between end wall structures 30 and 31 (outside the path of travel of side-walls 36 and 37 of course). These baffle-plates are in spaced and lapped relationship such that plate 44 projects beyond plate 45 and plate 46 projectss beyond plate 44.

The plates therefore act in the manner of four elongated venturis. Additionally, the fact that the several plates are in overlapping descending array also, insures that a partial vacuum exists in the vicinity of the superjacent edge. By this arrangement, propellant entering space 50 (for instance) and being discharged into throat 48 at locus 51, assists the intake of propellant into space 47 due to the area of low pressure at 49; in its turn, the propellant entering space 47 assists the intake of same into the next venturi, and so on.

Propellant proceeds through the condenser 26 as indicated by arrow 52 in virtue of the major baffle-plate 53, to be discharged as indicated by arrow 54 in the form of low pressure vapor for example, and returned via the chambers 55 and 56 to generator 25 via passageway 57 in the manner which has already been detailed in connection with the first embodiment of the present invention.

In the embodiment of FIGURE 4, there has been fragmentarily depicted a stator collectively designated 58, and rotor 59, from which latter is intended to project a set of radially disposed but deformable vanes 60 of rubber or the like. In view of the fact that these are not nested within radial slots in the rotor, and hence cannot be forced radially and centripedally during the rotation of the rotor, vanes 60 must distort as depicted. This in turn means that a pair of flanges such as 38 and 39 will not suffice to eliminate friction between the blade tips and the inner surface of the surrounding stator. Accordingly there is provided, instead of a pair of flanges as aforesaid, a cylindrical and perforated sleeve collectively designated 61. This sleeve is free to rotate as are the flanges 38 and 39 however, and may be journalled for such rotation in substantially the manner which has already been described, it being also understood of course that side-walls such as 36 and 37 should preferably be provided. Obviously, the perforations in the sleeve 61 are for the purpose of permitting ingress and egress of propellant with respect to the associated generator and condenser.

Since various modifications can be made in the invention hereinbefore described, and as illustrated in the accompanying drawings, and numerous variations made thereto all within the spirit and scope of the invention without departing from such spirit and scope, it is intended that the said description and drawings are to be interpreted as illustrated only, and not in a limiting sense, and that only such limitations should be placed upon my invention as are specifically contained in the definition thereof as expressed in the accompanying claims.

What I claim as my invention is:

1. A rotary engine comprising in combination, a stator, a rotor, eccentrically positioned therein, and a generator, said rotor including a set of centrifugally biassed radially disposed, equispaced vanes, said generator having intake and return passages communicating with the interior of said stator on either side of the locus of minimum distance between said stator and rotor via intake and return parts in said stator one side being the intake side and the other the exhaust side, and means for returning low-pressure propellant to said generator the space between said ports being less than the space between three adjacent vanes measured upon the circumference of said rotor.

2. The engine according to claim 1 which includes a condenser communicating with said stator spaced from the location at which said generator communicates as stated.

3. The engine according to claim 2 in which said intake passage communicates with said stator on the intake side of said locus, said return passage communicating with said stator on the said exhaust side thereof.

4. The engine according to claim 3 in which said condenser communicates with said stator on the exhaust side of said locus of minimum distance.

5. The engine according to claim 4 in which said return passage communicates with said stator between said generator and said condenser.

6. The engine according to claim 2 which includes rotatable means for maintaining at least the greater part of the length of the outer edges of said blades spaced from the inner surface of said stator.

7. A rotary engine comprising in combination, a stator, a rotor, eccentrically positioned therein, and a generator, said rotor including a set of centrifugally biassed vanes, said generator having intake and return passages communicating with the interior of said stator on either side of the locus of minimum distance between said stator and rotor one side being the intake side and the other the exhaust side, means for returning low-pressure propellant to said generator, and rotatable means for maintaining at least the greater part of the length of the outer edges of said vanes spaced from the inner surface of said stator.

8. The engine according to claim 7 in which said means includes side-walls between the ends of said stator and rotor.

9. The engine according to claim 6 in which said means includes rotatable side-walls between the ends of said stator and rotor.

10. The engine according to claim 5 in which said vanes are mounted for radial centrifugal movement and which includes rotatable means for maintaining at least the greater part of the length of the outer edges of said blades spaced from the inner surface of said stator.

11. The rotary engine according to claim 7 in which said means comprise, in combination, a pair of side-walls between the ends of said stator and rotor, a pair of mutually opposed flanges, one of said flanges being secured to each of said walls, said flanges being engageable with a surface-portion of said vanes in the vicinity of their flanking edges, which surface-portion lies substantially parallel to the rotary axis of said rotor.

12. In a rotary engine comprising in combination, a stator and an eccentrically positioned rotor therewithin, the provision of a set of centrifugally biassed, deformable vanes secured to and projecting from said rotor, and a sleeve within said stator surrounding said rotor between the outer edges of said blades and the inner surface of said stator, said sleeve being perforated.

13. A closed-cycle prime mover comprising in combination, a stator, a rotor eccentrically positioned therein, and a closed-circuit generator, said rotor including a set of centrifugally biassed vanes, said generator having intake and return passages communicating with the interior of said stator on either side of the locus of minimum distance between said stator and rotor via intake and return ports in said stator, one side being the intake side and the other the exhaust side, means for returning low-pressure propellant to said generator, and a condenser communicating with said stator via an opening the limits of which extend between approximately 180° and not more than 270° from said intake port.

14. The prime mover according to claim 13 which includes means for maintaining at least the greater part of the length of the outer edges of said vanes spaced from the inner surface of said stator.

15. A closed-cycle prime mover comprising in combination, a stator, a rotor eccentrically positioned therein, a generator and a condenser, said rotor including a set of centrifugally biassed, radially disposed, equi-spaced vanes,

said generator having intake and return passages communicating with the interior of said stator on either side of the locus of minimum distance between said stator and rotor via intake and return ports in said stator, said intake port communicating with said stator on the intake side of said locus, said return port communicating with said stator on the exhaust side thereof, rotatable means for maintaining at least the greater part of the length of the outer edges of said vanes spaced from the inner surface of said stator, said means comprising, in combination, a pair of side-walls between the ends of said stator and rotor, a pair of mutually opposed flanges, one of said flanges being secured to each of said walls, said flanges being engageable with a surface-portion of said vanes in the vicinity of their flanking edges, which surface-portion lies substantially parallel to the rotary axis of

said motor, said condenser communicating with said stator via an opening the limits of which extend between approximately 180° and not more than 270° from said intake port, and a counterflow baffle within said condenser for circulating low-pressure propellant over an extensive course within said condenser.

References Cited by the Examiner

UNITED STATES PATENTS

608,401	8/98	Conti	91—121
933,037	8/09	Hills	91—121
3,057,157	10/62	Close	60—108 X

JULIUS E. WEST, *Primary Examiner.*

ROBERT R. BUNEVICH, *Examiner.*