June 21, 1938. L. WALTER 2,121,063

ELECTRICAL PLUG CONNECTION

Filed Sept. 11, 1934 2 Sheets-Sheet 1

Fig. 1.

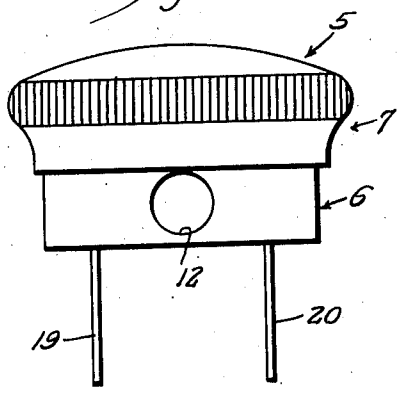

Fig. 4.

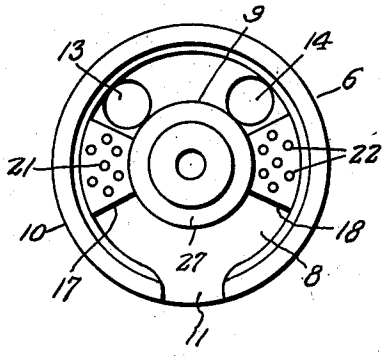

Fig. 2.

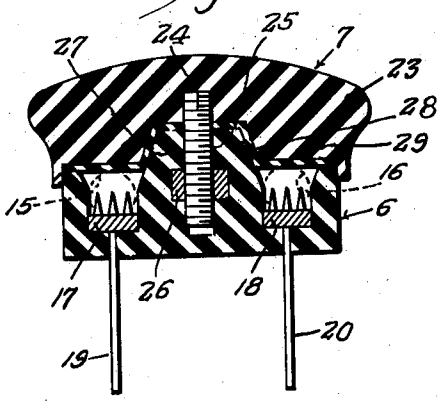

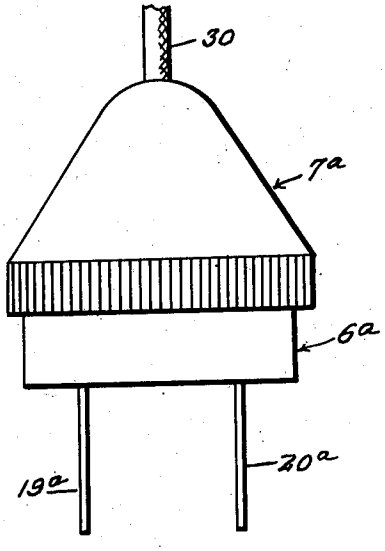

Fig. 5.

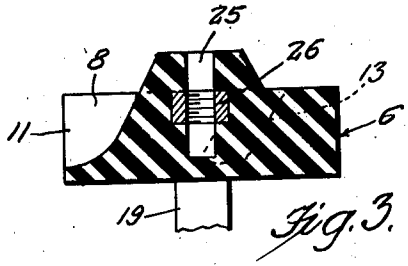

Fig. 3.

Inventor

Lawrence Walter,

By Clarence A. O'Brien

Attorney

June 21, 1938. L. WALTER 2,121,063

ELECTRICAL PLUG CONNECTION

Filed Sept. 11, 1934 2 Sheets-Sheet 2

Fig. 6.

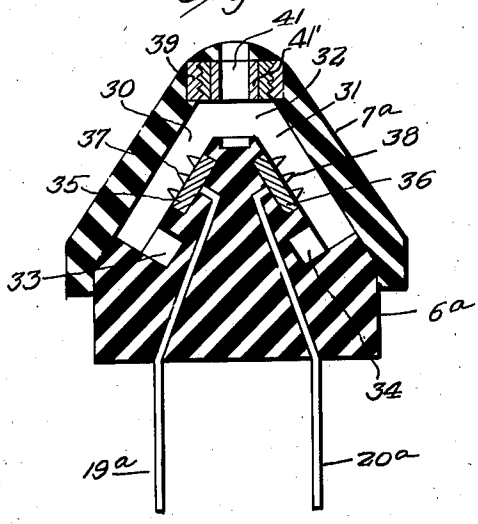

Fig. 7.

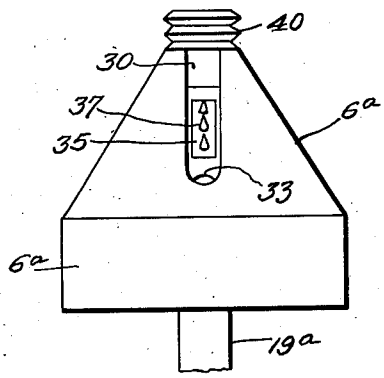

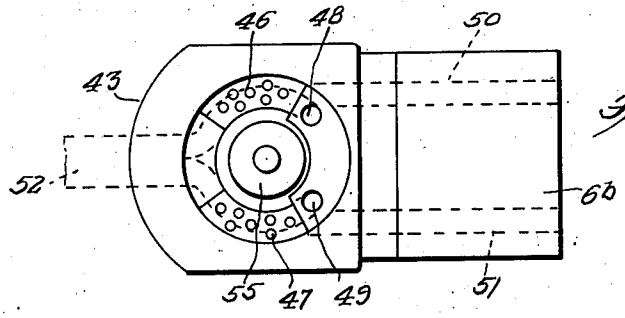

Fig. 8.

Fig. 9.

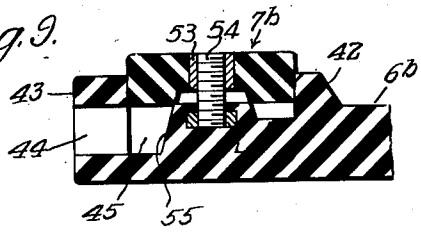

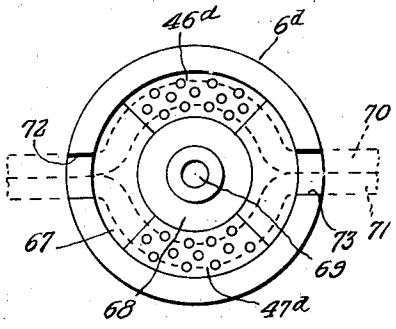

Fig. 10.

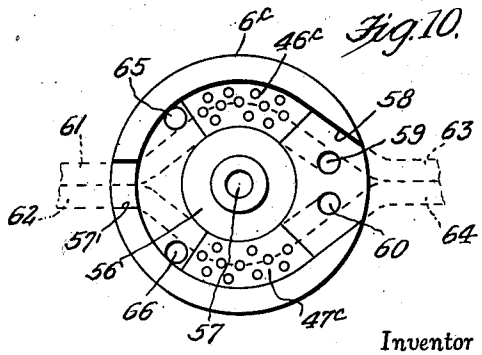

Fig. 11.

Inventor

Lawrence Walter,

By Clarence A. O'Brien

Attorney

Patented June 21, 1938 2,121,063

UNITED STATES PATENT OFFICE

2,121,063

ELECTRICAL PLUG CONNECTION

Lawrence Walter, Albany, Calif.

Application September 11, 1934, Serial No. 743,568

7 Claims. (Cl. 173—361)

My invention relates generally to electrical plug connections and particularly to connections of this type in which the necessary cables or wires may be secured by simple manual manipulations and without the use of tools.

It is also an important object of my invention to provide electrical connection plugs of the type indicated which are simple and inexpensive yet efficient and rugged and which enable connection of the necessary wires or cables thereto in a much more expeditious and electrically satisfactory manner.

It is also an important object of my invention to provide structure in electrical plug connections of the character indicated readily adaptable to different forms of plug connections.

Other objects and advantages of my invention will be apparent from a reading of the following description in connection with the drawings, wherein for purposes of illustration I have shown preferred embodiments of my invention.

In the drawings:

Figure 1 is a side elevational view of one embodiment of the invention.

Figure 2 is a transverse vertical sectional view through Figure 1.

Figure 3 is a transverse vertical sectional view through the plug part taken at approximately right angles to Figure 2.

Figure 4 is a top plan view of Figure 3.

Figure 5 is a side elevational view of another embodiment of the invention.

Figure 6 is a transverse vertical sectional view through Figure 5.

Figure 7 is a side elevational view of the plug part of this embodiment taken approximately at right angles to Figure 6.

Figure 8 is a top plan view of the plug part of another embodiment of my invention.

Figure 9 is a longitudinal vertical sectional view through Figure 8 and

Figures 10 and 11 are plug parts similar to the said parts utilized in the embodiments shown in Figures 8 and 9 but of slightly different arrangement to receive cables or wires.

Referring in detail to the drawings, the numeral 5 generally designates the embodiment shown in Figure 1, and said embodiment comprises the plug part 6 on which is screwed the cap part 7.

The plug part is shown in flat disk form and made of dielectric material, with a circular groove 8 in the top thereof and extending almost to the bottom and defining the cylindrical center portion 9 and the encircling wall 10 which has in one side the opening 11 through which the confined wires or conductors are led.

In the bottom 8 on the opposite side of the plug part is a circumferentially spaced pair of openings 13, 14 through which the individual wires 15, 16, respectively, are introduced into the channel. Between the opening 13 and one side of the opening 11 is a segmental conductor 17 and in a diametrically opposite position is a conductor 18. Each of these conductors has depending from the plate portion thereof a blade 19, 20, respectively, which pass through appropriate openings in the floor 8 to the depending position indicated in the drawings and are so arranged as to be received in a socket plug to which the plug of the invention may be connected. Rising from each conductor 17, 18 is a plurality of staggered spikes 21, 22, respectively.

The insulated wires 15, 16, respectively, are individually led into the plug portion through the openings 13, 14 and bent down around the sides of the channel 8 and laid upon the spikes 21, 22. Then the cap 7 is screwed in place with the result that the wires 15, 16 are forcibly pressed upon the spikes which then penetrate the insulation of the wires and make a perfect electrical connection with each wire.

The cap 7 has a dielectric circular body 23 which has depending therefrom and locked therein a screw 24 which is adapted to enter a plain opening 25 in the center of the plug part 6 and thread into the threaded metallic body 26 which is embedded in the cylindrical portion 9 of the plug part 6. The upper part of the cylindrical portion 9 is tapered as indicated at 27 to cooperate with the tapered socket 28 in the bottom of the cap 7 by means of which the cap 7 is properly centered on and with respect to the plug part 6.

A lining 29 of relatively hard rubber or the like is attached to the lower side of the cap and has portions engaging the exterior of the tapered portion of the plug part and the upper side of the wires 15, 16 as indicated in Figure 2, the material being of such character as will resist cracking and displacement.

The variation shown in Figure 5 is similar to that shown in Figure 1 through 4 except for the cap 7a which is of vertically elongated form rather than flat form and is arranged to pass the cable or conductor composed of the two wires through the upper end of the cap as indicated at 30 rather than through the side of the plug into the opening 12 as obtains in the case of the first described embodiment.

In the embodiment shown in Figures 5, 6 and 7 the plug part 6*a* is generally frusto-conical in form as indicated in Figures 6 and 7 and has at diametrically opposite points grooves 30 and 31 which are connected by a passage 32 at their upper ends, the lower ends of the grooves having communication with radially inset recesses 33, 34. On the radially outward side of the grooves 30 and 31 are inset conductive plates 35, 36 respectively which have the wire impaling spikes 37, 38 and have connected to the back thereof the conductors 19*a* and 20*a* which extend therefrom through the bottom of the plug part and extend in proper position for engaging the outlet socket or receptacle to which the plug connection may be engaged. The cap part 7*a* is hollow frusto-conical in form and has set in the apex thereof the interiorly threaded bushing 39 which is to be threaded on the exteriorly threaded neck 40 which is fastened on the upper end of the front part as shown in Figures 6 and 7. A passage 41 has a bushing 41′ arranged to pass the wires or conductors through the cap part 7*a* into the grooves 30 and 31. When the ends of the wires have been positioned in the grooves 30 and 31 the cap is screwed down farther so as to impale the wires upon the spikes and make the electrical connections with the conductors 19*a* and 20*a*.

In the embodiment shown in Figures 8 and 9 the plug part is a flat elongated body 6*b* having at one end a rising part 42 which is rectangular except for the curved end part 43 which has therein the mouth which opens into the circular channel 45 in diametrically opposite sides on the floor of which are located and embedded the series 46, 47 of conductive spikes. At the right hand of the series of spikes are holes 48, 49 respectively communicating with bores 50 and 51 respectively in the right hand part of the plug portion which bores receive directly the prongs on the appliance which extend to respectively engage the wires inserted in the holes 48, 49. An arrangement of a two wire cable 52 with the respective wires laid upon the series of spikes and the ends thereof inserted in the holes 48 and 49 is shown in dotted lines in Figure 8, the cable passing through the mouth 44.

The cap part 7*b* is a circular dielectric body having a bushing 53 at its center which is interiorly screw threaded to thread on the screw 54 which rises from the frusto-conical center part 55 of the plug part 6*b* as indicated in Figure 9. When the cap part 7*b* is screwed down, the wires having been laid properly in the channels, the wires are impaled on the series of spikes and the electrical connections made.

The embodiment shown in Figure 10 is for connecting the ends of two pairs of wires and consists of a plug part 6*c* which is circular in form and has a channel extending around the top thereof so as to define the upwardly projecting center part 56 in which is arranged a screw 57 to be engaged by a cap part similar to the cap part 17 shown in Figure 9 and to be screwed on the plug part 6*c* to impale the wires on the series of spikes 46*c* and 47*c*. The wall defining the groove is broken by the relatively narrow opening 57′ and a relatively wide tapered opening 58. Adjacent the lateral opening and within the limbs thereof are the holes 59, 60 to receive the ends of the wires 61, 62 which first enter the plug part through the opening 57 and overlie the radially inward part of the device as shown in Figure 10. The other wires 63, 64 lead to the plug part through the opening 58, pass around and at the outside of the wires 61, 62, overlie the outer part of the series of spikes and pass into the holes 65, 66. In this way two pairs of wires and the respective single wires thereof are adequately electrically connected, and the connection may be done quickly and easily simply by laying the wires in place and then screwing the cap part on the plug part.

The embodiment shown in Figure 11 has a plug part 6*d* which is circular and provided with the channel 67 which runs completely around the top thereof providing the part 68 having the screw 69 embedded therein to threadedly engage the cap part in the manner already indicated, a cap part similar to the cap part 7*b* being provided for impaling the wires 70 and 71 on the series of spikes 46*d* and 47*d* respectively which are located at diametrically opposite points on the floor of the channel 67. The walls of the channel have diametrically opposite openings 72, 73 by means of which the wires 70 and 71 pass into opposite sides of the channel 67 and lead out at another side.

Although I have shown and described herein the preferred embodiments of my invention, it is to be definitely understood that I do not desire to limit the application of the invention thereto, and any change or changes may be made to the materials, and in the structure and arrangement of the parts within the spirit of the invention and the scope of the subjoined claims.

Having thus described my invention, what I claim is:

1. A connector of the type described comprising a base formed in its top with a recess, a boss rising from the floor of said recess and having curved sides spaced from opposite sides of said recess so as to define semi-annular wire receiving channels on opposite sides of said boss, one end of said channels merging into a single wire passing opening through the side of said base, the opposite end of said channels leading individually into wire-end receiving bores, an elongated contact lying on the floor of each wire receiving channel on which the corresponding wire is adapted to lie with its end in the corresponding wire-end receiving bore, and a cap screw-threadably connectible to said boss in a manner to compress the wires on said contacts.

2. A connector of the type described comprising a base formed in its top with a recess, a boss rising from the floor of said recess and having curved sides spaced from opposite sides of said recess so as to define semi-annular wire receiving channels on opposite sides of said boss, one end of said channels merging into a single wire passing opening through the side of said base, the opposite end of said channels leading individually into wire-end receiving bores, an elongated contact lying on the floor of each wire receiving channel on which the corresponding wire is adapted to lie with its end in the corresponding wire-end receiving bore, and a cap screw-threadably connectible to said boss in a manner to compress the wires on said contacts, said cap being arranged to close said recess and the tops of said channels.

3. A connector of the type described comprising a base formed in its top with a recess, a tapered boss rising from the floor of said recess and having curved sides spaced from opposite sides of said recess so as to define semi-annular wire receiving channels on opposite sides of said boss, one end of said channels merging into a single

wire passing opening through the side of said base, the opposite end of said channels leading individually into wire-end receiving bores, an elongated contact lying on the floor of each wire receiving channel on which the corresponding wire is adapted to lie with its end in the corresponding wire-end receiving bore, and a cap screw-threadably connectible to said boss in a manner to compress the wires on said contacts, said cap having a tapered opening in its underside receiving the tapered boss when said cap is threaded in place.

4. A connector of the type described comprising a base formed in its top with a recess, a boss rising from the floor of said recess and having curved sides spaced from opposite sides of said recess so as to define semi-annular wire receiving channels on opposite sides of said boss, one end of said channels merging into a single wire passing opening through the side of said base, the opposite end of said channels leading individually into wire-end receiving bores, an elongated contact lying on the floor of each wire receiving channel on which the corresponding wire is adapted to lie with its end in the corresponding wire-end receiving bore, and a cap screw-threadably connectible to said base in a manner to compress the wires on said contacts, said cap having on its underside an annular part arranged to move axially into said recess to engage and compress said wires and close said channels and said wire-end receiving bores, the underside of said cap further having a depending flange for surrounding the upper part of said base when the base and cap are assembled.

5. A connector of the type described comprising a dielectric base provided in its top with an annular channel, a boss rising on the same side of said base concentrically within said annular channel, one side of said channel leading into a wire passing opening formed through the side of the base, another side of said channel having the floor thereof elevated with respect to the bottom of said wire passing opening and formed with a pair of spaced wire-end receiving bores, two opposite sides of said channel between the elevated part and the wire passing opening being provided with elongated contacts lying on the floor thereof, and a cap having annular parts on the underside thereof engageable with wires lying in said two opposite sides of said annular channel on the corresponding contacts, said wires having their ends in said wire-end receiving bores, so as to forcibly engage said wires with said contacts and retain the wire in said bores, a screw extending in and rising axially from said boss and reinforcing the same, and a screw-threaded bore in said cap engageable with said screw to assemble the cap on the base.

6. A connector plug comprising a plug part having a centralized boss on its top and an annular wall surrounding and spaced from said boss, said boss and said annular wall defining a substantially annular wire accommodating channel, said wall being formed with an opening at one side of the plug part through which two wires are led into said channel, the said wires being brought around opposite sides of said boss, contact blades extending from the bottom of said plug part, said blades including shank portions extending through the floor of said channel, said shank portions including segmental plates lying on the floor of opposite sides of said channel, a plurality of wire impaling spikes rising from each of said plates, and a cap part having connective engagement with said boss and having under portions arranged to lie along and across said channel and to compress the wires onto said spikes, the floor of the channel at one side of said plates being formed with a wire end receiving bore for receiving the end of the respective wire, said bores extending substantially at right angles to the floor of the channel.

7. A connector of the type described comprising a base formed in its top with a recess, a boss rising the floor of said recess and having curved sides spaced from opposite sides of said recess so as to define semi-annular wire receiving channels on opposite sides of said boss, one end of said channels merging into a single wire passing opening through the side of said base, the opposite end of said channels leading individually into wire-end receiving bores, an elongated contact lying on the floor of each wire receiving channel on which the corresponding wire is adapted to lie with its end in the corresponding wire-end receiving bore, and a cap screw-threadably connectible to said boss in a manner to compress the wires on said contacts, each of said contacts having staggered spikes rising therefrom to impale the corresponding wire.

LAWRENCE WALTER.