(12) PATENT **(11)** Application No. **AU 199672267 B2**
(19) AUSTRALIAN PATENT OFFICE **(10)** Patent No. **722822**

(54) Title
Game machine and game machine system using the same

(51)[7] International Patent Classification(s)
A63F 009/22

(21) Application No: **199672267** (22) Application Date: **1996.10.09**

(87) WIPO No: **WO97/13565**

(30) Priority Data

(31) Number	(32) Date	(33) Country
7/288006	**1995.10.09**	**JP**
7/328044	**1995.11.22**	**JP**

(43) Publication Date : **1997.04.30**
(43) Publication Journal Date : **1997.06.26**
(44) Accepted Journal Date : **2000.08.10**

(71) Applicant(s)
Nintendo Co., Ltd.

(72) Inventor(s)
Satoshi Nishiumi; Kazuo Koshima

(74) Agent/Attorney
DAVIES COLLISON CAVE,1 Little Collins Street,MELBOURNE VIC 3000

(56) Related Art
JP 6-190147
JP 6-205010
JP 4-26432

OPI DATE 30/04/97 APPLN. ID 72267/96
AOJP DATE 26/06/97 PCT NUMBER PCT/JP96/02927
AU9672267

(51) 国際特許分類6
A63F 9/22

A1

(11) 国際公開番号 WO97/13565

(43) 国際公開日 1997年4月17日(17.04.97)

(21) 国際出願番号 PCT/JP96/02927

(22) 国際出願日 1996年10月9日(09.10.96)

(30) 優先権データ
特願平7/288006 1995年10月9日(09.10.95) JP
特願平7/328044 1995年11月22日(22.11.95) JP

(71) 出願人（米国を除くすべての指定国について）
任天堂株式会社(NINTENDO CO., LTD.)[JP/JP]
〒605 京都府京都市東山区福稲上高松町60番地 Kyoto, (JP)
(72) 発明者；および
(75) 発明者／出願人（米国についてのみ）
西海 聡(NISHIUMI, Satoshi)[JP/JP]
幸嶋一雄(KOSHIMA, Kazuo)[JP/JP]
〒605 京都府京都市東山区福稲上高松町60番地
任天堂株式会社内 Kyoto, (JP)
(74) 代理人
弁理士 山田義人(YAMADA, Yoshito)
〒541 大阪府大阪市中央区伏見町2-6-6
タナベビル Osaka, (JP)

(81) 指定国 AU, BR, CA, CN, KR, MX, US, 欧州特許 (DE, ES, FR, GB, IT, NL, SE).

添付公開書類
国際調査報告書
請求の範囲の補正の期限前であり、補正書受領の際には再公開される。

(54)Title: GAME MACHINE AND GAME MACHINE SYSTEM USING THE SAME

(54)発明の名称 ゲーム機およびそれを用いたゲーム機システム

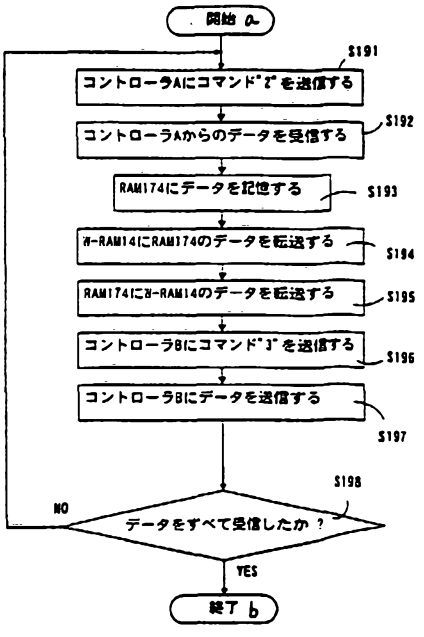

a ... start
b ... end
S191 ... Transmit command "2" to controller A.
S192 ... Receive data from controller A.
S193 ... Store data in RAM 174.
S194 ... Transfer data in RAM 174 to W-RAM 14.
S195 ... Transfer data in W-RAM 14 to RAM 174.
S196 ... Transmit command "3" to controller B.
S197 ... Transmit data to controller B.
S198 ... All data received?

(57) Abstract

A game machine is provided with a controller control circuit including a data transfer control circuit. When the data stored in a first external RAM attached to a first controller are transferred to a second external RAM attached to a second controller, the data transfer control circuit transmits a prescribed command to the first controller. The data stored in the first external RAM are stored in an internal RAM through the data transfer control circuit and the data transfer control circuit transmits a prescribed command to the second controller. In response to the command, the data stored in the internal RAM are transmitted to the second controller and stored in the second external RAM.

ABSTRACT

A game machine is provided with a controller control circuit including a data transfer control circuit. When the data in a first external RAM attached to a first controller is transferred to a second external RAM attached to a second controller, the data transfer control circuit transmits a predetermined command to the first controller. The data stored in the first external RAM is memorize through a data transfer control circuit. The data transfer control circuit then transmits a predetermined command to the second controller. In response thereto, the data stored in the internal RAM is transmitted to the second controller to be stored in the second external RAM.



Game Machine and Game Machine System Using Same

This invention relates to a game machine system having an operating device. More particularly, this invention is concerned with a game machine system including a game machine, such as a personal computer or a video game apparatus, and an operating device (controller) for transmitting and receiving every data to and from the game machine.

Figure 1 is a connection diagram of a conventional game machine (for example, an electronic game apparatus) and a controller. In the figure a CPU 81 (Central Processor Unit) writes data into a W-RAM 83, reads data out of the W-RAM 83 and transmit data to a PPU 84 (Picture Processing Unit), in synchronism with a clock and according to program data stored in a ROM 82 (Read Only Memory), to thereby generate a picture image signal to the PPU 84 based on an image data in a V-RAM 85. The CPU 81 also transmits a clock signal to a controller 90A or 90B to directly receive data such as on switches operated by an operator in synchronism with the clock. The CPU 81 outputs data to PPU 84 so as to cause change in an image signal in accordance with the data inputted from the controller 90A or 90B.

As clear from the above configuration, the game machine and the controllers 90A and 90B are connected therebetween by a data line for receiving operating device data from the controllers 90A and 90B and a clock signal line for transmitting to the controllers 90A and 90B a clock signal for synchronizing timing of transmission of data

AUSTRALIAN PATENT OFFICE

from the controller and timing of operation of the CPU 81. The data line is connected directly to the CPU 81 via an interface (not shown). In other words, in the conventional game machine system, the data of the controllers 90A and 90B are read directly by the CPU 81 itself performing image processing at timing based on the clock. Consequently, the CPU 81 has to directly read the signal from the controllers 90A and 90B, thus increasing the amount of processing by the CPU 81. Furthermore, the CPU 81 has to read the signal from the controller in synchronism with the clock, so that there is a necessity of a clock line, in addition to the data line for transmission and reception of data. To this end, there is increase in the number of pins of a connector for connecting between a cable and the game machine, raising manufacturing cost. Furthermore, the conventional controllers 90A and 90B are each provided with a plurality of switches and transmission is only on data, as to whether an individual switch is depressed or not, to the main-body game machine.

Conventionally, there has required time for which the CPU reads controller data, as the data amount for the controller increases. Thus, the CPU has imposed by increased processing amount.

Moreover, conventionally, the clock signal line is required in addition to the data line for connection between the controller and the game machine. To this end, the number of pins of the connector connecting between the controller and the game machine is increased, and manufacturing cost is expensive.

In addition, among the conventional controllers there has not existed such controller that is excellent in such extendibility that makes possible transmission and reception of various data without limitation to transmission of data on whether or not an individual switch is depressed. Under such circumstances, it has been impossible to realize a variety of methods of use by extending in various ways after purchasing the

AUSTRALIAN PATENT OFFICE

controller.

In accordance with the present invention there is provided a player controller for use in a video game system, said video game system having a main console including a video game processing system for executing a video game program to generate a video game display on a display, said player controller comprising:

a moving object position control mechanism for generating data indicative of the display position of a displayed object and which, in use, is tilted by an operator within a desired range to control movement of a displayed object along any one of a substantially continuous range of angular directions;

detecting circuitry for generating data indicative of the direction and the rate of movement which a displayed object is to be moved;

interface circuitry for sending data indicative of the direction and the rate of movement which a displayed object is to be moved to said video game console and for receiving data and commands from said console;

a plurality of control keys; and

processing circuitry coupled to said interface circuitry for receiving at least one command from said video game processing system and for transferring operation member position data and information relating to the state of at least one of said plurality of control keys to said video processing system in response to said at least one command, wherein said moving object position control mechanism is supported such that it stops at a desired position when not being manipulated by the operator to thereby define a point of origin, said control mechanism being capable of generating operation member position data for controlling movement of a displayed object with respect to a coordinate reference frame defined by said point of origin.

The present invention also provides a player controller for use in a video game system having a main console including a video game processing system for executing a video game program to generate a video game display on a display, said player controller comprising:

AUSTRALIAN PATENT OFFICE

a moving object position control mechanism for generating data indicative of the display position of a displayed object and which, in use, is tilted by an operator within a desired range to control movement of a displayed object along any one of a substantially continuous range of angular directions;

detecting circuitry for generating data indicative of the direction and the rate of movement which a displayed object is to be moved;

interface circuitry for sending data indicative of the direction and the rate of movement which a displayed object is to be moved to said video game console and for receiving data and commands from said console;

a plurality of control keys; and

processing circuitry coupled to said interface circuitry for receiving at least one command from said video game processing system and for transferring operation member position data and information relating to the state of at least one of said plurality of control keys to said video processing system in response to said at least one command, said player controller further including a removable memory which is accessible by said video game system via said interface circuitry for storing video game data, an expansion port located within a cavity in said player controller and electrically coupled to said interface circuitry, and wherein said memory includes a RAM memory sized to fit into said cavity associated with said expansion port embodied and accessible by the video processing system via the expansion port.

The present invention also provides a player controller for use in a video game system having a main console including a video game processing system for executing a video game program to generate a video game display on a display, said player controller comprising:

a moving object position control mechanism for generating data indicative of the display position of a displayed object and which, in use, is tilted by an operator within a desired range to control movement of a displayed object along any one of a substantially continuous range of angular directions;

detecting circuitry for generating data indicative of the direction and the rate of movement which a displayed object is to be moved;

AUSTRALIAN PATENT OFFICE

interface circuitry for sending data indicative of the direction and the rate of movement which a displayed object is to be moved to said video game console and for receiving data and commands from said console;

a plurality of control keys; and

processing circuitry coupled to said interface circuitry for receiving at least one command from said video game processing system and for transferring operation member position data and information relating to the state of at least one of said plurality of control keys to said video processing system in response to said at least one command; and

a liquid crystal display for displaying video game related data in accordance with a video game program.

The present invention also provides a player controller for use in a video game system having a main console including a video game processing system for executing a video game program to generate a video game display on a display, said player controller comprising:

a moving object position control mechanism for generating data indicative of the display position with respect to a coordinate reference frame of a displayed object and which, in use, is tilted by an operator within a desired range to control movement of a displayed object along any one of a substantially continuous range of angular directions;

a plurality of control keys for generating control signals for initiating a control function controlled by said video game processing system;

interface circuitry for exchanging information between said player controller and said console;

a data processor, coupled to said interface circuitry, for controlling the transmission of said data indicative of the display position of a displayed object and said control signals for initiating a control function; and

an expansion device coupled to said data processor, wherein said video game processing system is operable to transfer data to said expansion device, wherein said expansion device includes a removable memory which is accessible by said video game processing system.

AUSTRALIAN PATENT OFFICE

The present invention also provides a player controller for use in a video game system having a main console including a video game processing system for executing a video game program to generate a video game display on a display, said player controller comprising:

a moving object position control mechanism for generating data indicative of the display position with respect to a coordinate reference frame of a displayed object and which, in use, is tilted by an operator within a desired range to control movement of a displayed object along any one of a substantially continuous range of angular directions;

a plurality of control keys for generating control signals for initiating a control function controlled by said video game processing system;

interface circuitry for exchanging information between said player controller and said console;

a data processor, coupled to said interface circuitry, for controlling the transmission of said data indicative of the display position of a displayed object and said control signals for initiating a control function; and

an expansion device coupled to said data processor, wherein said video game processing system is operable to transfer data to said expansion device, wherein said moving object position control mechanism is supported such that it stops at a desired position when not being manipulated by the operator to thereby define a point of origin, said control mechanism being capable of generating operation member position data for controlling movement of a displayed object with respect to a coordinate reference frame defined by said point of origin.

The present invention also provides a player controller for use in a video game system having a main console including a video game processing system for executing a video game program to generate a video game display on a display, said player controller comprising:

a moving object position control mechanism for generating data indicative of the display position with respect to a coordinate reference frame of a displayed object and which, in use, is tilted by an operator within a desired range to control movement of a displayed object along any one of a substantially continuous range of angular directions;

AUSTRALIAN PATENT OFFICE

a plurality of control keys for generating control signals for initiating a control function controlled by said video game processing system;

interface circuitry for exchanging information between said player controller and said console;

a data processor, coupled to said interface circuitry, for controlling the transmission of said data indicative of the display position of a displayed object and said control signals for initiating a control function;

an expansion device coupled to said data processor, wherein said video game processing system is operable to transfer data to said expansion device; and

an expansion port located within a cavity in said player controller and electrically coupled to said interface circuitry, and wherein said memory includes a RAM memory sized to fit into said cavity associated with said expansion port embodied and accessible by the video processing system via the expansion port.

The present invention also provides an external memory system for controlling the operation of a video game system console, said video game system console having a game program executing processing system for executing said video game program to create a display, and at least one player controller having a joystick control member and an insertion port for receiving an expansion module, said video game executing processing system responding to data generated by said player controller to modify said display, said external memory system comprising:

a memory media for storing program instructions;

a connector for coupling said program instructions from said memory media to said video game system console;

said program instructions including at least one instruction for causing said game program executing processing system to cause the player controller to transmit to said game program executing processing system an identification of the type of expansion module connected to said player controller, and at least one instruction for causing said game program executing processing system to transfer data to said expansion module coupled to said player controller insertion port.

AUSTRALIAN PATENT OFFICE

The present invention also provides a method for operating a video game system having a program executing processing system and at least one player controller having a joystick control member and an insertion port for receiving an expansion module, and an external memory device for storing a program for controlling the operation of said video game system, said method comprising the steps of:

executing at least one instruction stored in said external memory for causing said program executing processing system to determine the type of expansion module coupled to said player controller;

executing at least one instruction stored in said external memory for causing said program executing processing system to initiate the transfer of data the expansion module of said player controller;

transferring data under the control of said program executing processing system to said player controller;

receiving said data by said player controller under the control of controller processing circuitry; and

coupling said data to said player controller expansion module.

Preferred embodiments of the present invention are hereinafter described, by way of example only, with reference to the accompanying drawings, wherein:

Figure 1 is a block diagram showing briefly a conventional art;

Figure 2 is a schematic illustrative view showing one embodiment of the present invention;

Figure 3 is a block diagram showing in detail a game machine in Figure 2

AUSTRALIAN PATENT OFFICE

embodiment;

Figure 4 is an illustrative view showing a memory map in CPU of Figure 3 embodiment, demonstrating an external memory and a W-RAM incorporated in a cartridge;

Figure 5 is a block diagram showing in detail a controller control circuit in Figure 3 embodiment;

Figure 6 is an illustrative view showing a modulating/demodulating method for data;

Figure 7 is an illustrative view showing a memory map of a RAM in Figure 5;

Figure 8 is a perspective view of a controller of Figure 3 embodiment as viewed from the above;

Figure 9 is a perspective view of the controller of Figure 3 embodiment as viewed from the bottom;

Figure 10 is a perspective view of showing an analog joystick unit capable of being utilized in the embodiment;

Figure 11 is a perspective view showing major portions of Figure 10 unit;

Figure 12 is an exploded perspective view showing major portions of Figure 10 unit

Figure 13 is a sectional illustrative view showing major portions of Figure 10 unit;

Figure 14 is a block diagram showing in detail one example of the controller and an expansion device;

Figure 15 is an illustrative view showing data of the analog joystick and respective buttons of the controller;

Figure 16 is a block diagram showing in detail another example of the controller and an expansion device;

AUSTRALIAN PATENT OFFICE

Figure 17 is a flowchart showing operation of the CPU of Figure 3 embodiment;

Figure 18 is a flowchart showing operation of the bus control circuit of the Figure 3 embodiment;

Figure 19 is a flowchart showing operation of the controller control circuit of Figure 3 embodiment;

Figure 20 is a flowchart showing operation of the controller circuit of Figure 3 embodiment;

Figure 21 is an illustrative view of transmission and reception data by the control circuit when a command "0" is transmitted from the controller control circuit;

Figure 22 is an illustrative view of transmission and reception data by the control circuit when a command "1" is transmitted from the controller control circuit;

Figure 23 is an illustrative view of transmission and reception data by the control circuit when a command "2" is transmitted from the controller control circuit;

Figure 24 is an illustrative view of transmission and reception data by the control circuit when a command "3" is transmitted from the controller control circuit;

Figure 25 is an illustrative view of transmission and reception data by the control circuit when a command "255" is transmitted from the controller control circuit;

Figure 26 is a flowchart showing operation of data copy;

Figure 27 is a flowchart showing a first method of origin point resetting;

Figure 28 is a flowchart showing a second method of origin point resetting;

Figure 29 is an illustrative view showing the correspondence of a physical coordinate of the joystick to a display screen;

Figure 30 is an illustrative view showing the correspondence of the physical coordinate of the joystick to the display screen when resetting an origin point;

AUSTRALIAN PATENT OFFICE

Figure 2 is is an external appearance showing a system arrangement of a game machine system according to one embodiment of the present invention. The game machine system is for example a video game system, which inclusively comprises a game machine 10, a ROM cartridge 20 as one example of an external memory device, a monitor 30 as one example of a display means connected to the game machine10, a controller 40 as one example of an operating device, and a RAM cartridge 50 as one example of an extension device detachably attached to the controller 40. Incidentally, the external memory device stores image data and program data for image processing for games, and audio data for music, effect sound, etc. A CD-ROM or a magnetic disc may alternatively be employed in place of the ROM cartridge. Where the game machine system of this example is applied to a personal computer, an input device such as a keyboard or a mouse is used as the operating means.

Figure 3 is a block diagram of the game machine system of this example. The game machine 10 incorporates therein a central processor unit (hereinafter "CPU") 11 and a bus control circuit 12. The bus control circuit 12 is connected with a cartridge connector 13 for detachably attaching the ROM cartridge 20, as well as a working RAM 14. The bus control circuit 12 is connected with an audio signal generating circuit 15 for outputting an audio signal processed by the CPU 11 and a video signal generating circuit 16 for outputting a video signal, and further with a controller control circuit 17 for serially transferring operating data of one or a plurality of controller(s) 40 and/or data of RAM cartridge(s) 50. The controller control circuit 17 is connected with controller connectors (hereinafter abbreviated as "connectors") 181 - 184 which are to be provided at a front face of the game machine 10. To the connector 18 is detachably connected a connection jack 41 and the controller 40 through a cable 42. Thus, the connection of the controller to

AUSTRALIAN PATENT OFFICE

the connector 181 - 184 places the controller 40 into electric connection to the game machine 10, enabling transmission and reception of data therebetween.

More specifically, the bus control circuit 12 inputs therein a command outputted by a parallel signal from the CPU 11via a bus to parallel-serial convert it for outputting a command by a serial signal to the controller control circuit 17, and converts serial signal data inputted from the controller control circuit 17 into a parallel signal for outputting it to a bus. The data outputted through the bus is subjected to processing by the CPU 11, stored in W-RAM 14, and so on. In other words, the W-RAM 14 is a memory temporary storing the data to be processed by the CPU 11, wherein read-out and write-in of data is possible through the bus control circuit 12.

Figure 4 is a diagrammatic illustration showing memory regions assigned to respective memory spaces. The memory spaces accessible by the CPU via the bus control circuit 12 involves an external memory region of the ROM cartridge 20 and a memory region of the W-RAM 14. Although the ROM cartridge 20 is structured by mounting on a board a ROM stored with data for game processing and accommodating the same board in a housing, the ROM storage data is shown by the external memory region shown in Figure 4. That is, the ROM includes an image data region 201 stored with image data required to cause the game machine 10 to generate image signals for the game, and a program data region 202 stored with program data required for predetermined operation of the CPU 11. In the program data region 202, there fixedly stored are an image display program for performing image display based on image data 201, a time-measuring program for carrying out measurement of time, and a determination program for determining that the cartridge 20 and an extension device 50, hereinafter referred to, are in a predetermined relationship. Incidentally, the details of the time-measuring program and the determination programs will be stated later. On the

AUSTRALIAN PATENT OFFICE

other hand, the memory region of W-RAM 14 includes a region 141 for temporarily storing data representative of an operating state from a control panel.

Figure 5 is a detailed circuit diagram of a controller control circuit 17. The controller control circuit 17 is provided for transmission and reception of data in serial between the bus control circuit 12 and the controller connector 181 - 184, and includes a data transfer control circuit 171, a signal transmitting circuit 172, a signal receiving circuit 173 and a RAM 174 for temporarily storing transmission and reception data. The data transfer control circuit 171 includes a parallel-serial conversion circuit and a serial-parallel conversion circuit for conversion of data format during data transfer, which also performs control of write-in and read-out of the RAM 174. The serial-parallel conversion circuit converts serial data supplied from the bus control circuit 12 into parallel data to provide it to the RAM 174 or the signal transmitting circuit 172. The parallel-serial conversion circuit converts parallel data supplied from the RAM 174 or the signal receiving circuit 173 into serial data to provide it to the bus control circuit 12. The signal transmission circuit 172 converts data for signal read-in control of the controller 40 supplied from the data transfer control circuit 171 and write-in data (parallel data) to the RAM cartridge 50 into serial data, which data is transmitted through a corresponding channel CH1 - CH4 to each of the plurality of controllers 40. The signal receiving circuit 173 receives in serial read-out data, representative of an operating state of each of the controller 40, inputted through a corresponding channel CH1 - CH4 to each of the controller 40 as well as read-out data from the RAM cartridge 50, to convert them into parallel data to provide it to the data transfer control circuit 171.

The signal transmitting circuit 172 and the signal receiving circuit 173 adopt a duty-cycle modulation and demodulation (hereinafter referred to as "modulation/demodulation") method as one example of the modulation/demodulation

AUSTRALIAN PATENT OFFICE

method. The duty-cycle modulation/demodulation method, as shown in Figure 6, is a modulation/demodulation method wherein "1" and "0" are represented by varying a Hi time period and a Lo time period for a signal at a certain interval. Explaining the modulation/demodulation method with more detail, when data to be transmitted in serial is a logical "1" a signal having, within one cycle period T, a high-level period tH rendered longer than a low-level period tL (tH > tL) is transmitted, while when data to be transmitted is a logical "0" a signal having, within one cycle period T, tH rendered shorter than tL (tH < tL) is transmitted.

In the meanwhile, the demodulation method makes sampling on a serial signal received (bit transmission signal) so as to monitor at all times whether the received signal is at a high level or a low level, wherein one cycle is expressed as T = tL + tH provided that time period of low till change to high is tL and time period of high till change to low is tH. In this case, the relation of tL and tH being tL < tH is recognized as logical "1", while tL > tH is recognized as logical "0", thereby achieving demodulation. If the duty-cycle modulation/demodulation method like this is employed, there is no necessity of transmitting data in synchronism with clock, offering an advantage that transmission and reception of data are available with only one signal line. Incidentally, it is natural that if two signal lines are available another modulation/demodulation method may be utilized.

The RAM 174 includes memory regions or memory areas 174a - 174h as shown in a memory map of Figure 7. Specifically, the area 174a is stored with a command for channel 1, while the area 174b is stored with transmission data and reception data for channel 1. The area 174c is stored with a command for channel 2, while the area 174d is stored with transmission data and reception data for channel 2. The area 174e is stored with a command for channel 3, while the area 174f is stored with transmission data and reception data for channel 3. The area 174g is stored with a command for channel 4,

AUSTRALIAN PATENT OFFICE

while the area 174h is stored with transmission data and reception data for channel 4.

Accordingly, the data transfer control circuit 171 operates to write-in control to the RAM 174 data transferred from the bus control circuit 12 or data of operating state of the controller 40 received by the signal receiving circuit 173 or read-out data from the RAM cartridge 50, and read data out of the RAM 174 based on a command from the bus control circuit 12 to transfer it to the bus control circuit 12.

With referring to Figure 8 and Figure 9, the controller 40 of this embodiment shown includes a housing 401 consist of an upper half and a lower half. At both left and right ends of the housing 401, a left grip 402L and a right grip 402R are respectively formed in a manner that the same are protruded toward a front side. An intermediate position between the left grip 402L and the right grip 402R, a center grip 402C is formed in a manner that the same is protruded toward the front side. A cross-direction designation switch 403 which is a digital joystick is formed on a surface of the housing 401 in the vicinity of a base end of the left grip 402L. Action designation switches 404A, 404B, 404C, 404D, 404E and 404F which designate six (6) kinds of actions are respectively formed on the surface of the housing 401 in the vicinity of a base end of the right grip 402R.

An analog joystick 45 which is capable of designating all directions within 360 degrees is formed on the housing 401 in the vicinity of a base end of the center grip 402C. At an approximately central position of the housing 401, a start switch 405 which designates a start of a game is formed. Furthermore, the start switch 405 is positioned at an approximately center of an area surrounded by the switches 403 and 404A to 404F, and the analog joystick 45.

Furthermore, a pair of side surface switches 406L and 406R are formed on a rear surface of the housing 401, and a bottom surface switch 407 is formed at an

AUSTRALIAN PATENT OFFICE

approximately center of the lower half in the vicinity of the base end of the center grip 402C.

A rear surface of the lower half is extended toward direction of a bottom surface, and an opening portion 408 is formed at a tip end thereof. In an interior of the opening portion 408, a connector (not shown) to which an expansion cartridge 50 shown in Figure 4 is connected is provided. Furthermore, a lever 409 for discharging the cartridge 50 inserted into the opening portion 408 is formed at a position of the opening portion 408. In addition, at a side opposite to the lever of the opening portion 408 to which the above described expansion cartridge 50 is inserted, a notch 410 is formed, and the notch 410 secures a space for withdrawing the expansion cartridge 50 in discharging the expansion cartridge 50 with utilizing the lever 409.

Now, with referring to Figure 10 to Figure 13, the analog joystick 45 will be described in detail. The analog joystick 45 is constructed as a joystick unit shown in Figure 19. The joystick unit is sandwiched by the upper half and the lower half of the housing 401. The joystick unit includes a housing formed by a case 451 and a cover 452, and an inner case 453 are accommodated within the housing.

As shown in Figure 11 and Figure 12, the inner case 453 includes a bowl-shaped recess portion 454 formed at a center of the inner case 453, and there are provided with two pairs of support plates 455a and 455b, and 456a and 456b around the recess portion 454 with angle-interval of 90 degrees, and semicircular bearings 457a and 457b, and 458a and 458b are formed on the support plates 455a and 455b, and 456a and 456b, respectively. The bearings 457a and 457b or 458a and 458b are arranged on the same axis line, and axes of the bearings 457a and 457b, and 458a and 458b are at the same height level, and orthogonally intersected to each other. Wheels 459 and 62 having rotation shafts which are orthogonally intersected to each other are rotatably supported at

AUSTRALIAN PATENT OFFICE

a side surface of the inner case 453, and gears 461 are uniformly formed on the respective wheels 459 and 460.

The analog joystick unit further includes swingable members 462 and 463. One swingable member 462 is formed by an arc-like member which is provided with a long hole 464 being made long in a longitudinal direction of the arc-like member, and supporting shafts 465a and 465b are formed at both ends of the swingable member 462, and shaft end portions 467a and 467b respectively having flat surfaces 466a and 466b are extended from the supporting shafts 465a and 465b, and a sector gear 468 is provided on one shaft end portion 467b. The other swingable member 463 is different from the one swingable member 462 in a point that the swingable member 463 is constructed by an arc-like member having a radius of curvature smaller than that of the swingable member 462; however, in other points, the swingable member 463 is constructed in a manner similar to or the same the swingable member 462. That is, a reference numeral 469 denotes a long hole, reference numerals 470a and 470b denote supporting shafts, reference numerals 471a and 471b denote flat surfaces, reference numerals 472a and 472b denote shaft end portions, and a reference numeral 473 denotes a sector gear.

The supporting shafts 465a and 465b, and 470a and 470b are individually inserted into the two sets of bearings 457a and 457b, and 458a and 458b of the inner case 453, and therefore, the part of the swingable members 462 and 463 can be supported in a swing-free fashion, and the swingable members 462 and 463 are arranged in a state where longitudinal directions of the long holes 464 and 469 are orthogonally intersected to each other and overlaid with an interval or gap. In the pair of swingable members 462 and 463 thus attached to the inner case 453, the sector gears 468 and 469 bite the above described gears 461. Furthermore, respective ones of the above described flat surfaces 466a and 466b, and 471a and 471b are included in the same horizontal plain in a neutral state of a

AUSTRALIAN PATENT OFFICE

lever 474 (described later).

As shown in Figure 12, the lever 474 includes protrusions 475 which are protruded toward outer radius directions at one end of the lever 474, and a ball portion 476 at a middle portion of the lever 474, and a connection portion 477 at the other end of the lever 474. Grooves 478 which are extended in a latitude direction at positions apart from each other by 180 degrees are formed on the above described ball portion 476. A diameter of the lever 474 is selected at a size which is not larger than sizes of short directions of the long holes 464 and 469 formed on the swingable members 462 and 463. Preferably, the diameter of the lever 474 is selected at a size by which the lever 474 can be slidably inserted into the long holes 464 and 469 with no shake. Then, the one end portion of the lever 474 is penetrated through the long holes 464 and 469, and the protrusions 475 are fit into the long hole 464 of a lower side swingable member 462. Therefore, the protrusions 475 of the lever 474 become to be protruded in a direction orthogonally intersected to the longitudinal direction of the long hole 469 of an upper swingable member 463 being attached to the inner case 453, and therefore, if the lever 474 is pulled-up, the protrusions 475 are prevented from being slipped-off by the upper swingable member 463.

A mechanical structural portion assembled as shown in Figure 11 is accommodated within the outer case 451 shown in Figure 10. At this time, the inner case 453 is fixed to the outer case 451 by a suitable means such as screws (not shown).

Then, as well seen from Figure 12 there are provided on the inner case 453 photo-interrupters 479 and 480 which are opposite to the two wheels 459 and 460. The photo-interrupters 479 and 480 respectively include light-emitting elements and light-receiving elements (both not shown), and lights emitted by the light-emitting elements are received by the light-receiving elements through slits 481 and 482 respectively formed on the wheels 459 and 460. Therefore, the photo-interrupters 479 and 480 respectively



detect the slits 481 and 482, and in response to the slits 481 and 482, outputs pulse signals according to rotations of the wheels 459 and 460.

In addition, the height level of swing-shafts (supporting shafts 465 and 470) of the swingable members 462 and 463 are coincident with a height level of a center of the ball portion 476 of the lever 474. Furthermore, a printed-circuit board (not shown) to which a flexible wiring plate 483 is connected is assembled in the outer case 451, and the light-emitting elements and the light-receiving elements included in the photo-interrupters 479 and 480 are electrically connected to printed patterns of the board.

As shown in Figure 13, a ring with groove 484 is supported above the flat surfaces 466 and 471 provided on the pair of swingable members 462 and 463, and a coil spring 485 is arranged above the ring with groove 484. The ring with groove 484 is one example of a pushing-down member, and in the neutral state of the lever 474, a lower surface of the ring 484 becomes in horizon, and the lower surface of the ring 484 and the above described flat surfaces 466 and 471 are brought into surface-contact with each other.

As shown in Figure 13, a guide ring 486 is attached to the cover 452, and a circular hole 487 is formed at a center portion of the guide ring 486. The guide ring 486 further includes a guide wall 488 which is a rising slope raised from an inner periphery defining the hole 487 toward an outer periphery of the guide ring 486. That is, the guide wall 488 is formed as a whole in "an earthenware mortar" or "cone"-shape. Then, in viewing the guide wall 488 from above, the guide wall 488 has an outer edge 491 which becomes octagonal as seen from the above.

In addition, a diameter of the hole 487 is selected to a size that is the same or approximately same as a diameter of an outer peripheral surface of the ball portion 476 of the above described lever 474. Therefore, as shown in Figure 13, the inner edge defining the hole 487 is brought into contact with the ball portion 476 of the lever 474, and



therefore, the lever 474 is supported by the ball portion 476 and the hole 487 in a manner that the lever 474 can be swung or inclined in any directions. Furthermore, circular bosses 489 are formed at two positions apart from each other by 180 degrees on the inner edge defining the hole 487 of the guide ring 486 in a manner that the bosses 489 are protruded toward an inner radius direction of the hole 487, and the bosses 489 individually fit into the grooves 478 formed in the latitude direction of the above described ball portion 476. Therefore, the lever 474 can be swung around an axis of the bosses 489, but the lever 474 can not be rotated around the axis of the lever 474 itself. Therefore, the lever 474 is prevented from being rotated around its axis by the grooves 478 of the ball portion 476 and the bosses 489.

Furthermore, if the cover 452 is attached to the case 451, a spring 490 is sandwiched and compressed between the ring with groove 484 and the cover 452. Therefore, the flat surfaces 466 and 471 of the pair of swingable members 462 and 463 are always depressed by a force of the spring 490 via the ring with groove 484, and by such a depressing operation, the pair of swingable members 462 and 463 are always elastically biased so as to become an attitude that both members 462 and 463 are not included in any directions, and therefore, the lever 474 becomes in a vertical attitude, that is, the lever 474 becomes in a state where the lever 474 is always elastically biased into the neutral state thereof.

The lever 474 is provided with an operating knob 492 which is attached to the lever 474 via the connection portion 477. On an upper surface of the operating knob 492, a recess portion 493 is formed such that a finger of the hand can be easily put on the knob 492.

In the above described analog joystick unit, according to an inclined direction and an inclined angle of the lever 474, the swingable members 462 and/or 463 are swung, and



then, the wheels 459 and/or 460 are rotated in accordance with the inclined angle of the swingable members 462 and/or 463, and therefore, pulses according to rotation amounts of the wheels 459 and/or 460 are outputted, and the pulses are utilized as coordinate signals in an X axis and/or Y axis directions.

Figure 14 is a detailed circuit diagram of a controller 40 and a RAM cartridge 50 as one example of an extension device. The controller 40 incorporates within the housing electronic circuits such as operation signal processing circuit 44, etc. in order to detect operating states of the switches 403 - 407 or the joystick 45 or the like and transfer detected data to the controller control circuit 17. The operation signal processing circuit 44 includes a signal receiving circuit 441, a control circuit 442, a switch signal detecting circuit 443, a counter circuit 444, a signal transmitting circuit 445, a joyport control circuit 446, a reset circuit 447 and a NOR gate 448.

The signal receiving circuit 441 converts a serial signal, such as a control signal transmitted from the controller control circuit 17, write-in data to the RAM cartridge 50, etc., into a parallel signal to supply it to the control circuit 442. The control circuit 442 generates a reset signal to cause resetting (0) on measured values of an X-axis counter 444X and a Y-axis counter 444Y included in the counter 444, when the control signal transmitted from the controller control circuit 17 is a reset signal for an X, Y coordinate of the joystick 45. The joystick 45 includes photo-interrupters for X-axis and Y-axis so as to generate the number of pulses proportional to the amount of inclination of a lever in directions of X-axis and Y-axis, providing respective pulse signals to the counters 44X and 444Y. The counter 444X, when the joystick 45 is inclined in the X-axis direction, measures the number of pulses generated in proportion to the amount of inclination. The counter 444Y measures the number of pulses generated in proportion to the amount of inclination, when the joystick 45 is inclined in the Y-axis direction. Accordingly, the

resultant vector, determined by the measured values in X-axis and Y-axis of the counter 444X and the 444Y, determines the direction of movement and the coordinate position for the heroic character or the cursor. Incidentally, the counter 444X and the counter 444Y are also reset of their measured values by a reset signal supplied from the reset signal generating circuit 447 upon turning on the power supply, or a reset signal supplied from the switch signal detecting circuit 443 when the player depresses simultaneously two switches previously determined.

The switch signal detecting circuit 443 responds to an output command signal representing a switch state supplied at a constant period (e.g., at a 1/30-second interval as a frame period of a television) , and reads a signal that is varied by the state of depression of the cross switch 403 and the switches 404A - 404F, 405, 406L, 406R and 407 to supply it to the control circuit 442.

The control circuit 442 responds to a read-out command signal of operating sate data from the controller control circuit 17, and supplies the operating state data on the switches 403 - 407 and the measuring values of the counters 444X, 444Y to the signal transmitting circuit 445 in a predetermined data-format order. The signal transmitting circuit 445 converts these parallel signals outputted from the control circuit 442 into serial data to transfer them to the controller control circuit 17 via a conversion circuit 43 and a signal line 42.

To the control circuit 442 are connected an address bus, a data bus, and a port control circuit 446 through a port connector. The port control circuit 446 performs input-output control (or signal transmission or reception control) on data according to commands by the CPU 11, when the RAM cartridge 50 as one example of an extension device is connected to a port connector 46. The RAM cartridge 50 includes a RAM 51 connected to the address bus and the data bus and a battery 52 connected thereto for



supplying power source to the RAM 51. The RAM 51 is a RAM that has a capacity lower than a half of a maximum memory capacity accessible by using an address bus, and comprised for example of a 256 k-bit RAM. The RAM 51 stores backup data associated with a game, so that, if the RAM cartridge 50 is removed out of the port connector 46, the stored data is kept by receiving power supply from the battery 52.

Figure 15 is a graphical illustration of a data format by which the game machine or image processing apparatus reads out data representative of an operating state of switches 403 - 407 and joystick 45 from the controller 40. The data generated by the controller 40 is configured by 4-byte data. The first-byte data represents B, A, G, START, upper, lower, left and right, i.e., the depression of pressing points for upper, lower, left and right of the switch 404B, 404A, 407, 405 and the cross switch 403. For example, when the button B, i.e., the switch 404B, is depressed, the highest order bit of the first byte becomes "1". Similarly, the second-byte represents JSRST, 0 (not employed in the embodiment), L, R, E, D, C and F, i.e., the depression of the switch 409, 406L, 406R, 404E, 404D, 404C and 404F. The third byte represents by binary digit the X coordinate value (measured value by the X counter 444X) which value is in dependence upon inclination angle of the joystick 45 in the X direction. The fourth byte represents by binary digit the Y coordinate value (measured value by the Y counter 444Y) which value is in dependence upon inclination angle of the joystick 45 in the Y direction. Because the X and Y coordinate values are expressed by 8 bits of binary digit, the conversion of them into decimal digit makes possible representation of the inclination of the joystick 45 by a numeral of from 0 - 255. If the highest order bit is expressed by a signature denoting a negative value, the inclination angle of the joystick 45 can be expressed by a numeral between -128 and 127.

Figure 16 shows an embodiment wherein an extension device 60 including an LCD (Liquid Crystal Display) 62 and an LCD controller 61 is connected to a controller

40. In this embodiment, when the extension device 60 is connected to the connector 46, the LCD controller 61 is electrically connected to the joy port control circuit 446 to be enabled to transmit and receive data. The LCD controller 61 outputs an image signal to the LCD 62 based on data outputted from the joy port control circuit 46. The LCD 62 displays an image picture in accordance with the image signal from the LCD controller 61.

Incidentally, although the extension device 50 including the RAM and the extension device 60 including the LCD 62 were employed, it is possible to utilize an arbitrary extension device that is adapted to transmit and/or receive data to operate.

Explanation will then be made as to transmission and reception of data between the game machine 10 and the controller 40.

Referring first to a flowchart for the CPU of the game machine 10 in Figure 17, explanations will be made on image processing. At a step S11, initial setting is made by the CPU 11 based on an initial value (not shown) stored in the program data area in Figure 5. Then, at a step S12, the CPU 11 outputs a control pad data request command stored in the program data area 202 to the bus control circuit 12. At a step S13, the CPU 11 carries out a predetermined image processing based on the program stored in the program data area 202 and the image data area 201. While the CPU 11 is executing step S13, the bus control circuit 12 is under execution of steps S21 - S24. Then, at a step S14, the CPU 11 outputs image data based on the control pad data stored in the control pad data area 141 in Figure 4. After completing step S14, the CPU repeats to execute steps S12 - S14.

The operation of the bus control circuit 12 will be explained by using Figure 18. At a step S21, the bus control circuit 12 determines whether or not the CPU 11 has outputted a controller data request command (a request command for data on switches of the controller 40 or data on the extension device 50). If no controller data request

command has been outputted, it is waited for outputting. If a controller data request command has been outputted, the process proceeds to a step S22. At the step S22, the bus control circuit 12 outputs a command for reading in data of the controller 40 (command 1 or command 2 referred to later) to the controller control circuit 17. Then, at a step S23, the bus control circuit 12 determines whether or not the controller control circuit 17 has received data from the controller 40 to store it in the RAM 174. If the controller control circuit 17 has not received data from the controller 40 to store in the RAM 174, the bus control circuit 12 waits at the step S23, while if the controller control circuit 17 has received data from the controller 40 to store it in the RAM 174, the process proceeds to a step S24. At the step S24, the bus control circuit 12 transfers the data of the controller 40 stored in the RAM 174 to the W-RAM 14. The bus control circuit 12, when completing the data transfer to the W-RAM 14, returns the process back to the step S21 to repeat execution of the step S21 - the step S24.

Incidentally, the abovestated flowcharts exemplified the example wherein, after the bus control circuit 12 has transferred data from the RAM 174 to the W-RAM 14, the CPU 11 processes the data stored in the W-RAM 14. However, the CPU 11 may directly process the data in the RAM 174 through the bus control circuit 12.

Figure 19 is a flowchart for explaining the operation of the controller control circuit 17. At a step S31, the presence or absence of waiting for write-in by the bus control circuit 12 is determined. If not waited for write-in, the data transfer control circuit 171 waits until there comes to waiting for write-in from the bus control circuit 12. If waiting for write-in, at a next step S32 the data transfer control circuit 171 causes the RAM 174 to store commands for the first to the fourth channels and/or data (hereinafter abbreviated as "command/data"). At a step S33, the command/data for the first channel is transmitted to the controller 40 being connected to the connector 181. The control circuit

442 performs a predetermined operation based on the command/data to output data to be transmitted to the game machine 10. The content of the data will be stated later in explaining the operation of the control circuit 442. At a step S34, the data transfer control circuit 171 receives data outputted from the control circuit 442, to cause the RAM to store the data.

From now on, at a step S35 the command/data for the second channel is transmitted to the controller 40, in a manner similar to the operation for the first channel at the steps S33 and S34. The control circuit 442 performs a predetermined operation based on this command/data to output the data to be transmitted to the game machine 10. At a step S36 are carried out the processes of data transfer and write-in for the second channel. Meanwhile, at a step S37, the command/data for the fourth channel is transmitted to the controller 40. The control circuit 442 performs a predetermined operation based on this command/data to output the data to be transmitted to the game machine 10. At a step S38 are carried out the processes of data transfer and write-in for the third channel. Furthermore, at a step S39, the command/data for the fourth channel is transmitted to the controller 40. The control circuit 442 of the controller 40 performs a predetermined operation based on this command/data to output the data to be transmitted to the game machine 10. At a step S40 are carried out the processes of data transfer and write-in for the fourth channel. At a subsequent step S41, the data transfer circuit 171 transfer in batch the data which have received at the steps S34, S36, S38 and S40 to the bus control circuit 12.

In the manner as stated above, the data for the first channel to the fourth channel, that is, the commands for the controllers 40 being connected to the connectors 181 - 184 and the operating state data to be read out of the controllers 40, are transferred by time-divisional processing between the data transfer control circuit 171 and the control circuit

442 respectively within the controllers 40.

Figure 20 is a flowchart for explaining the operation of the controller circuit 44. First, at a step S51, it is determined whether or not a command has been inputted from the image processing circuit 10 to the control circuit 442. If no command has been inputted, it is waited for inputting of a command. If a command is inputted, at a step S52 it is determined whether or not the command inputted to the control circuit 442 is a status request command (command "0"). If a command "0", the process proceeds to a step S53, wherein a status transmitting process is carried out.

At the step S53, where the CPU 11 outputs the command "0", the data in format as shown in Figure 13 is transmitted and received between the game machine 10 and the controller 40. On this occasion, the control circuit 442, when receiving the command "0" data configured by 1 byte (8 bits), transmits TYPE L (1 byte), TYPE H (1 byte) and the status. Here, TYPE L and TYPE H are data for identifying the function of a device or apparatus being connected to the joyport connector 46, which are inherently recorded in the RAM cartridge 50. This makes possible recognition by the game machine 10 what extension device (e.g., a RAM cartridge 50 or other extension devices such as a liquid crystal display) is being connected to the controller 40. The status is data representative of whether or not an extension device such as a RAM cartridge 50 is being connected to the port and whether or not the connection of the extension device is after resetting.

On the other hand, at the step S52 if the determination is not a command "0", it is determined at a step S54 whether or not the inputted command is a pad-data request command (command "1"). If it is a command "1", the process proceeds to a step S55 where the process of transmitting pad data is performed. Specifically, where the CPU 11 outputs a command "1", the data in format as shown in Figure 14 is transmitted and received between the game machine 10 and the controller 40. On this occasion, the

control circuit 442, if receiving command "1" data configured by 1 byte (8 bits), transmits the data of 14 switches (16 bits) of B, A, G, START, upper, lower, left, right, L, R, E, D, C and F; the data of JSRST (1 bit); and the data of the counter 444X and the counter 444Y (16 bits). By transmitting these data to the game machine 10, the game machine 10 is recognized of how the operator operated the controller 40. Thus, these data are utilized for varying the image by the game machine 10 in accordance with the operating state of the controller 40.

At the aforesaid step S54, if the determination is not a command "1", it is determined at a subsequent step S56 whether or not the inputted command is a read-out request command (command "2") for data associated with the RAM cartridge 50 to be connected to the extension connector. Where the determination is a command "2", the process proceeds to a step S57 where the process of write-out of the extension connector is performed. Specifically, where the CPU 11 outputs a command "2", the data in format as shown in Figure 15 is transmitted and received between the game machine 10 and the controller 40. On this occasion, when the control circuit 442 receives command "2" data configured by 1 byte (8 bits), address H representative of the higher-order bits (8 bits) of address, address L representative of the lower-order bits (3 bits) of address, and address CRC (5 bits) for checking for error in address data transmitted and received, the control circuit 442 transmits data stored in the RAM cartridge (32 bytes) and CRC (8 bits) for checking for data errors. In this manner, the connection of the RAM cartridge 50 (or other extension devices) and the game machine 10 enables the game machine 10 to process data from the RAM cartridge 50, etc.

At the aforesaid step S56, if the determination is not a command "2", it is determined at a subsequent step S58 whether or not the inputted command is a read-in request command (command "3") for information associated with the RAM cartridge 50

being connected to the extension connector 46. Where it is the command "3", the process of data read-out is carried out at a step 59 for the RAM cartridge 50 being connected to the extension connector 46. Specifically, if the CPU 11 outputs a command "3", the data shown in Figure 3 is transmitted and received, in response to the command "3", between the game machine 10 and the controller 40.

That is, when the control circuit 442 receives command "3" data configured by 1 byte (8 bits), address H representative of the higher-order bits of address (8 bits), address L representative of the lower-order bits of address (3 bits), address CRC for checking for error in address data transmitted and received (5 bits), and data to be transmitted to the RAM cartridge 50 (32 bytes), it transmits CRC for checking for error for data received (8 bits). In this manner, the connection of the extension device 50 and the game machine 10 enables the game machine 10 to control the extension device 50. The connection of the extension device 50 and the game machine 10 also drastically improves the function of the controller 40.

If at the aforesaid step S58 the determination is not a command "3", it is determined at a step 60 whether or not it is a reset command (command 255). Where it is the reset command (255), the process of resetting the counter 444 for the joystick 45 is performed at a step S61.

Specifically, where the CPU 11 outputs a command 255, the data shown in Figure 25 is transmitted and received between the game machine 10 and the controller 40. That is, the control circuit 442 of the controller 40, if receiving command 255 data configured by 1 byte (8 bits), outputs a reset signal to reset the X counter 444X and the counter 444Y, and transmits aforesaid TYPE L (1 byte), TYPE H (1 byte) and the status.

The operation by the controller control circuit 17 of transferring data will be explained using the flowchart in Figure 26, wherein the data, stored by a RAM 51 within

an extension device 50 connected to a joy port connector 46 of a controller 40 (controller A) having a connection jack 41 connected to the controller connector 181 is transferred to a RAM 51 within an extension device 50 connected to a joy port connector 46 of a controller (controller B) having a connection jack 41 connected to the controller connector 182.

First, if the operator operates the controller 40 to determine commencement of backup or if start of copying is determined by the program, the data transfer control circuit 171 transmits a command "2" to the controller A at a step S191. The controller A performs a predetermined operation in accordance with the command "2" to transfer the data stored in the RAM 51 to the data transfer control circuit 171. At a step S193 the data transfer control circuit 171 stores the data received from the controller A to the RAM 174. At a step S194 the data transfer control circuit 171 transfers the data stored in the RAM 174 to the W-RAM 14. When the data format is different between the RAM 51 connected to the controller A and the RAM 51 connected to the controller B, the data stored in the W-RAM 14 is altered by the CPU 11. At a step S195 the data transfer control circuit 171 transfers the data stored in the W-RAM 14 to the RAM 174. At a step S197 the data transfer control circuit 171 transmits a command "3" to the controller B. At a step S196 the data transfer control circuit 171 transmits the data stored in the RAM 174 to the controller B. At a step S198 it is determined whether or not the data to be transferred from the controller A to the controller B have all been transferred. If the transfer is completed, the backup operation is ended. Where the transfer is not completed, the step S191 through the step S198 are executed again.

By executing the step S191 through the step S198 in this manner, it is possible to store the data stored in the RAM 51 of the extension device 50 connected to the controller A to the RAM 51 of the extension device 50 connected to the controller B.

By doing so, it is possible to analyze a competition record of a competitor for future battle references. Even when a racing game or a baseball game is played alone, it is possible to compete with a competitor's machine or baseball team by using machine tuning data or baseball team data of a competitor.

An detailed operation for resetting the joystick 45 will be described.

In order to reset of the joystick 45 to determine an origin point thereof, there are three methods, i.e., a method through an operation of the buttons, a method through turning-on/off the power source, and a method by the image processor 10.

(1) A reset operation by operating the buttons

With referring to a flowchart shown in Figure 27, a reset operation of the counter 444 which stores data indicative of an inclined state of the joystick 45. First, in a step S432, the switch signal detection circuit 443 detects whether or not the buttons 406Lb 406R and 405 are simultaneously depressed. Then, if the three buttons are not depressed, the detection of the switch signals is performed continuously. Furthermore, if the three buttons are simultaneously depressed, the reset signal is outputted.

In response to the reset signal, in a step S434, the count values of the X counter 444X and the Y counter 444Y are reset. Therefore, the origin point of the joystick is determined at every timing that the buttons 406L, 406R and 405 are simultaneously depressed.

In this embodiment, at a time that the buttons 406L, 406R and 405 are simultaneously depressed by the operator, the reset signal is generated by the switch signal detection circuit 443; however, the number of the buttons is not limited to three (3), and may be two (2) or four (4). Furthermore, buttons simultaneously depressed are not limited to the above described buttons, and may be arbitrary buttons.

(2) A reset operation by turning-on/off the power source.

With referring to a flowchart shown in Figure 28, another reset operation of the counter 444 will be described. A reset signal is outputted from a power-on reset circuit 447 in response to a fact that a power source switch (not shown) of the image processor 10 is turned-on by the operator when the controller 40 is connected to the image processor 10, or in response to a fact that the power source is supplied to the controller 40 by inserting the connection jack of the controller 40 into one of the controller connectors 181 - 184 of the image processor 10 when no controller 40 is connected to the image processor 10. In response to such a reset signal, in a step S442, the count values of the X counter 444X and the Y counter 444Y are reset. Therefore, the origin point of the joystick is determined at every timing that the power source is supplied to the controller 40.

(3) A reset operation by the image processor 10

The counter 444 is also reset by executing the steps S60 and S61 shown in the above described Figure 20. Through such a reset operation, it is possible to freely determine the origin point of the joystick 45 by the program in accordance with a processing status of the image processor 10.

According to the above described methods, it is possible to reset the X counter 444X and the Y counter 444Y. If the reset signal is outputted at a time that the lever 474 is in its neutral position, that is, at a time that the lever 474 is not operated by the operator, it is possible to prevent erroneous count values from being stored in the X counter 444X and the Y counter 444Y, and therefore, it is possible to prevent the erroneous count values from being transmitted to the image processor 10

Next, one example that the monitor screen is changed with using the controller 40 will be described with referring to Figure 29. A left illustration in Figure 29 shows the physically inclined amount of the lever 474 with using the coordinates. More specifically, a circle illustrated at a center indicates the lever 474, and in this illustration, a

state where the operator does not operate the lever 474, that is, a state where the lever 474 stands upright with respect to the housing. If the lever 474 is inclined toward a front side, the circle is moved in a +(positive) direction in the Y axis, and if the lever 474 is inclined toward a rear side, the circle is moved in a -(negative) direction of the Y axis. Furthermore, if the lever 474 is inclined toward a right direction, the circle is moved in a +(positive) direction of the X axis, and if the lever 474 is inclined toward a left side, the circle is moved in a -(negative) direction of the X axis.

A right illustration in Figure 29 shows a display screen of a game that an enemy 34 is aimed by inclining the lever 474 toward front, , rear, left and right so as to move an aiming device 35 toward upper, lower, left and right. Clouds 31, mountains 32 and buildings 33 constitute a background image which can be changed by scrolling and etc., the enemy 34 is an object which can freely move within the screen. For example, when the enemy 34 is displayed in a right upper portion of the screen, if the operator inclines the lever 474 toward right and then front, the X counter 444X and the Y counter 444Y are both incremented, and thus, the count values thereof become larger. The count values are transmitted to the image processor 10 which changes a display position of the aiming device 35 with utilizing the data of the count values. Therefore, the aiming device 35 becomes to be super-positioned on the enemy 34. Then, at a timing the aiming device 35 is just super-positioned on the enemy 34, if the button such as the button 404A is depressed, the switch data of the button is also transmitted to the image processor 10 as similar to the counter data. Accordingly, the image processor 10 generates the image signal so as to display a missile (not shown) or the like which can attack the enemy 34 on the screen.

Next, one example of a case where the analog joystick is reset in a state where the lever 474 is deviated from the center, that is, the lever 474 is inclined will be described

with referring to Figure 30.

When the X counter 444X and the Y counter 444Y are reset at the coordinate position indicated by a solid circular line in a left illustration in Figure 30, if the operator releases his or her hand from the lever 474, the lever 474 returns to the center of the coordinate, i.e., a position indicated by a dotted circular line. A change of the image will be described with utilizing a right illustration in Figure 30. First, when the X counter 444X and the Y counter 444Y are reset, as similar to the right illustration in Figure 29, the aiming device 35 is displayed at the solid circular line because the count values of the X counter 444X and the Y counter 444Y are both "O" equal to the initial values. Next, if the operator releases his or her hand from the lever 474, the lever 474 returns to the center position of the coordinate, and the X counter 444X within the controller 40 is incremented and the Y counter 444Y is decremented, and therefore, the count values of the counters 444X and 444Y become larger and smaller, respectively. The count values are transmitted to the image processor 10 which changes the display position of the aiming device 35 with utilizing the data of the count values to the position of an aiming device 35 indicated by a dotted line.

A description will be made on that such a reset operation is performed at what timing. For example, if the operator presumes the position that the enemy 34 appears is the position of the aiming device 35 shown by the dotted line in the right illustration in Figure 30, the operator wishes to super-positions the aiming device 35 at the position of the dotted line aiming device 35 at an instance that the enemy 34 appears. However, if the aiming device 35 is continuously kept on the dotted line aiming device 35, the operator who is a game player is bored, and there is a further possibility that if the enemy 34 appears at a place not presumed, the operator cannot attack the enemy, and therefore, in order to super-position the aiming device 35 on the position of the dotted line aiming

device 35 at an instance that the enemy 34 appears, and to freely move the aiming device 35 to other places, the above described reset function is used. In describing an action of the operator more specifically, the operator first inclines the lever 474 such that the aiming device 35 is displayed at a position symmetrically corresponding to the position presumed that the enemy 34 will appear (the position of the dotted line aiming device 35) with reference to the solid line aiming device 35. At that time, the physical coordinate position of the lever 474 becomes the solid circular line in the left illustration in Figure 29. Then, the operator simultaneously depresses the three buttons of the buttons 406L, 406R and 405. In response to the depression, the X counter 444X and the Y counter 444Y are both reset, and the aiming device 35 is displayed at the position of the solid line aiming device 35. Then, the operator freely moves the aiming device 35, and waits for an appearance of the enemy 34. In the enemy 34 appears at the position of the dotted line aiming device 35, the operator releases the hand from the lever 474. Therefore, the lever 474 returns to the physical coordinate position shown by the dotted circular line in the left illustration in Figure 29. Resultingly, the aiming device 35 becomes to be displayed at the dotted line aiming device 35. When the operator surely super-positions the aiming device 35 on the enemy 34, and depresses the switch such as the button 404A, a missile (not shown) or the like which attacks the enemy 34 is displayed on the screen.

Furthermore, if the reset operation is performed in the above described manner, it is possible to largely move the lever 474 toward a right lower direction, and therefore, the above described reset operation is also effective at a time that the operator wishes to largely move the lever 474 toward a right lower direction.

Although the present invention has been described and illustrated in detail, it is clearly understood that the same is by way of illustration and example only and is not to be taken by way of limitation, the spirit and scope of the present invention being limited

only by the terms of the appended claims.

Throughout this specification and the claims which follow, unless the context requires otherwise, the word "comprise", and variations such as "comprises" and "comprising", will be understood to imply the inclusion of a stated integer or step or group of integers or steps but not the exclusion of any other integer or step or group of integers or steps.

The reference to any prior art in this specification is not, and should not be taken as, an acknowledgment or any form of suggestion that that prior art forms part of the common general knowledge in Australia.

AUSTRALIAN PATENT OFFICE

THE CLAIMS DEFINING THE INVENTION ARE AS FOLLOWS:

1. A player controller for use in a video game system, said video game system having a main console including a video game processing system for executing a video game program to generate a video game display on a display, said player controller comprising:

a moving object position control mechanism for generating data indicative of the display position of a displayed object and which, in use, is tilted by an operator within a desired range to control movement of a displayed object along any one of a substantially continuous range of angular directions;

detecting circuitry for generating data indicative of the direction and the rate of movement which a displayed object is to be moved;

interface circuitry for sending data indicative of the direction and the rate of movement which a displayed object is to be moved to said video game console and for receiving data and commands from said console;

a plurality of control keys; and

processing circuitry coupled to said interface circuitry for receiving at least one command from said video game processing system and for transferring operation member position data and information relating to the state of at least one of said plurality of control keys to said video processing system in response to said at least one command, wherein said moving object position control mechanism is supported such that it stops at a desired position when not being manipulated by the operator to thereby define a point of origin, said control mechanism being capable of generating operation member position data for controlling movement of a displayed object with respect to a coordinate reference frame defined by said point of origin.

2. A player controller according to claim 1, further including transmitting circuitry for transmitting data to said video game console using duty cycle modulation.

3. A player controller according to claim 1, further including receiving circuitry for demodulating information received from said main console.

AUSTRALIAN PATENT OFFICE 30

4. A player controller according to claim 1, further including a removable memory which is accessible by said video game processing system via said interface circuitry for storing video game related data.

5. A player controller in accordance with claim 1, wherein said moving object position control mechanism is supported such that it stops at a desired position when not being manipulated by the operator to thereby define a point of origin, said control mechanism being capable of generating operation member position data for controlling movement of a displayed object with respect to a coordinate reference frame defined by said point of origin.

6. A player controller in accordance with claim 1, further including reset signal generation circuitry for resetting said point of origin.

7. A player controller in accordance with claim 1, further including a directional switch for controlling the direction of movement of a displayed object.

8. A player controller for use in a video game system having a main console including a video game processing system for executing a video game program to generate a video game display on a display, said player controller comprising:

a moving object position control mechanism for generating data indicative of the display position of a displayed object and which, in use, is tilted by an operator within a desired range to control movement of a displayed object along any one of a substantially continuous range of angular directions;

detecting circuitry for generating data indicative of the direction and the rate of movement which a displayed object is to be moved;

interface circuitry for sending data indicative of the direction and the rate of movement which a displayed object is to be moved to said video game console and for receiving data and commands from said console;

AUSTRALIAN PATENT OFFICE

a plurality of control keys; and

processing circuitry coupled to said interface circuitry for receiving at least one command from said video game processing system and for transferring operation member position data and information relating to the state of at least one of said plurality of control keys to said video processing system in response to said at least one command, said player controller further including a removable memory which is accessible by said video game system via said interface circuitry for storing video game data, an expansion port located within a cavity in said player controller and electrically coupled to said interface circuitry, and wherein said memory includes a RAM memory sized to fit into said cavity associated with said expansion port embodied and accessible by the video processing system via the expansion port.

9. A player controller for use in a video game system having a main console including a video game processing system for executing a video game program to generate a video game display on a display, said player controller comprising:

a moving object position control mechanism for generating data indicative of the display position of a displayed object and which, in use, is tilted by an operator within a desired range to control movement of a displayed object along any one of a substantially continuous range of angular directions;

detecting circuitry for generating data indicative of the direction and the rate of movement which a displayed object is to be moved;

interface circuitry for sending data indicative of the direction and the rate of movement which a displayed object is to be moved to said video game console and for receiving data and commands from said console;

a plurality of control keys; and

processing circuitry coupled to said interface circuitry for receiving at least one command from said video game processing system and for transferring operation member position data and information relating to the state of at least one of said plurality of control keys to said video processing system in response to said at least one command; and

AUSTRALIAN PATENT OFFICE

a liquid crystal display for displaying video game related data in accordance with a video game program.

10. A player controller in accordance with claim 9, further including a liquid crystal display controller for receiving data and control signals from said interface circuitry to control the display of video game related data.

11. A player controller for use in a video game system having a main console including a video game processing system for executing a video game program to generate a video game display on a display, said player controller comprising:

a moving object position control mechanism for generating data indicative of the display position with respect to a coordinate reference frame of a displayed object and which, in use, is tilted by an operator within a desired range to control movement of a displayed object along any one of a substantially continuous range of angular directions;

a plurality of control keys for generating control signals for initiating a control function controlled by said video game processing system;

interface circuitry for exchanging information between said player controller and said console;

a data processor, coupled to said interface circuitry, for controlling the transmission of said data indicative of the display position of a displayed object and said control signals for initiating a control function; and

an expansion device coupled to said data processor, wherein said video game processing system is operable to transfer data to said expansion device, wherein said expansion device includes a removable memory which is accessible by said video game processing system.

12. A player controller according to claim 11, further including transmitting circuitry coupled to said data processor for transmitting said data indicative of the display position of a displayed object and said control signals for initiating a control function to said video game console using duty cycle modulation.

AUSTRALIAN PATENT OFFICE

13. A player controller according to claim 11, further including receiving circuitry coupled to said data processor for demodulating information received from said main console.

14. A player controller according to claim 11, wherein said expansion device includes a removable memory which is accessible by said video game processing system.

15. A player controller for use in a video game system having a main console including a video game processing system for executing a video game program to generate a video game display on a display, said player controller comprising:

a moving object position control mechanism for generating data indicative of the display position with respect to a coordinate reference frame of a displayed object and which, in use, is tilted by an operator within a desired range to control movement of a displayed object along any one of a substantially continuous range of angular directions;

a plurality of control keys for generating control signals for initiating a control function controlled by said video game processing system;

interface circuitry for exchanging information between said player controller and said console;

a data processor, coupled to said interface circuitry, for controlling the transmission of said data indicative of the display position of a displayed object and said control signals for initiating a control function; and

an expansion device coupled to said data processor, wherein said video game processing system is operable to transfer data to said expansion device, wherein said moving object position control mechanism is supported such that it stops at a desired position when not being manipulated by the operator to thereby define a point of origin, said control mechanism being capable of generating operation member position data for controlling movement of a displayed object with respect to a coordinate reference frame defined by said point of origin.

AUSTRALIAN PATENT OFFICE

16. A player controller in accordance with claim 15, further including reset signal generation circuitry responsive to the actuation of at least one of said plurality of said of control keys for resetting said point of origin.

17. A player controller in accordance with claim 11, further including a directional switch for controlling the direction of movement of a displayed object.

18. A player controller for use in a video game system having a main console including a video game processing system for executing a video game program to generate a video game display on a display, said player controller comprising:

a moving object position control mechanism for generating data indicative of the display position with respect to a coordinate reference frame of a displayed object and which, in use, is tilted by an operator within a desired range to control movement of a displayed object along any one of a substantially continuous range of angular directions;

a plurality of control keys for generating control signals for initiating a control function controlled by said video game processing system;

interface circuitry for exchanging information between said player controller and said console;

a data processor, coupled to said interface circuitry, for controlling the transmission of said data indicative of the display position of a displayed object and said control signals for initiating a control function;

an expansion device coupled to said data processor, wherein said video game processing system is operable to transfer data to said expansion device; and

an expansion port located within a cavity in said player controller and electrically coupled to said interface circuitry, and wherein said memory includes a RAM memory sized to fit into said cavity associated with said expansion port embodied and accessible by the video processing system via the expansion port.

AUSTRALIAN PATENT OFFICE

19. A player controller in accordance with claim 11, wherein said expansion device includes a liquid crystal display for displaying video game related data in accordance with a video game program.

20. A player controller in accordance with claim 19, further including a liquid crystal display controller for receiving data and control signals from said interface circuitry to control the display of video game related data.

21. An external memory system for controlling the operation of a video game system console, said video game system console having a game program executing processing system for executing said video game program to create a display, and at least one player controller having a joystick control member and an insertion port for receiving an expansion module, said video game executing processing system responding to data generated by said player controller to modify said display, said external memory system comprising:

a memory media for storing program instructions;

a connector for coupling said program instructions from said memory media to said video game system console;

said program instructions including at least one instruction for causing said game program executing processing system to cause the player controller to transmit to said game program executing processing system an identification of the type of expansion module connected to said player controller, and at least one instruction for causing said game program executing processing system to transfer data to said expansion module coupled to said player controller insertion port.

22. An external memory system according to claim 21, wherein at least one instruction in said memory media controls said game program executing processing system to output a command to the controller requesting operating state data.

AUSTRALIAN PATENT OFFICE

23. An external memory system according to claim 21, wherein said expansion module includes an external, removable read/write memory and wherein at least one instruction in said memory media controls said game program executing processing system to output a command to the controller to write data to said read/write memory module at a specified address.

24. An external memory system according to claim 21, wherein said expansion module includes an external, removable read/write memory and wherein at least one instruction in said memory media controls said game program executing processing system to output a command to the controller to read data from said read/write memory module at a specified address.

25. An external memory system according to claim 21, wherein said expansion module includes an external, removable read/write memory and wherein at least one instruction in said memory media controls said game program executing processing system to output a command to the controller to write game play related data to said read/write memory.

26. An external memory system according to claim 25, wherein said game play related data is data which is indicative of the game play related state of a video game.

27. An external memory system according to claim 21, wherein said expansion module includes a battery and an external, removable read/write memory coupled to said battery, and wherein at least one instruction in said memory media controls said game program executing processing system to output a command to the controller to access said read/write memory module.

28. An external memory system according to claim 21, wherein said expansion module includes a liquid crystal display for displaying video game related data in accordance with a video game program.

AUSTRALIAN PATENT OFFICE

29. An external memory system according to claim 21, wherein said video game system includes a first player controller having a first expansion module and a second player controller having a second expansion module, and wherein said program instructions include at least one instruction for causing said game program executing processing system to transfer data to said first expansion module and at least one instruction for causing said game program executing processing system to transfer data to said second expansion module.

30. A method for operating a video game system having a program executing processing system and at least one player controller having a joystick control member and an insertion port for receiving an expansion module, and an external memory device for storing a program for controlling the operation of said video game system, said method comprising the steps of:

executing at least one instruction stored in said external memory for causing said program executing processing system to determine the type of expansion module coupled to said player controller;

executing at least one instruction stored in said external memory for causing said program executing processing system to initiate the transfer of data the expansion module of said player controller;

transferring data under the control of said program executing processing system to said player controller;

receiving said data by said player controller under the control of controller processing circuitry; and

coupling said data to said player controller expansion module.

31. A method according to claim 30, wherein said expansion module includes an external, removable read/write memory and wherein said step of executing at least one instruction to initiate the transfer of data includes the step of executing a command to cause the controller to write data to said read/write memory.

AUSTRALIAN PATENT OFFICE

32. A method according to claim 30, wherein said expansion module includes an external, removable read/write memory and further including the step of executing a command to cause the controller to read data from said read/write memory module.

33. A method according to claim 30, wherein said expansion module includes an external, removable read/write memory and wherein said step of executing at least one instruction to initiate the transfer of data includes the step of executing a command to cause the controller to write game play related data to said read/write memory.

34. A method according to claim 30, further including the step of generating data indicative of the state of a video game, wherein said expansion module includes an external, removable read/write memory and wherein said step of executing at least one instruction to initiate the transfer of data includes the step of executing a command to cause the controller to write said data indicative of the state of a video game to said read/write memory.

35. A method according to claim 30, wherein said expansion module includes an external, removable read/write memory, and further including the steps of obtaining video game related data relating to video game play by a first player and wherein said transferring step includes the step of transferring said video game related data relating to video game play by a first player to the read/write memory associated with the player controller of a second player.

36. A method according to claim 35, wherein said step of obtaining includes the step of accessing the read/write memory associated with said first player's player controller.

37. A method according to claim 30, wherein said expansion module includes a liquid crystal display and wherein said step of executing at least one instruction to initiate the transfer of data includes the step of executing a command to cause the controller to display data on said liquid crystal display.

AUSTRALIAN PATENT OFFICE

38. A player controller for use in a video game system substantially as hereinbefore described with reference to the accompanying drawings.

39. An external memory system for controlling the operation of a video game system substantially as hereinbefore described with reference to the accompanying drawings.

40. A method for operating a video game system substantially as hereinbefore described with reference to the accompanying drawings.

DATED this 31st day of

NINTENDO CO., LTD.
By its Patent Attorneys
DAVIES COLLISON CAVE

AUSTRALIAN PATENT OFFICE

FIG. 1

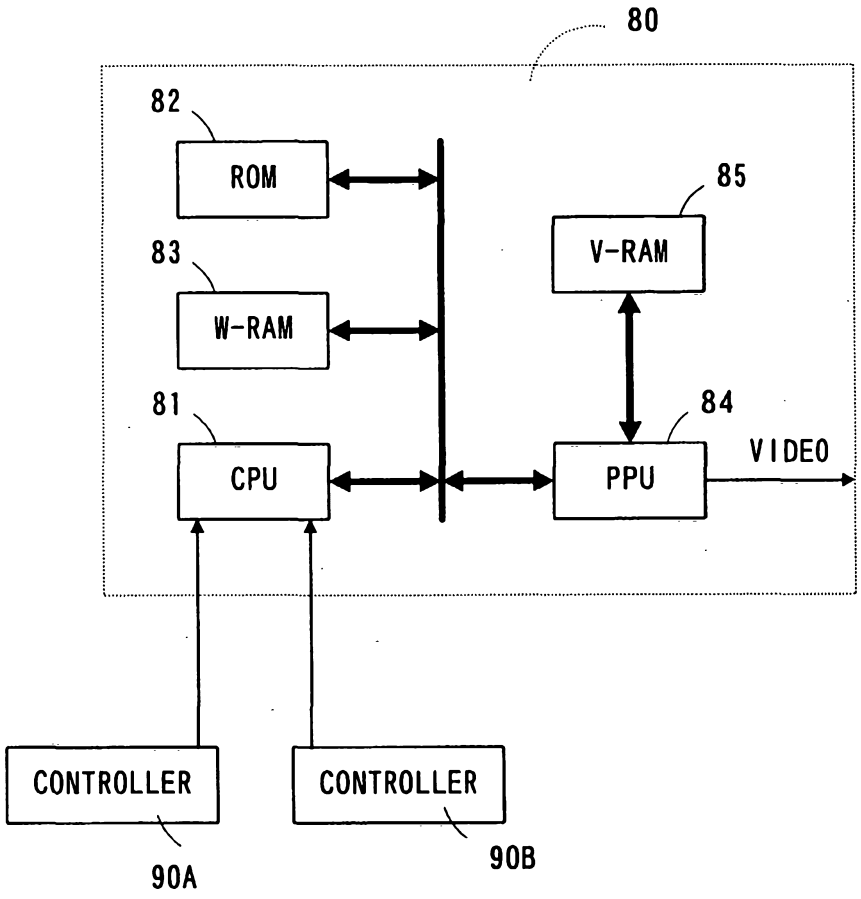
80
82
ROM
83
W-RAM
81
CPU
85
V-RAM
84
PPU
VIDEO
CONTROLLER
90A
CONTROLLER
90B

FIG. 2

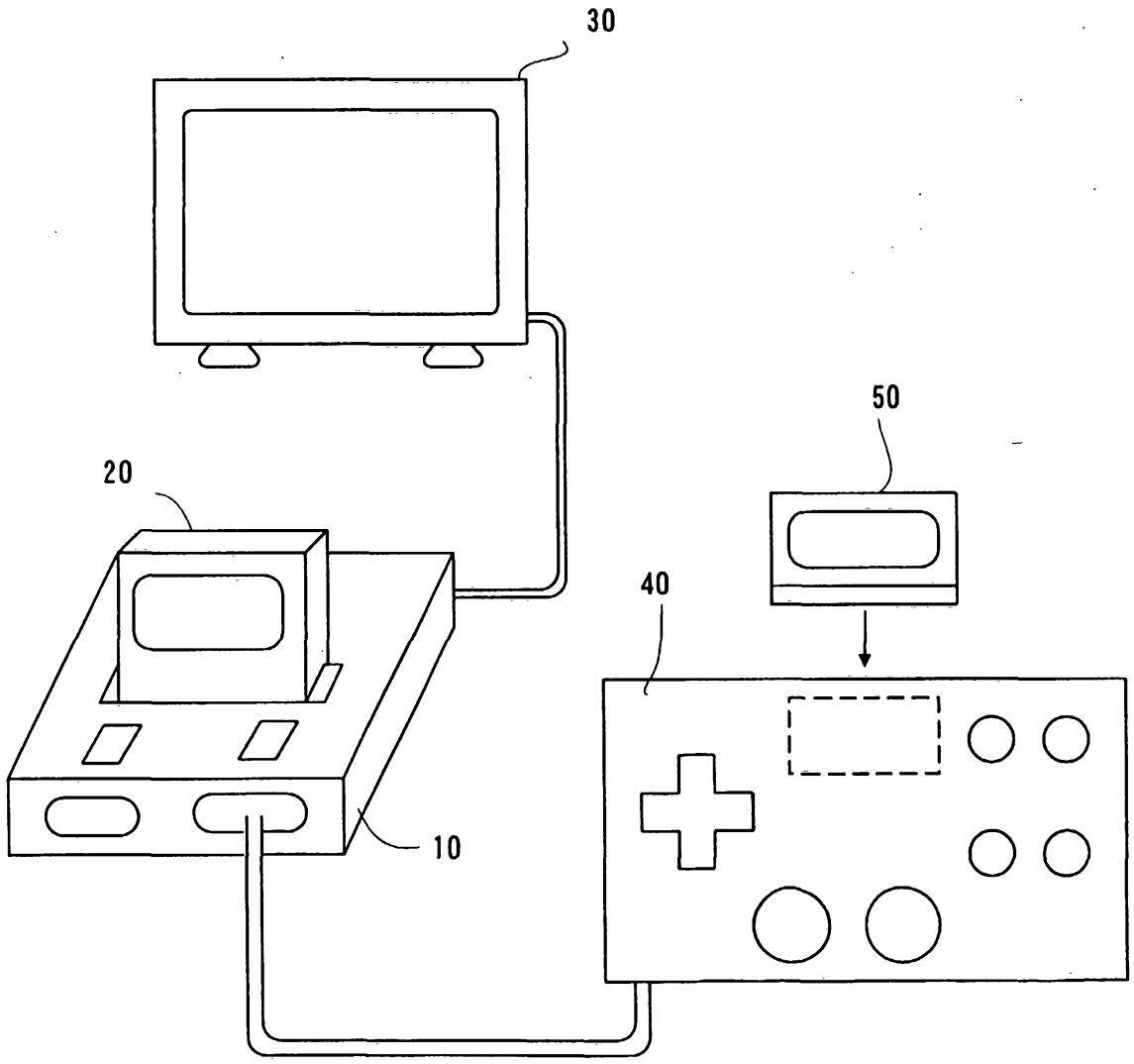

FIG. 3

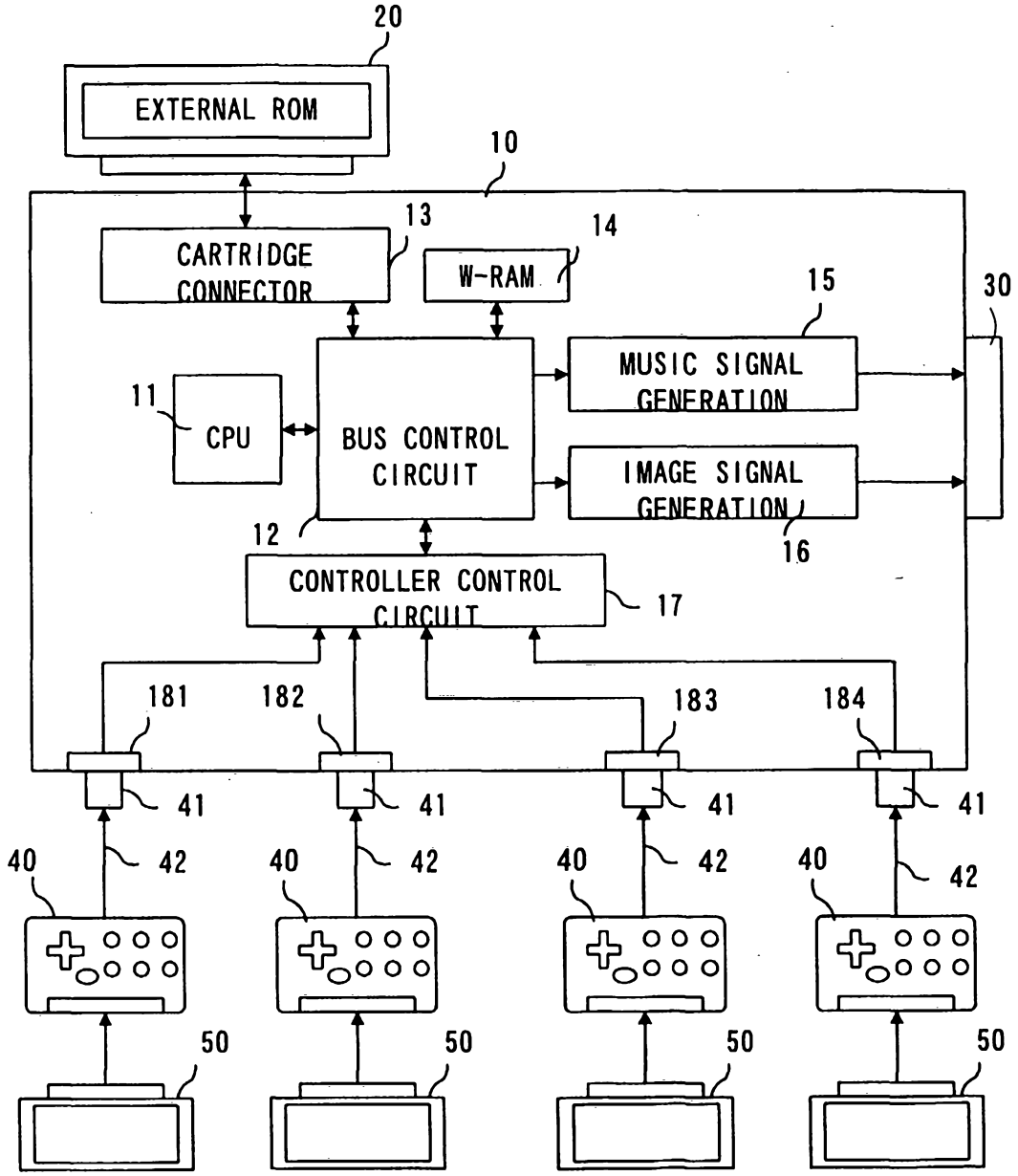
20
EXTERNAL ROM
10
13
CARTRIDGE CONNECTOR
14
W-RAM
15
30
MUSIC SIGNAL GENERATION
11
CPU
BUS CONTROL CIRCUIT
IMAGE SIGNAL GENERATION
16
12
CONTROLLER CONTROL CIRCUIT
17
181
182
183
184
41
40
42
50

FIG. 4

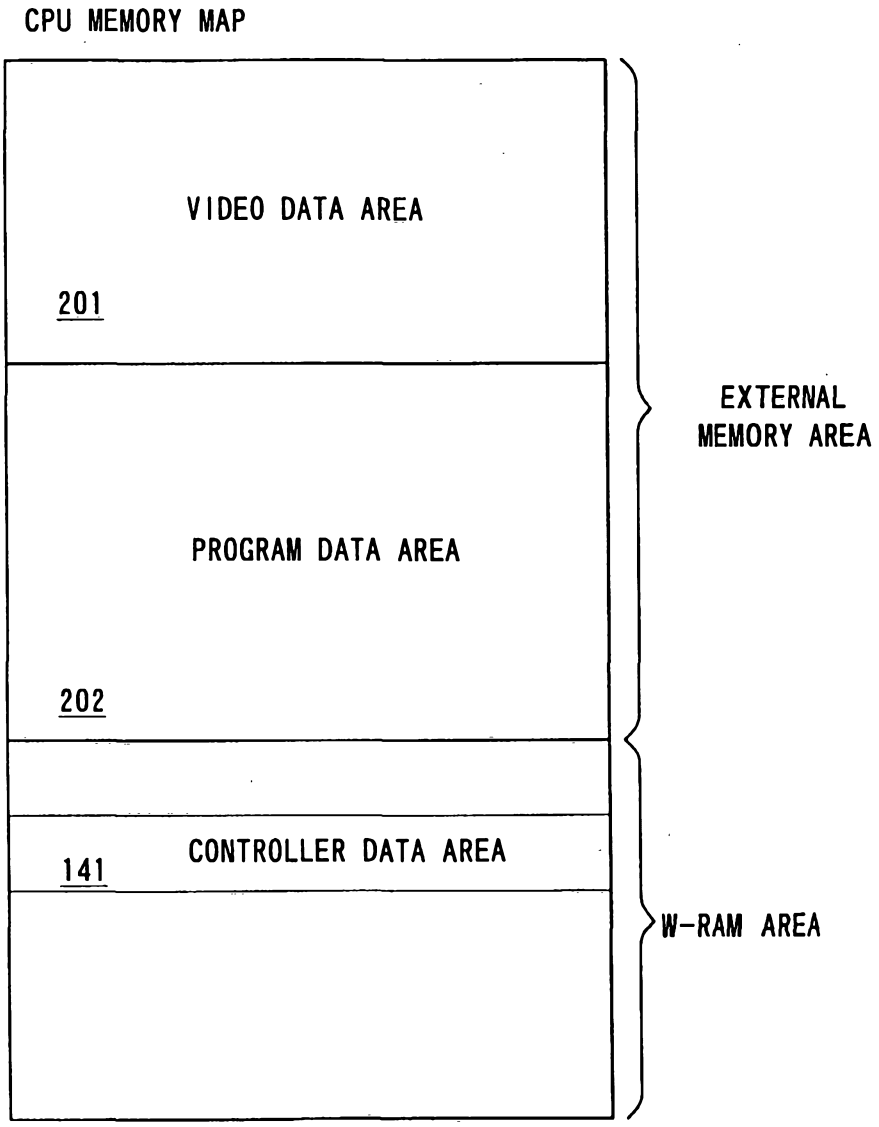
CPU MEMORY MAP
VIDEO DATA AREA
201
PROGRAM DATA AREA
202
CONTROLLER DATA AREA
141
EXTERNAL MEMORY AREA
W-RAM AREA

FIG. 5

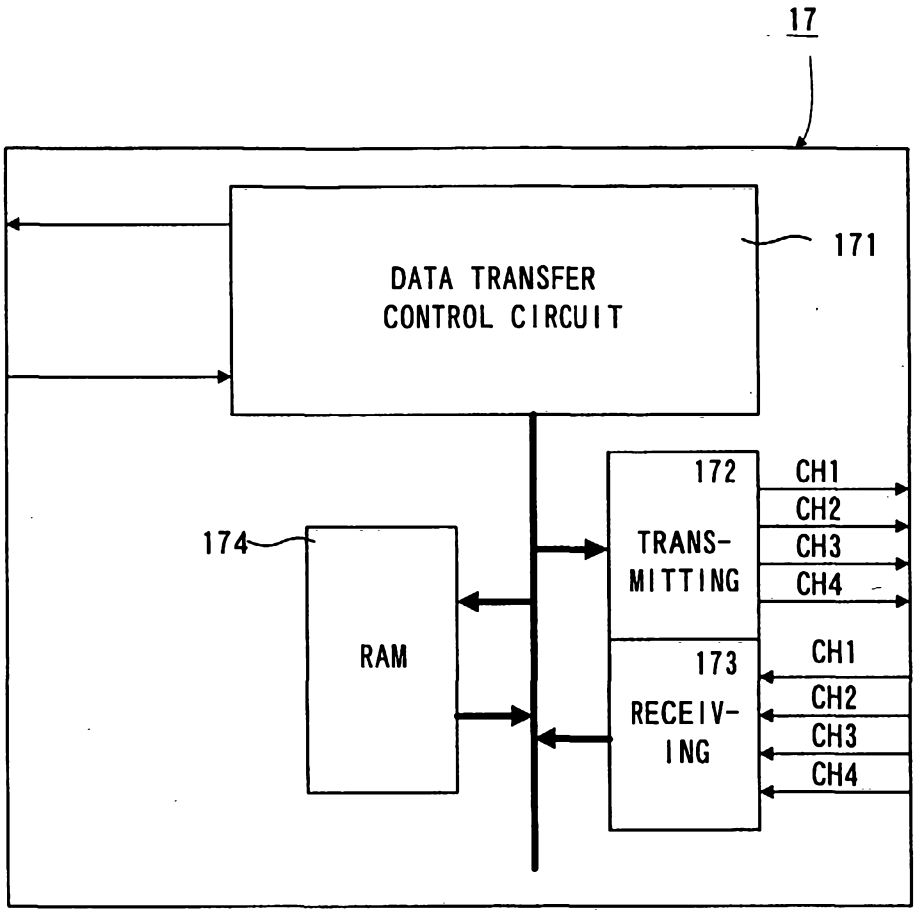
17
DATA TRANSFER
CONTROL CIRCUIT
171
172
TRANS-
MITTING
CH1
CH2
CH3
CH4
174
RAM
173
RECEIV-
ING
CH1
CH2
CH3
CH4

FIG. 6

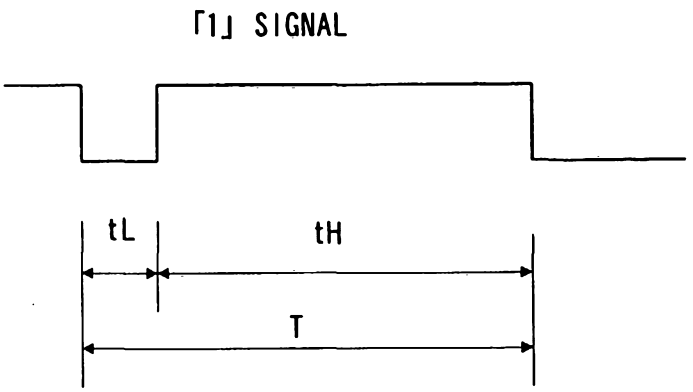

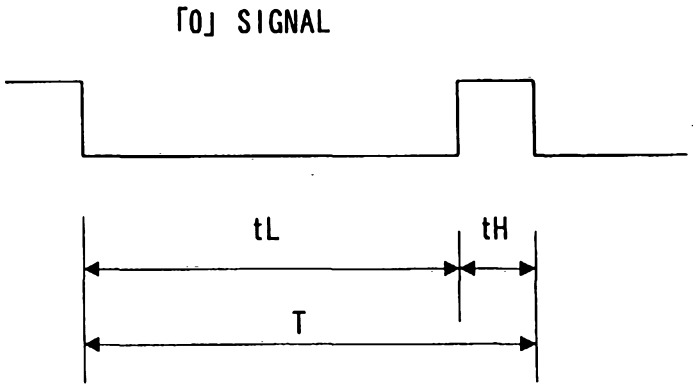

FIG. 7

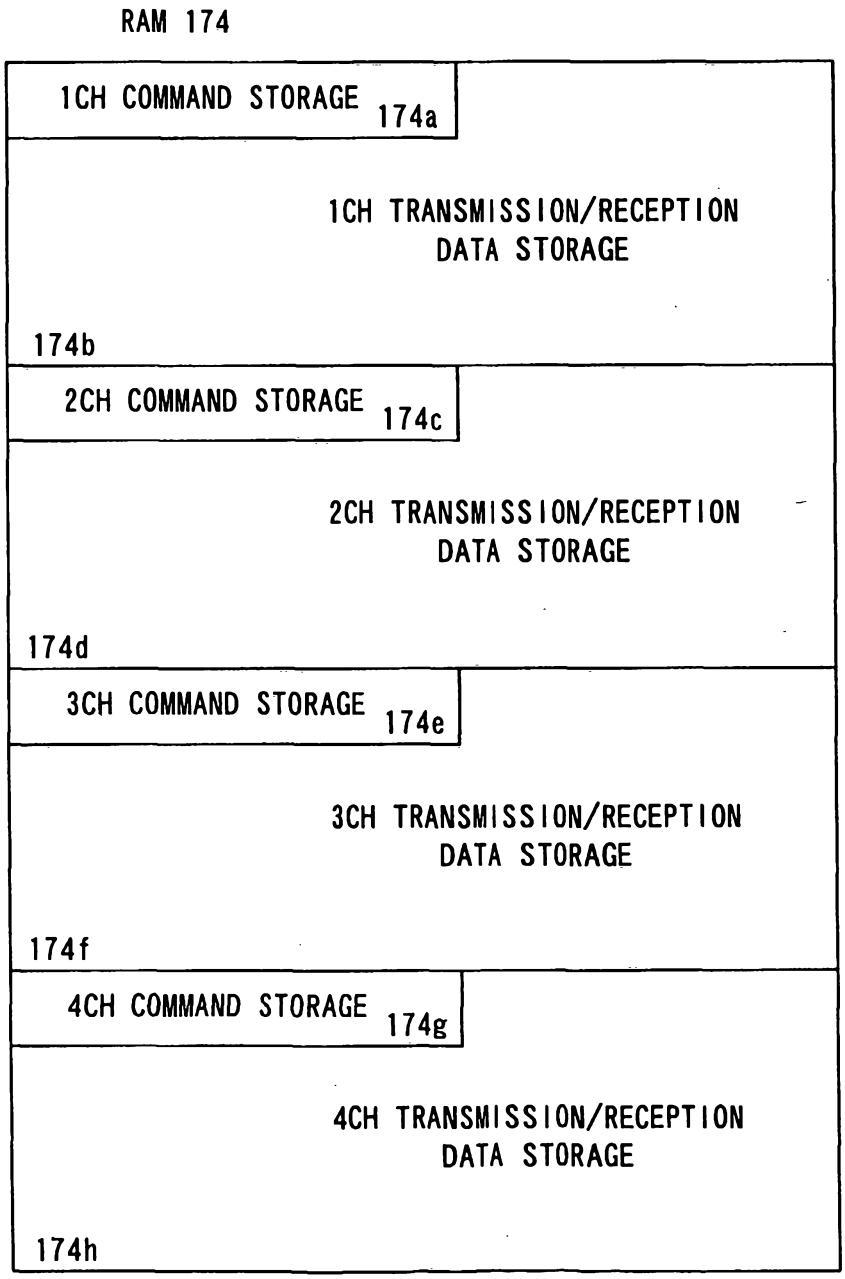
RAM 174
1CH COMMAND STORAGE 174a
1CH TRANSMISSION/RECEPTION DATA STORAGE
174b
2CH COMMAND STORAGE 174c
2CH TRANSMISSION/RECEPTION DATA STORAGE
174d
3CH COMMAND STORAGE 174e
3CH TRANSMISSION/RECEPTION DATA STORAGE
174f
4CH COMMAND STORAGE 174g
4CH TRANSMISSION/RECEPTION DATA STORAGE
174h

FIG. 8

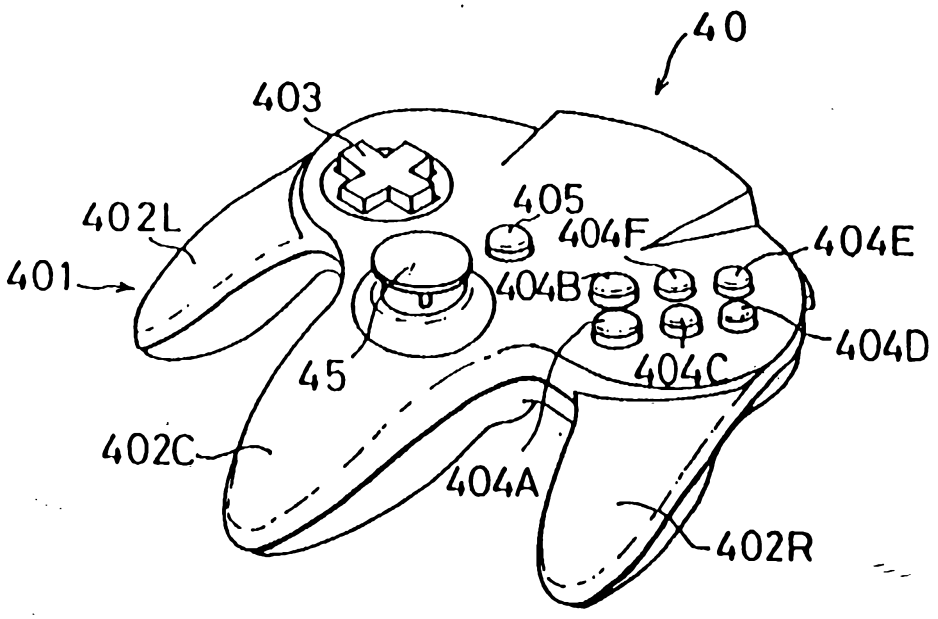
40
403
405
402L
404F
404E
401
404B
404D
45
404C
402C
404A
402R

FIG. 9

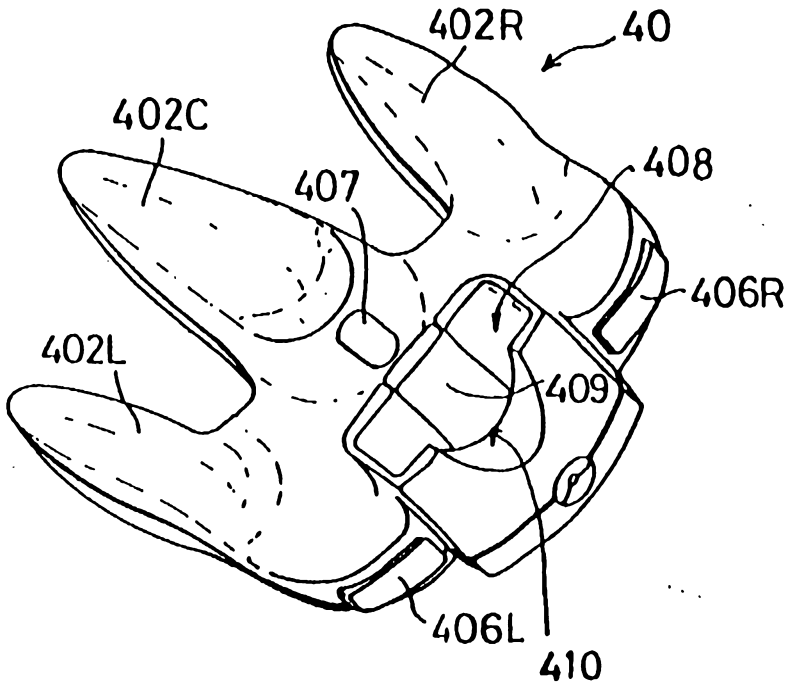
402R
40
402C
408
407
406R
402L
409
406L
410

FIG. 10

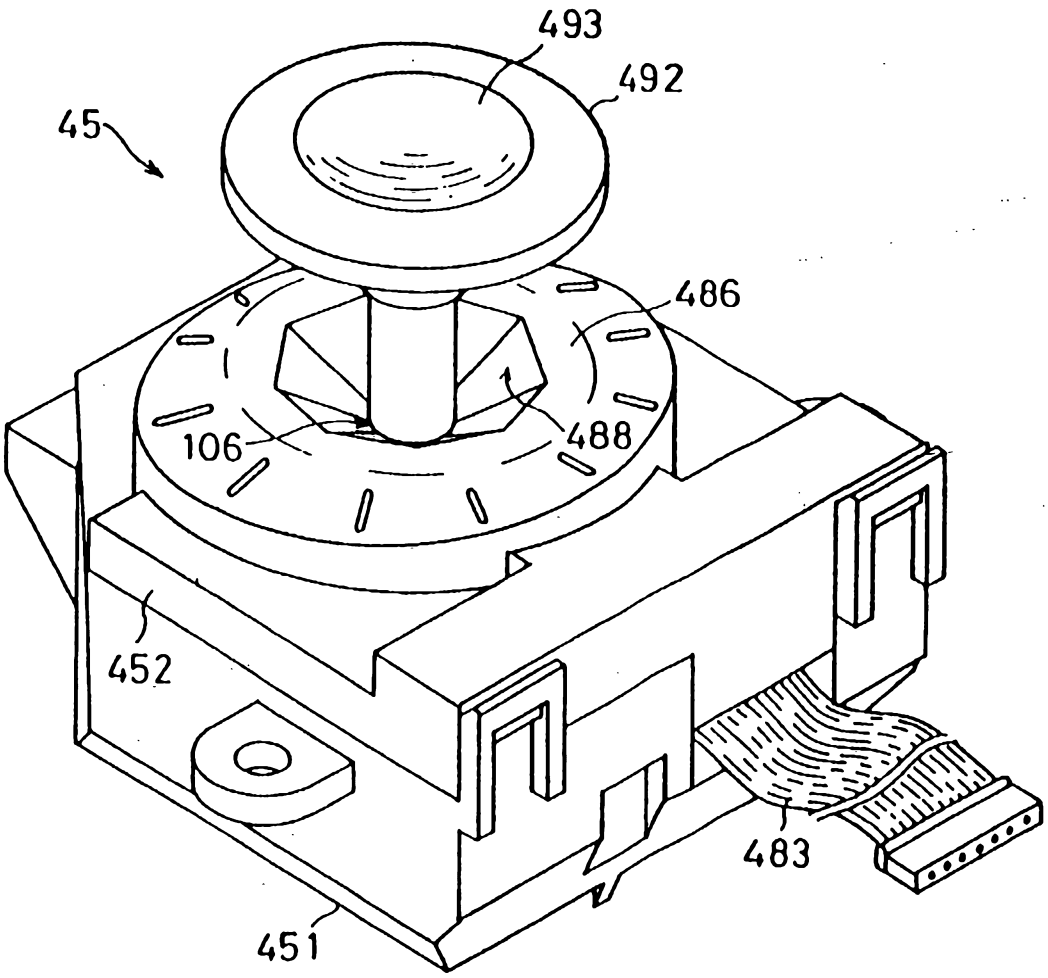

FIG. 11

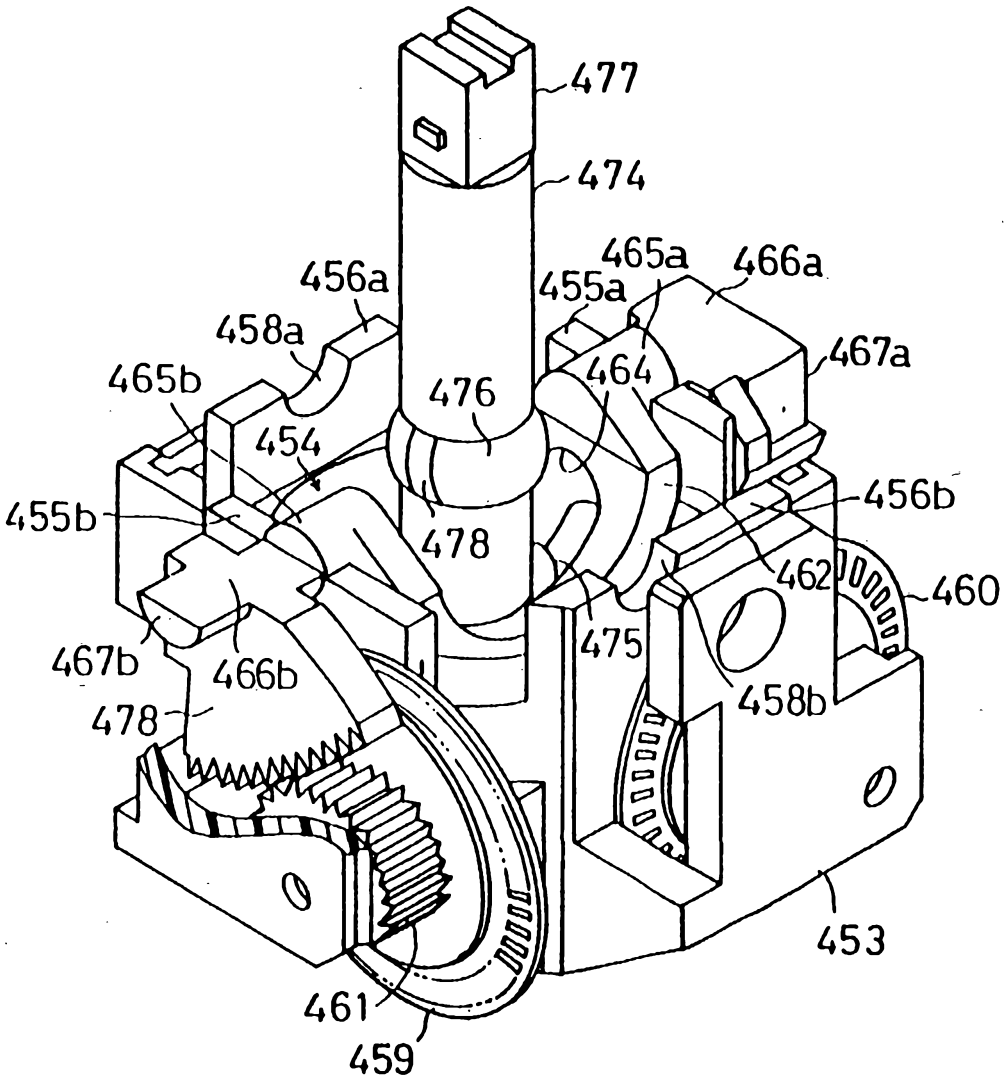
477
474
456a
465a
466a
455a
458a
467a
465b
476
464
454
456b
455b
478
462
460
475
467b
466b
458b
478
453
461
459

FIG. 12

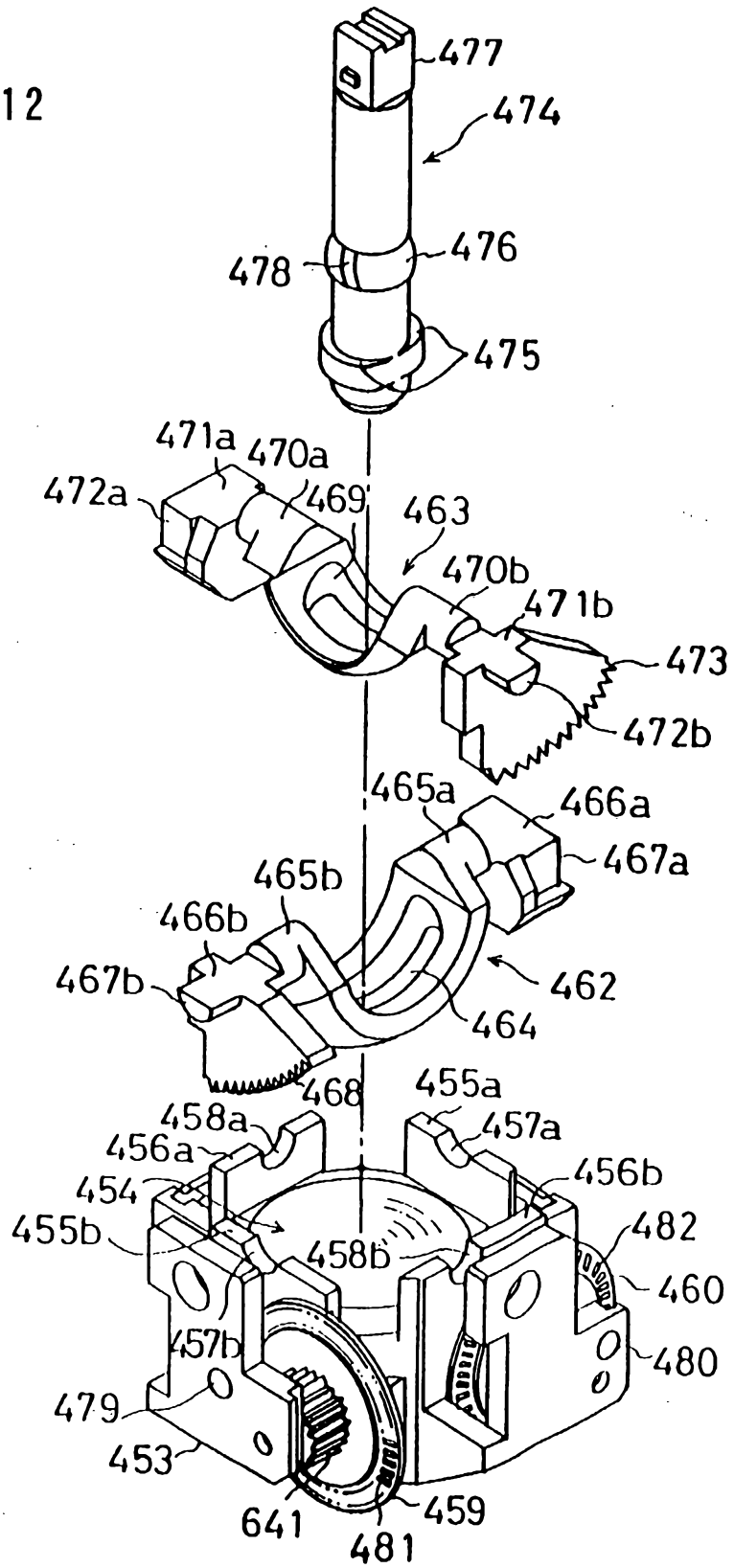
477
474
476
478
475
471a
470a
472a
469
463
470b
471b
473
472b
465a
466a
467a
465b
466b
467b
462
464
468
455a
458a
457a
456a
456b
454
482
455b
458b
460
457b
480
479
453
459
641
481

FIG. 13

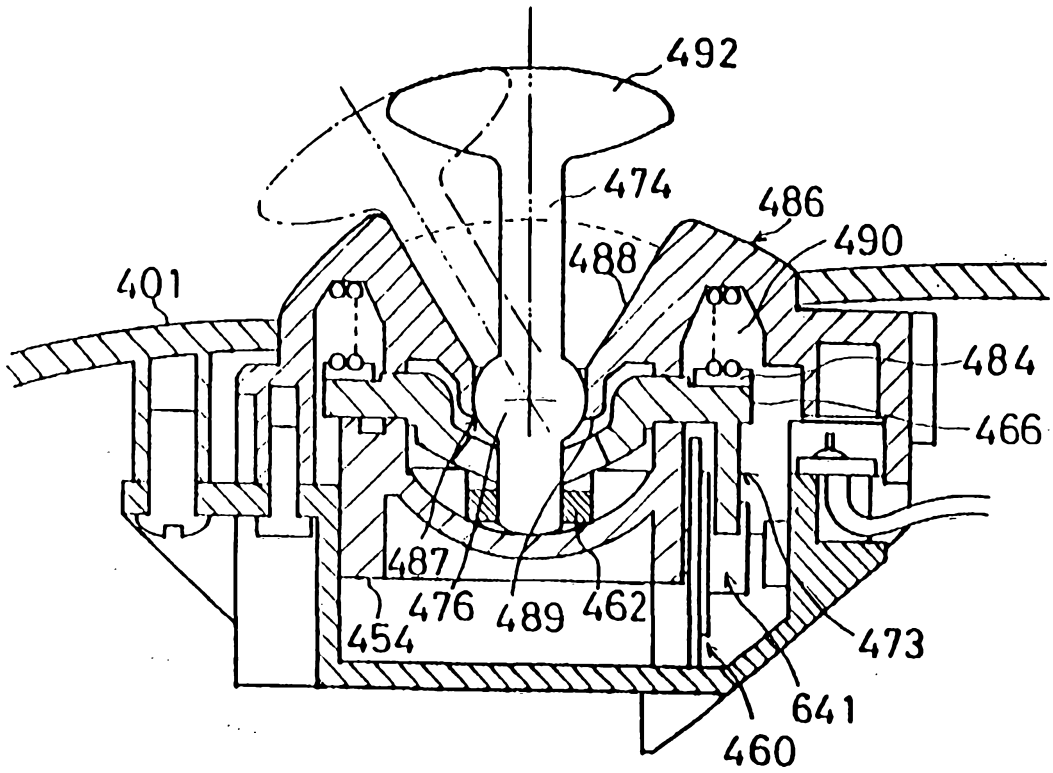

FIG. 14

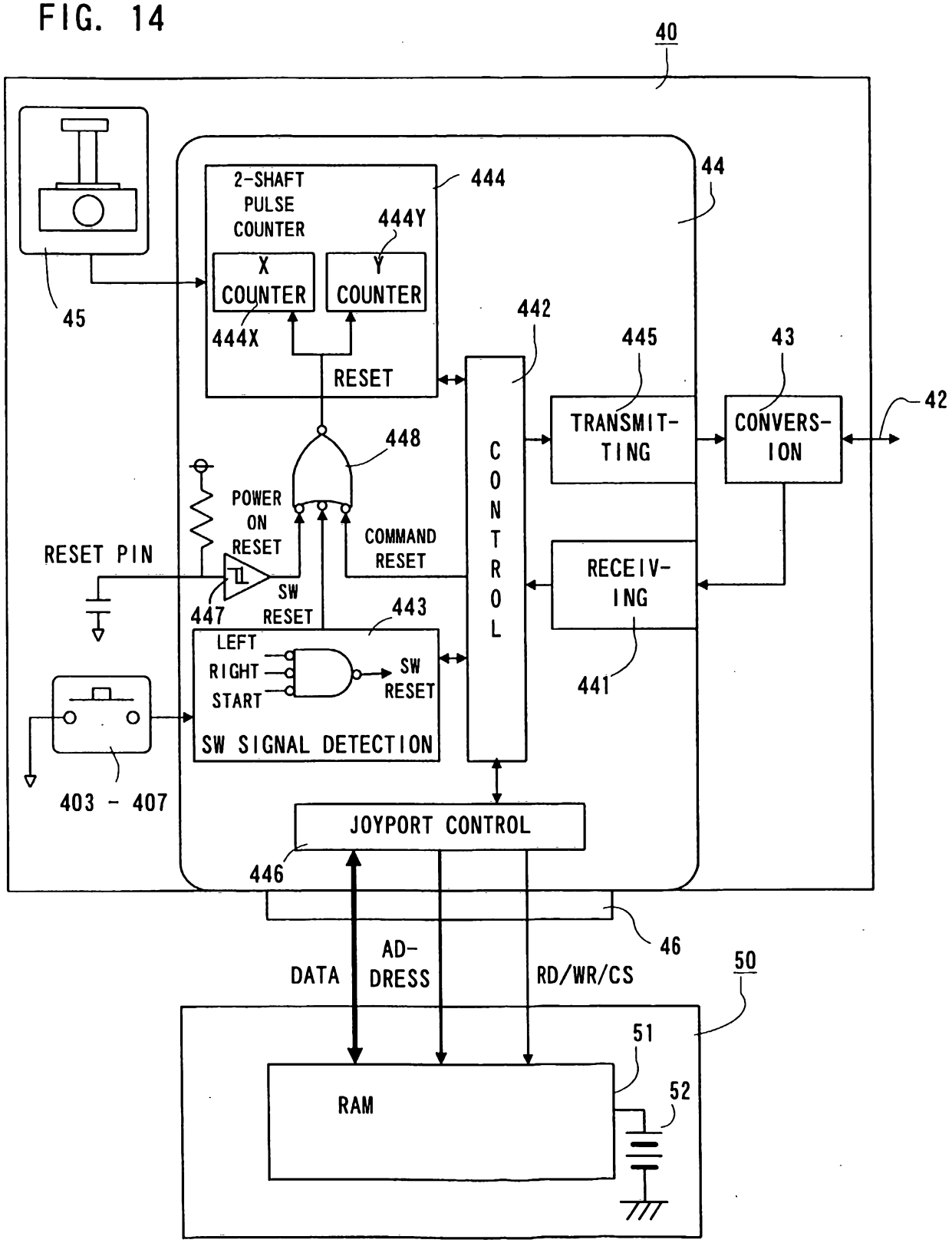
40
44
2-SHAFT PULSE COUNTER
444
444Y
X COUNTER
Y COUNTER
444X
RESET
45
442
445
43
42
TRANSMIT-TING
CONVERS-ION
448
POWER ON RESET
COMMAND RESET
CONTROL
RESET PIN
RECEIV-ING
447
SW RESET
443
LEFT
RIGHT
START
SW RESET
SW SIGNAL DETECTION
441
403 - 407
JOYPORT CONTROL
446
46
DATA
AD-DRESS
RD/WR/CS
50
51
RAM
52

FIG. 15

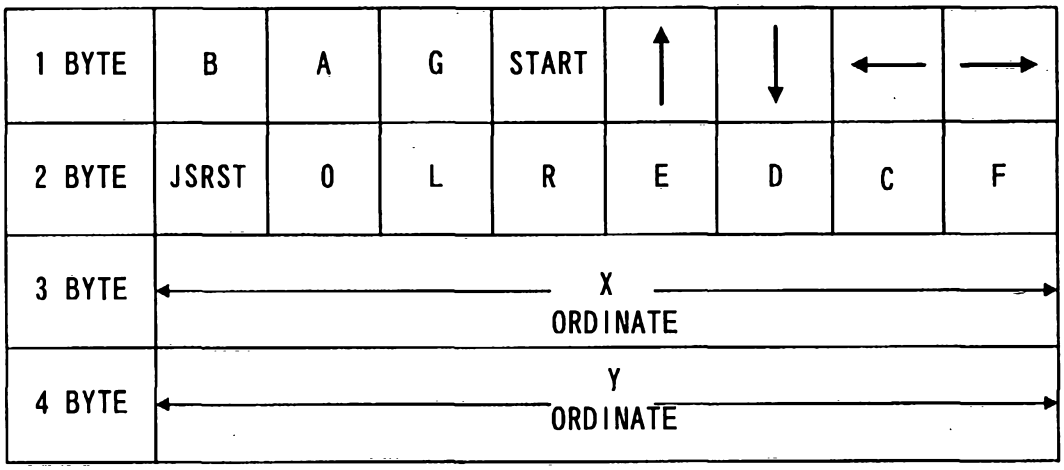
1 BYTE
B
A
G
START
2 BYTE
JSRST
0
L
R
E
D
C
F
3 BYTE
X
ORDINATE
4 BYTE
Y
ORDINATE

FIG. 16

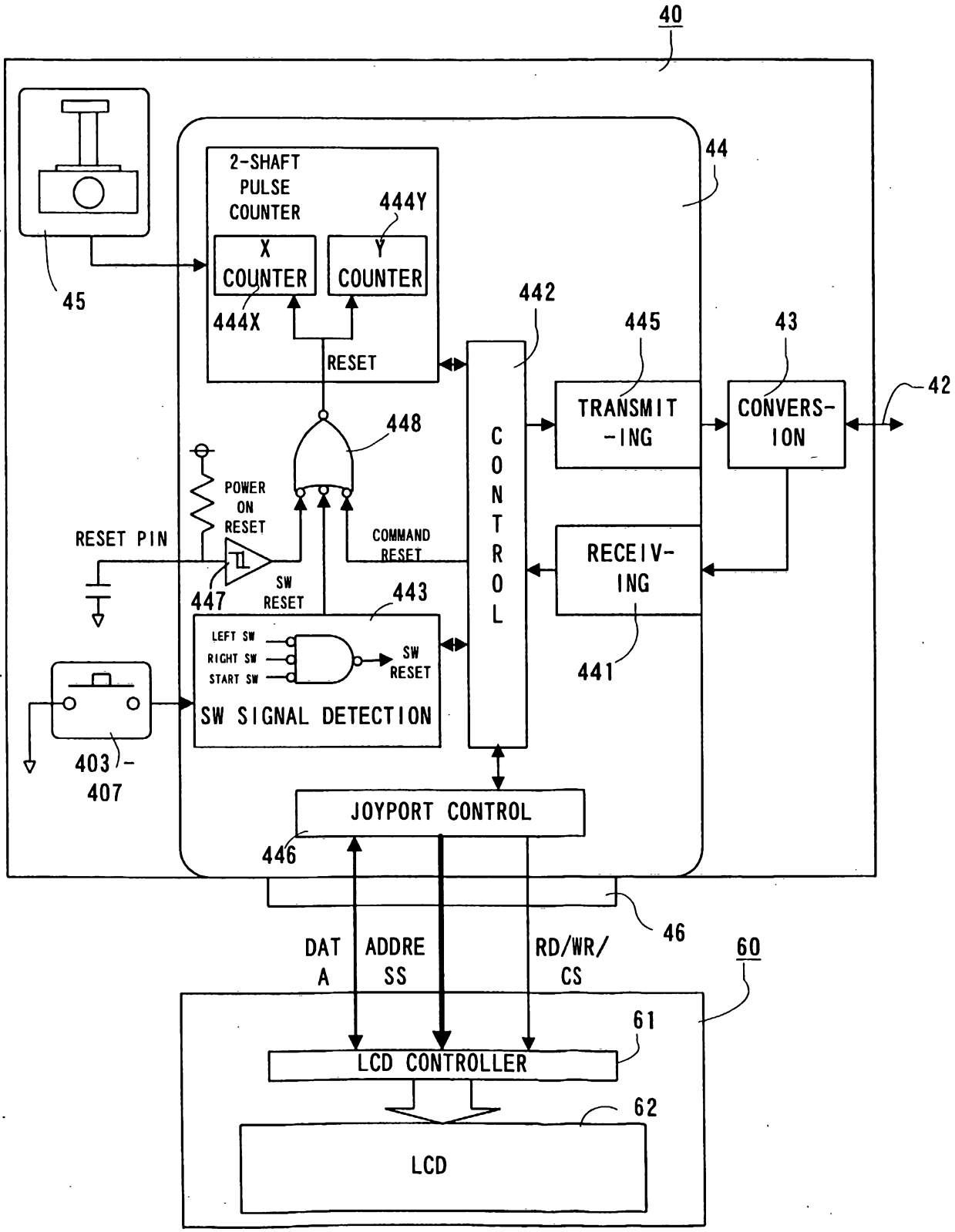
40
44
2-SHAFT PULSE COUNTER
444Y
X COUNTER
Y COUNTER
444X
RESET
45
442
445
43
42
TRANSMIT-ING
CONVERS-ION
448
POWER ON RESET
RESET PIN
COMMAND RESET
CONTROL
RECEIV-ING
447
SW RESET
443
LEFT SW
RIGHT SW
START SW
SW RESET
SW SIGNAL DETECTION
441
403-407
JOYPORT CONTROL
446
46
DATA
ADDRESS
RD/WR/CS
60
61
LCD CONTROLLER
62
LCD

FIG. 17

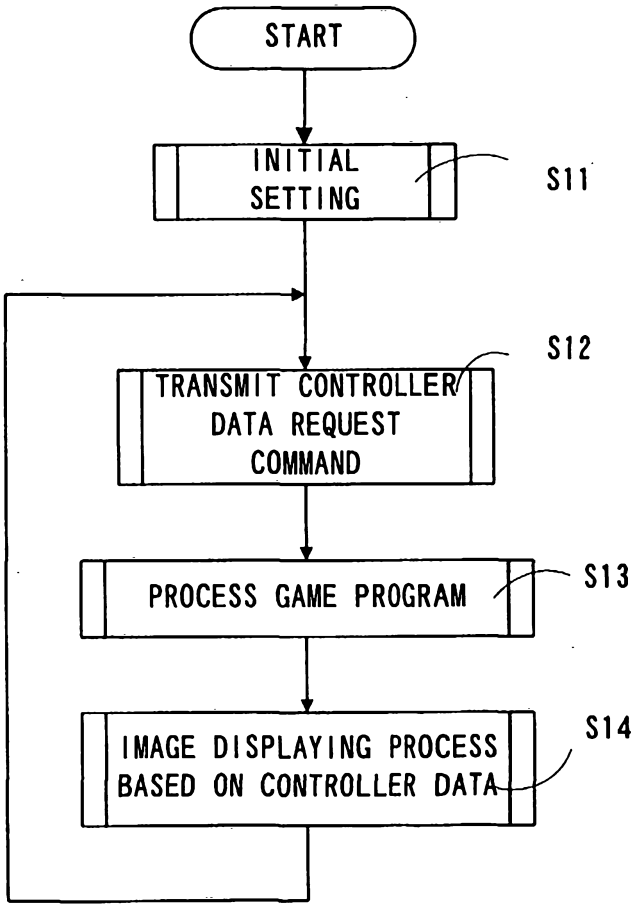
START
INITIAL SETTING
S11
TRANSMIT CONTROLLER DATA REQUEST COMMAND
S12
PROCESS GAME PROGRAM
S13
IMAGE DISPLAYING PROCESS BASED ON CONTROLLER DATA
S14

FIG. 18

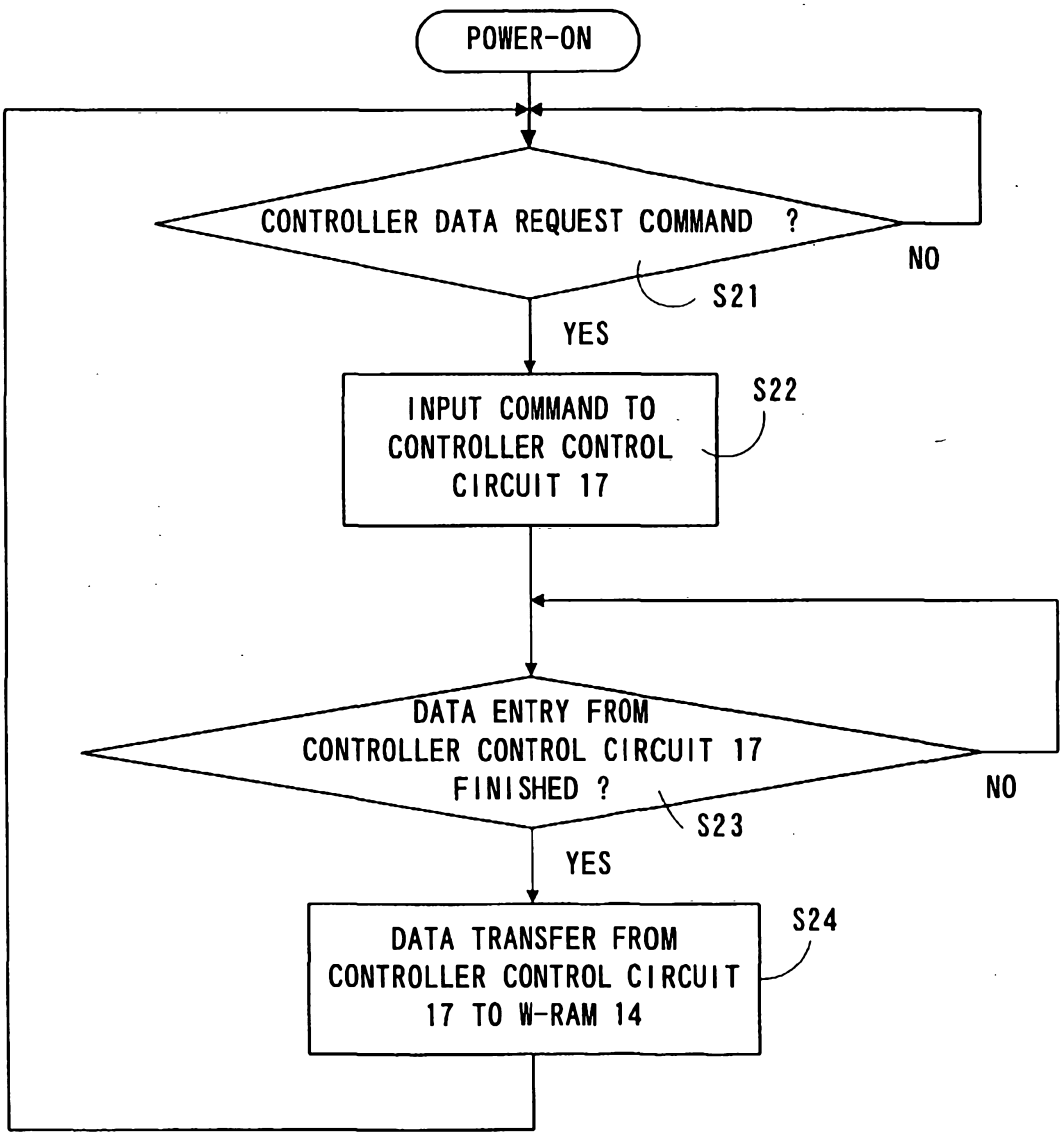
POWER-ON
CONTROLLER DATA REQUEST COMMAND ?
NO
S21
YES
INPUT COMMAND TO CONTROLLER CONTROL CIRCUIT 17
S22
DATA ENTRY FROM CONTROLLER CONTROL CIRCUIT 17 FINISHED ?
NO
S23
YES
DATA TRANSFER FROM CONTROLLER CONTROL CIRCUIT 17 TO W-RAM 14
S24

FIG. 19

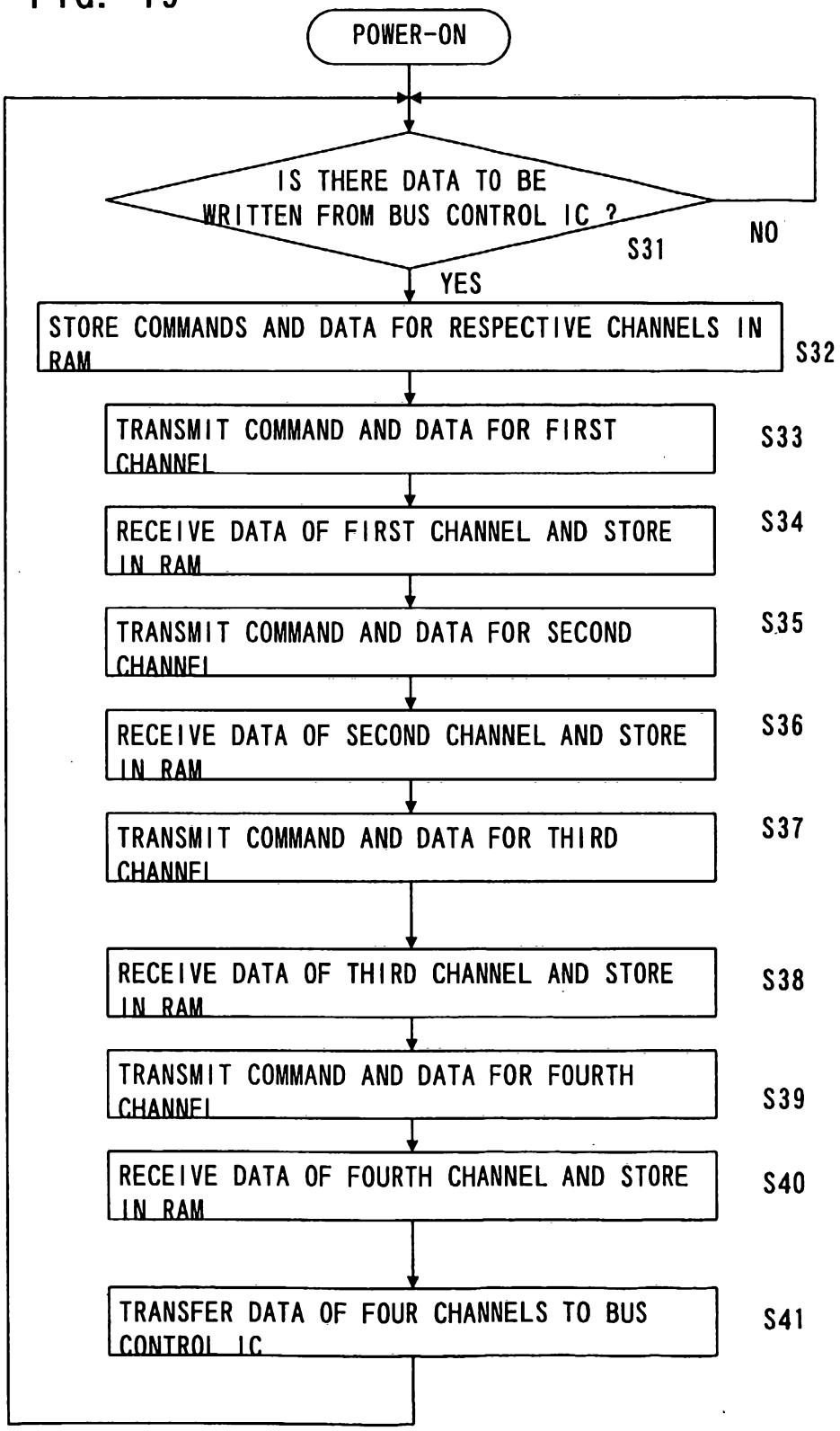
POWER-ON
IS THERE DATA TO BE WRITTEN FROM BUS CONTROL IC ?
S31
NO
YES
STORE COMMANDS AND DATA FOR RESPECTIVE CHANNELS IN RAM
S32
TRANSMIT COMMAND AND DATA FOR FIRST CHANNEL
S33
RECEIVE DATA OF FIRST CHANNEL AND STORE IN RAM
S34
TRANSMIT COMMAND AND DATA FOR SECOND CHANNEL
S35
RECEIVE DATA OF SECOND CHANNEL AND STORE IN RAM
S36
TRANSMIT COMMAND AND DATA FOR THIRD CHANNEL
S37
RECEIVE DATA OF THIRD CHANNEL AND STORE IN RAM
S38
TRANSMIT COMMAND AND DATA FOR FOURTH CHANNEL
S39
RECEIVE DATA OF FOURTH CHANNEL AND STORE IN RAM
S40
TRANSFER DATA OF FOUR CHANNELS TO BUS CONTROL IC
S41

FIG. 20

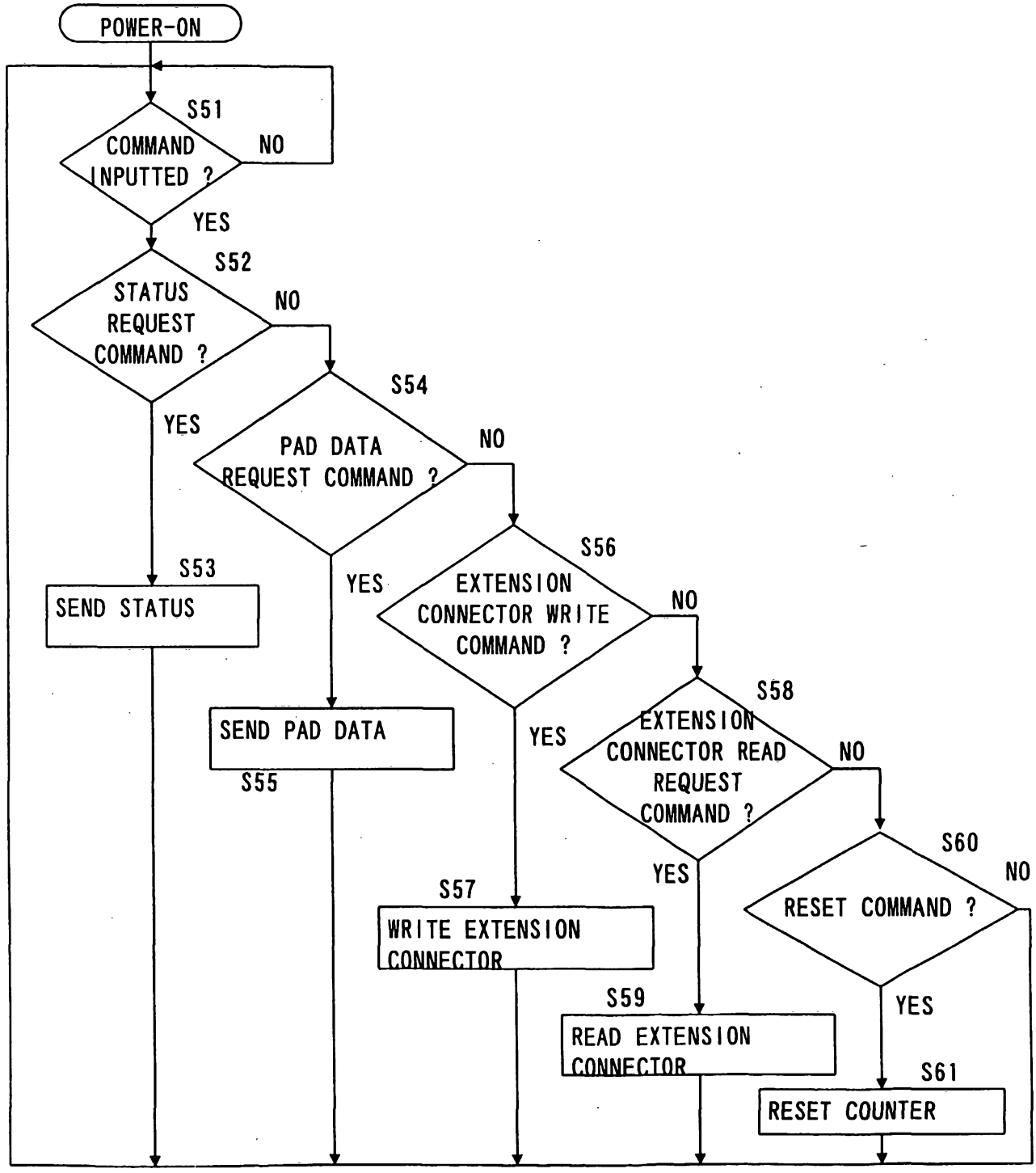
POWER-ON
S51
COMMAND INPUTTED ?
NO
YES
S52
STATUS REQUEST COMMAND ?
NO
YES
S53
SEND STATUS
S54
PAD DATA REQUEST COMMAND ?
NO
YES
SEND PAD DATA
S55
S56
EXTENSION CONNECTOR WRITE COMMAND ?
NO
YES
S57
WRITE EXTENSION CONNECTOR
S58
EXTENSION CONNECTOR READ REQUEST COMMAND ?
NO
YES
S59
READ EXTENSION CONNECTOR
S60
RESET COMMAND ?
NO
YES
S61
RESET COUNTER

FIG. 21

COMMAND 0: TRANSMITTING TYPE OF COMMAND
RECEPTION: 1 BYTE TRANSMISSION: 3 BYTES

		d7	d6	d5	d4	d3	d2	d1	d0
RECEPTION	1 BYTE	← COMMAND 0 →							
TRANSMISSION	1 BYTE	← TYPE L →							
	2 BYTE	← TYPE H →							
	3 BYTE	← STATUS →							

FIG. 22

COMMAND 1: ACCESSING STANDARD CONTROLLER
RECEPTION: 1 BYTE TRANSMISSION: 4 BYTES

		d7	d6	d5	d4	d3	d2	d1	d0
RECEPTION	1 BYTE	← COMMAND 1 →							
TRANSMISSION	1 BYTE	B	A	G	START	↑	↓	←	→
	2 BYTE	JSRST*	0	L	R	E	D	C	F
	3 BYTE	← X ORDINATE →							
	4 BYTE	← Y ORDINATE →							

* HIGH LEVEL AT TIME THAT L, R, START BUTTONS ARE SIMULTANEOUSLY DEPRESSED

FIG. 23

COMMAND 2: READ-OUT RAM
RECEPTION: 3 BYTES TRANSMISSION: 33 BYTES

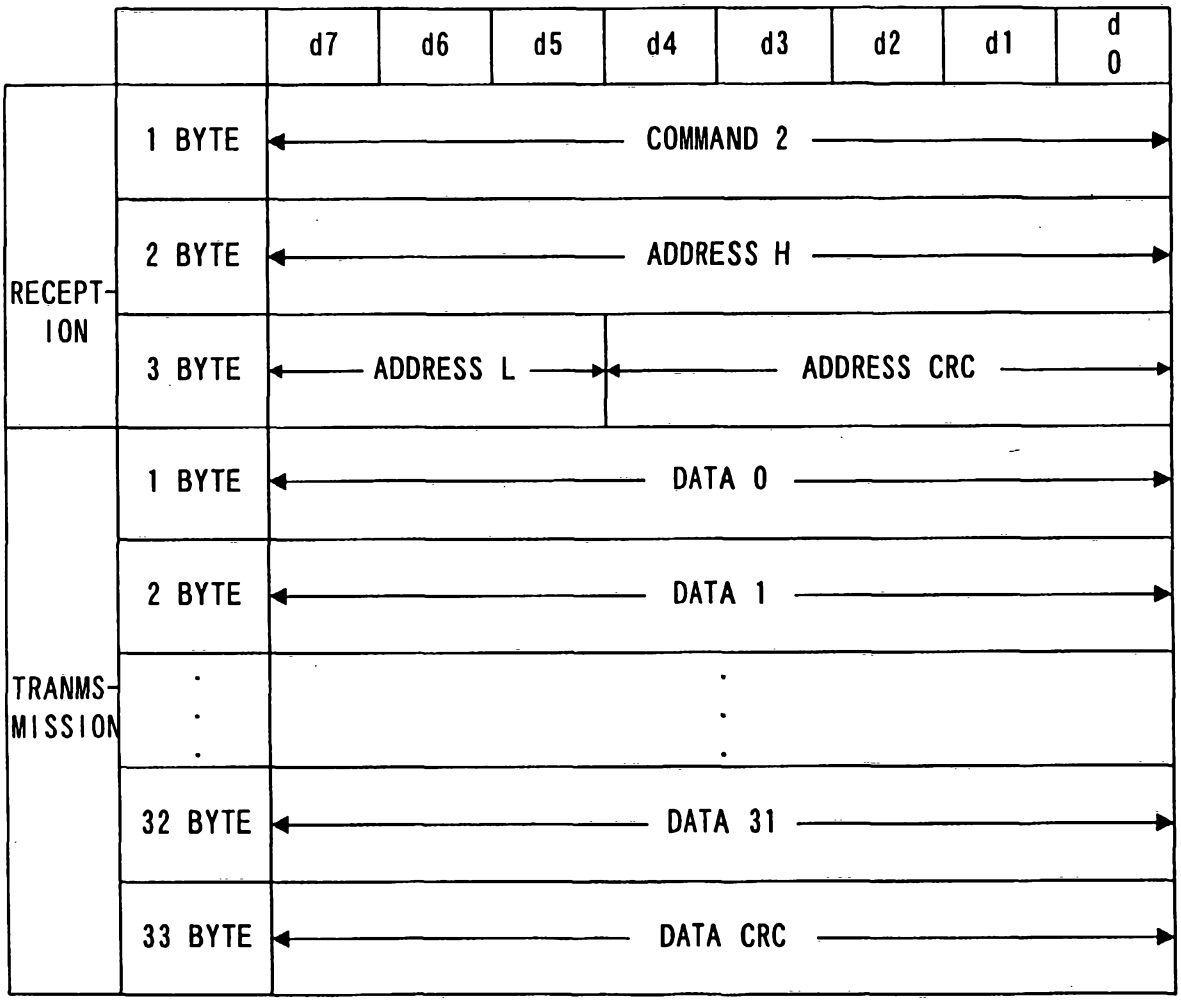

FIG. 24

COMMAND 3: WRITING INTO RAM
RECEPTION: 35 BYTES TRANSMISSION: 1 BYTE

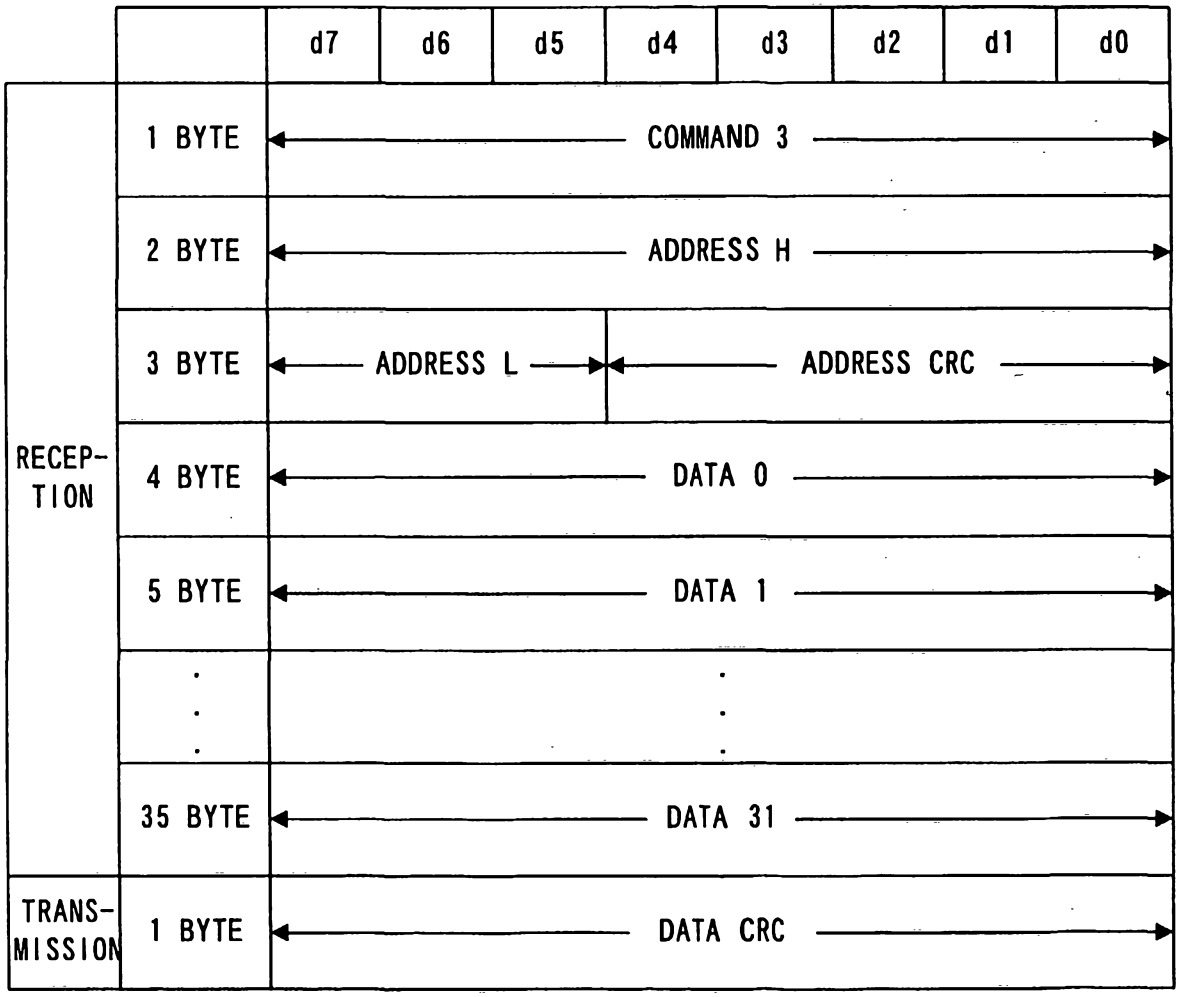

FIG. 25

COMMAND 255: CONTROLLER RESET
RECEPTION: 1 BYTE TRANSMISSION: 3 BYTES

		d7	d6	d5	d4	d3	d2	d1	d0
RECEPTION	1 BYTE	← COMMAND 255 →							
TRANSMISSION	1 BYTE	← TYPE L →							
	2 BYTE	← TYPE H →							
	3 BYTE	← STATUS →							

FIG. 26

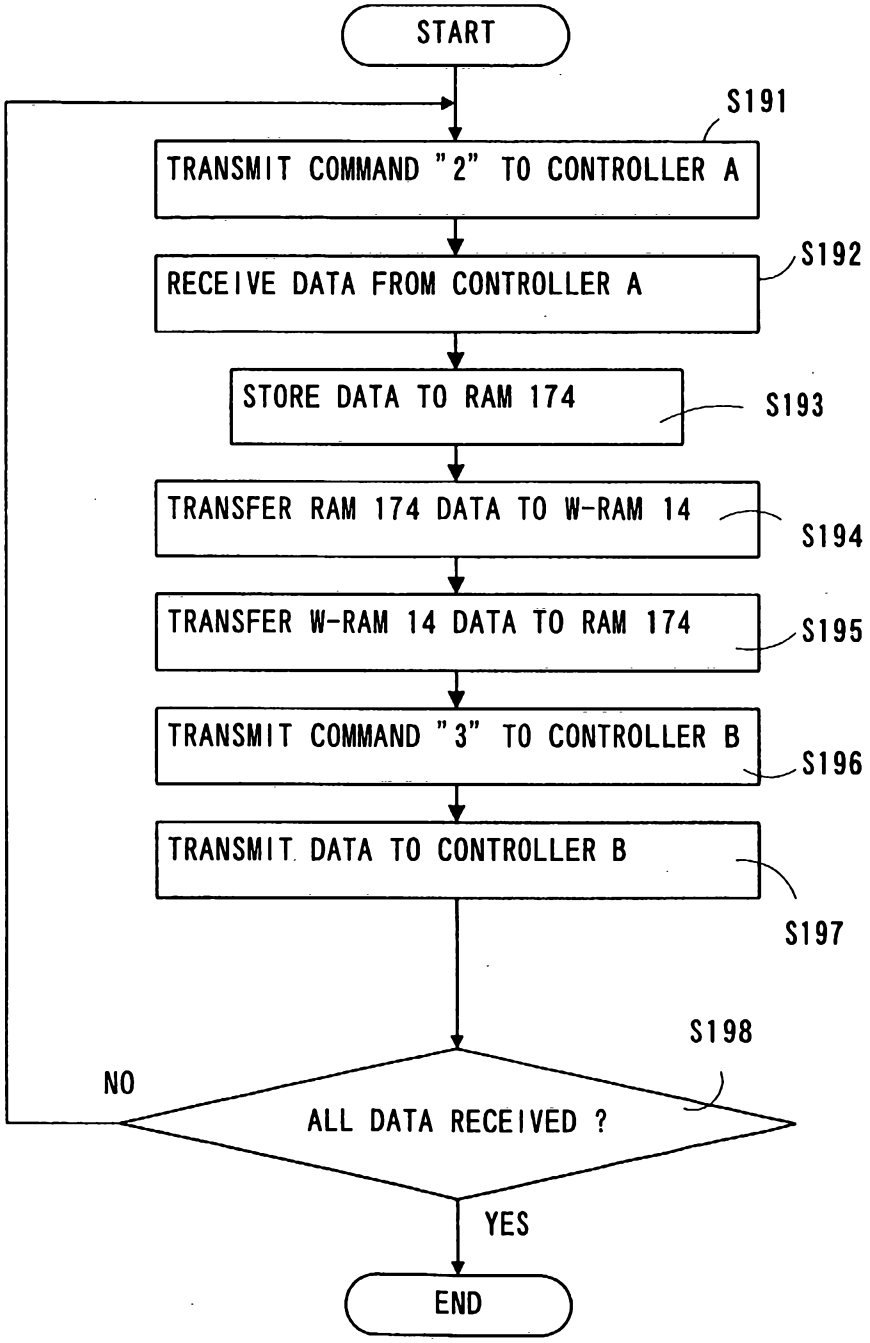
START
S191
TRANSMIT COMMAND "2" TO CONTROLLER A
S192
RECEIVE DATA FROM CONTROLLER A
STORE DATA TO RAM 174
S193
TRANSFER RAM 174 DATA TO W-RAM 14
S194
TRANSFER W-RAM 14 DATA TO RAM 174
S195
TRANSMIT COMMAND "3" TO CONTROLLER B
S196
TRANSMIT DATA TO CONTROLLER B
S197
S198
NO
ALL DATA RECEIVED ?
YES
END

FIG. 27

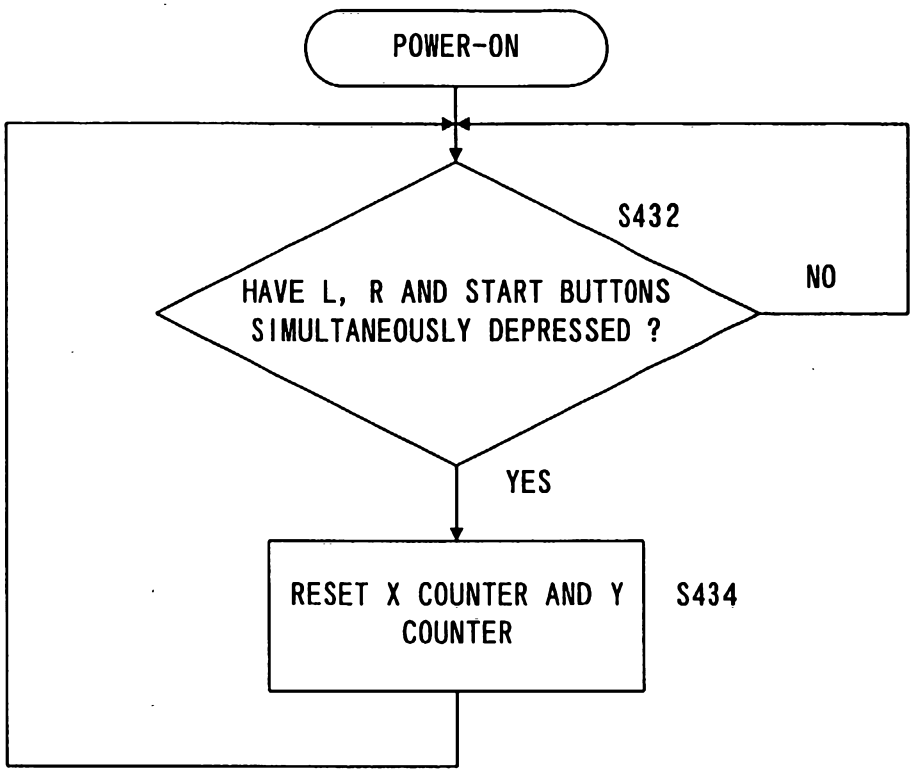
POWER-ON
S432
HAVE L, R AND START BUTTONS SIMULTANEOUSLY DEPRESSED ?
NO
YES
RESET X COUNTER AND Y COUNTER
S434

FIG. 28

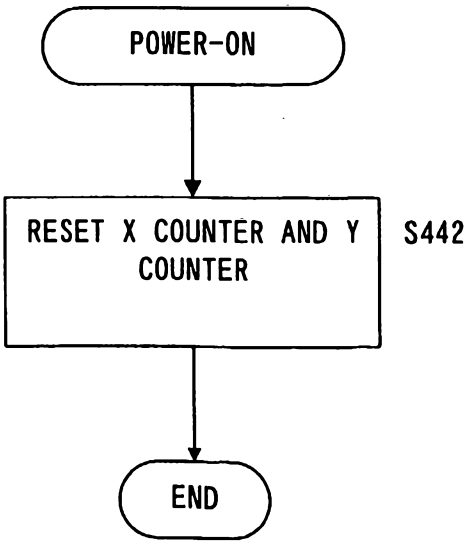
POWER-ON
RESET X COUNTER AND Y COUNTER
S442
END

FIG. 29

PHYSICAL COORDINATE OF JOYSTICK

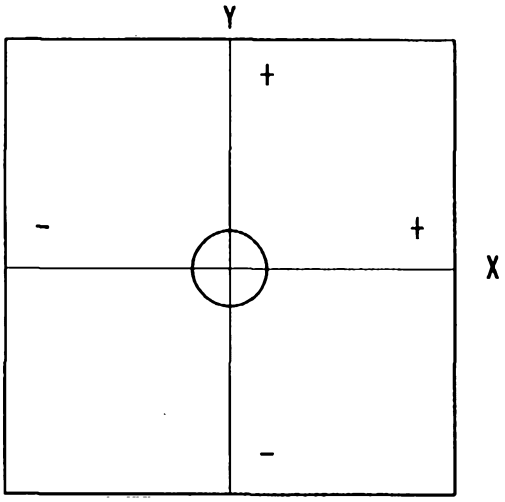

DISPLAY SCREEN

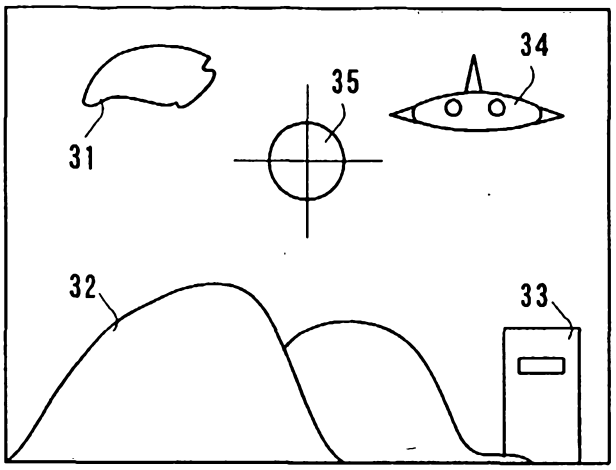

FIG. 30

PHYSICAL COORDINATE OF JOYSTICK

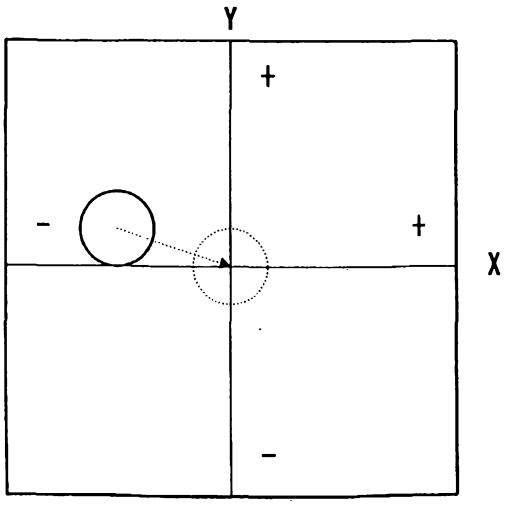

DISPLAY SCREEN

