United States Patent [19]

Prange

[11] **3,774,630**

[45] **Nov. 27, 1973**

[54] **MOBILE SEWER OR LIKE CLEANING MACHINE**

[75] Inventor: **Charles J. Prange,** Cridersville, Ohio

[73] Assignee: **Rockwell International Corporation,** Pittsburgh, Pa.

[22] Filed: **Oct. 29, 1971**

[21] Appl. No.: **193,771**

[52] **U.S. Cl.... 137/355.12,** 137/355.26, 137/355.28

[51] **Int. Cl.** **B65h 75/40**

[58] **Field of Search** ..... 137/355.12, 355.16, 137/355.17, 355.18, 355.19, 355.20, 355.21, 137/355.52, 355.23, 355.24, 355.25, 355.26, 137/355.27, 355.28, 351; 242/86.5 R

[56] **References Cited**

UNITED STATES PATENTS

3,570,526	3/1971	Fisco, Jr.	137/340
3,662,777	5/1972	Plunkett et al.	137/355.17
2,094,161	9/1937	Paddock	137/562 X
2,354,623	7/1944	Tietig	137/355.2 X
2,530,114	11/1950	Bugg et al.	137/355.23 X
3,070,324	12/1962	Bryman	242/86.5 R
3,165,109	1/1965	Hammelmann	137/355.16 X
3,225,974	12/1965	Athas	137/355.16 X
3,648,720	3/1972	Kornahrens	137/351

Primary Examiner—Samuel Scott

Attorney—William A. Strauch et al.

[57] **ABSTRACT**

A mobile sewer conduit cleaning machine has an isolated cleaning hose reel compartment enclosing a reel having a narrow large diameter drum on which the hose is randomly coiled, and a hose guide roller is centered on the body below the reel compartment.

6 Claims, 4 Drawing Figures

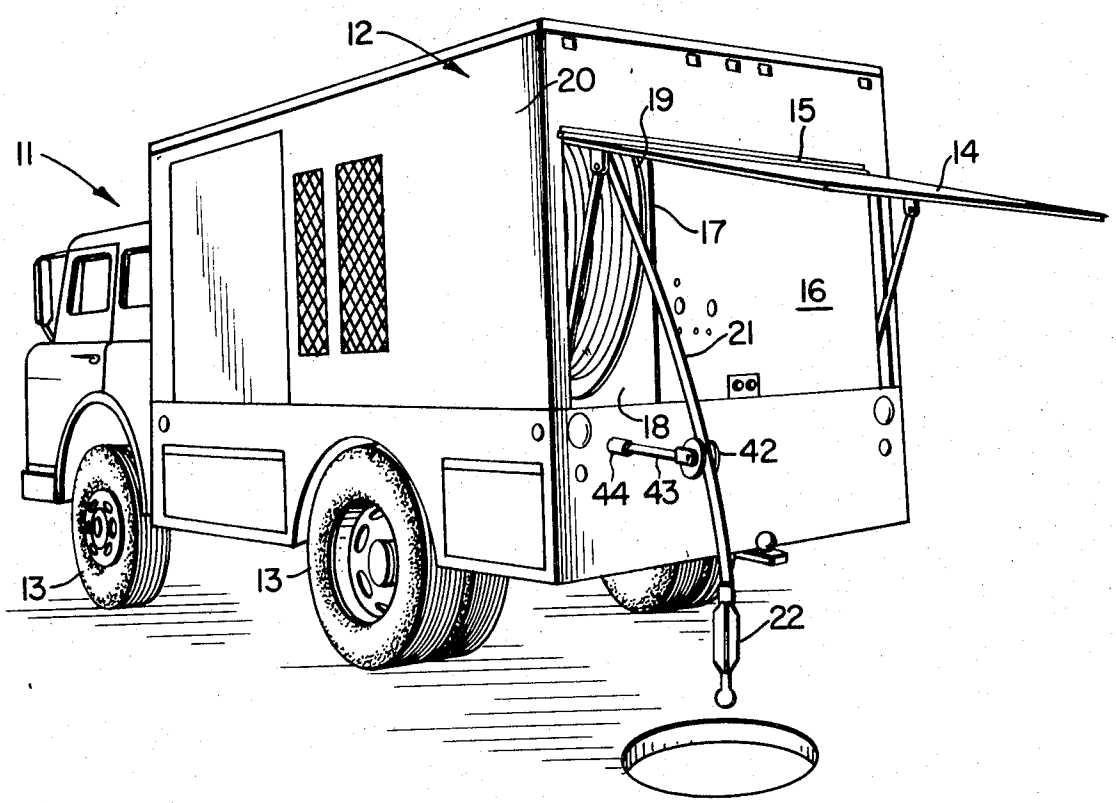

FIG. 1

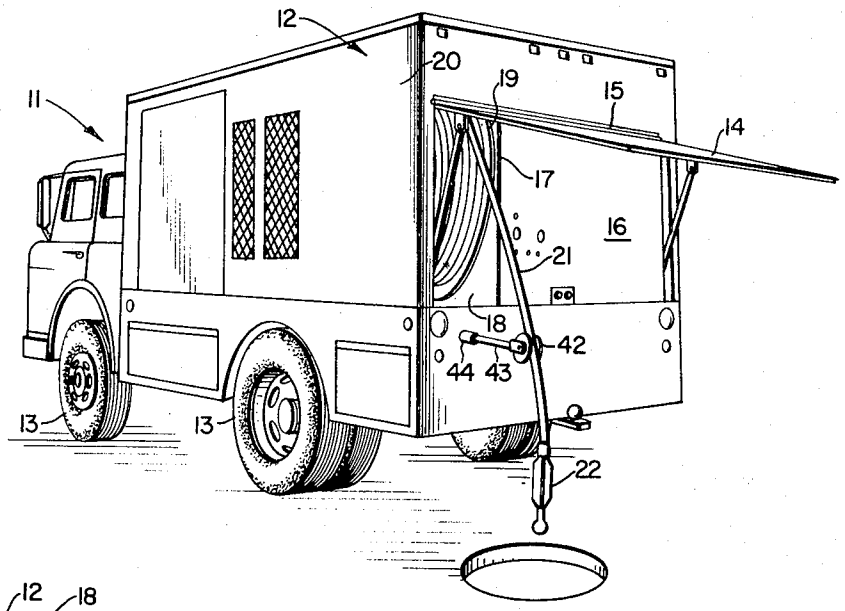

FIG. 3

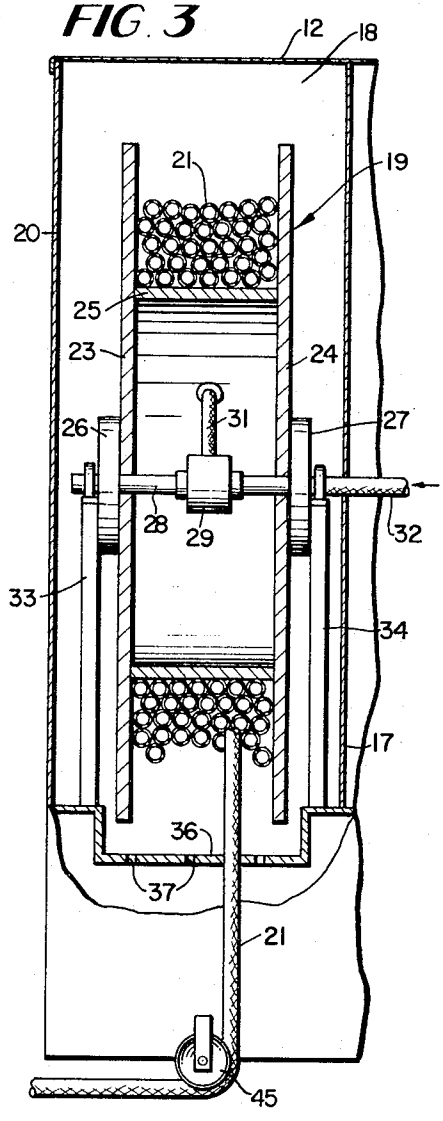

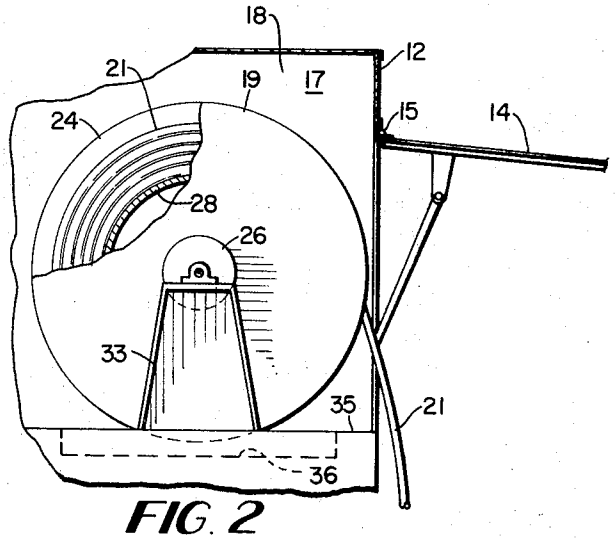

FIG. 2

FIG. 1A

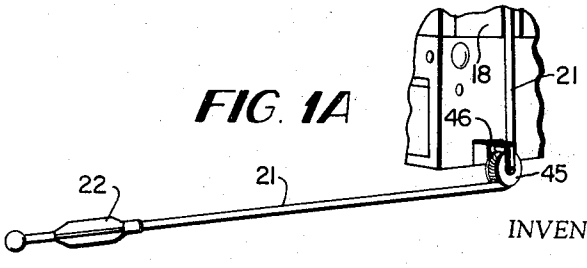

INVENTORS

CHARLES J. PRANGE

BY Strauch, Nolan, Neale, Nies & Kurz
ATTORNEYS

MOBILE SEWER OR LIKE CLEANING MACHINE

This invention relates to mobile sewer and like cleaning machines and particularly to a novel hose reel arrangement and disposition that makes it easier for the operator to handle the hose during the entire operation and provides for greater safety and cleanliness.

In its preferred embodiment the invention will be described as incorporated in a high velocity sewer conduit cleaning machine mounted on a truck body. Machines of this type have been earlier proposed. In many earlier machines the hose is coiled on a relatively wide small diameter reel drum that extends transversely of the truck body rear adjacent the pump that supplies water to the hose and the various controls for the pumping system and the reel drive. For an example of such earlier machines attention is directed to U.S. Pat. No. 3,600,225.

Some problems have arisen in connection with operation of these earlier machines. In practice the wide small diameter drum hose reel requires close attention by the operator to properly rewind a hose being drawn out of a manhole for example, and in most cases is provided with a bifurcated arm pivotally mounted on a horizontal member below the reel. The operator uses this arm to pull the hose to the left or right to start and finish winding each layer of hose on the reel. Because of the width of the reel, more specifically, the angle of deviation from a normal to a guide roller near the bottom of a manhole, some lateral movement is required to wrap the last 2 to 3 coils of each layer at each end of the reel to produce a series of superimposed, level layers of cleaning hose.

The present invention obviates this problem and eliminates the need for such a bifurcated traversing arm by provision of a relatively narrow large diameter drum reel on which the hose may be wound at random with a minimum of attention from the operator, and this is a major object of the invention.

Other problems incident to operation of the earlier machines involved the circumstance that the hose being withdrawn from the sewer often carries dirt that during winding or when dry becomes transferred to the relatively exposed pump system and controls, and when the hose surface is cleaned by directing a stream of water on it the controls may be subjected to being sprayed with dirty water. Further, the exposed wide reel presents a safety risk to the operator winding hose on it.

The foregoing problems are mainly avoided in the invention wherein the narrow large diameter drum reel is mounted in its own compartment whereby the pump system and controls are protected against dirt from the hose, either during winding or cleaning, and this is another important object of this invention.

Another important object of this invention is to provide a safer working environment for the operator and this is accomplished through the use of a narrow large diameter drum reel mounted forward of the rear of the truck body in its own compartment.

BRIEF DESCRIPTION OF DRAWINGS

FIG. 1 is a generally perspective view of a mobile sewer or like pipe cleaning unit incorporating the machine of the invention according to a preferred embodiment;

FIG. 1A is a fragmentary view showing a different hose guide arrangement;

FIG. 2 is a fragmentary side elevation partly in section showing rotatable mounting of the reel;

FIG. 3 is an enlarged partly sectional fragmentary view looking in at the rear of the mobile unit and illustrating the narrow large diameter drum reel and its compartment.

PREFERRED EMBODIMENTS

FIG. 1 illustrates the invention mounted on a mobile vehicle, here a truck **11** comprising a body **12** supported on road engaging wheels **13.** At the rear of body **12,** a door **14** is hinged about an upper horizontal axis **15** to uncover a control panel **16** disposed at one side of an internal vertical compartment defining wall **17.** At the other side of wall **17** is a relatively narrow reel compartment **18** wherein is mounted a reel **19** on which is coiled a hose **21.** The body side wall **20** is one side wall of compartment **18.** Compartment **18** extends for only a minor portion of the body width so that maximum space is provided for a pump system. Hose **21** terminates at its free outer end in a conventional nozzle **22** adapted to be inserted into the sewer or other conduit to be cleaned.

As shown, reel **19** comprises parallel large diameter sides **23** and **24** between which rigidly extends large diameter cylindrical drum **25.** The hose is coiled around drum **25.** The reel is mounted for rotation about a horizontal axis, being supported as by bearings **26, 27** on a stationary hollow shaft **28.** A manifold **29** that is rotatable with respect to shaft **28** is connected by a conduit **31** through drum **25** to the inner end of the hose on reel **19.** Water is supplied under pressure from a pump (not shown) located behind the control panel through a conduit **32** into the interior of shaft **28** where it is transmitted through manifold **29** to the end of the hose on reel **19.**

Shaft **28** is preferably mounted on support brackets **33, 34** upstanding from the normal floor level **35** within the body. As shown in FIG. **3,** the floor is formed below the reel with a well **36** that extends longitudinally within the body. The lower sector of the reel **19** extends slightly into the well, and the bottom of well **36** is provided with one or more apertures **37** for drainage.

Wall **17** provides a barrier that isolates the reel compartment **18** from the internal body space behind panel **16,** and it therefore protects the pump, the motor for driving the pump and reel, the control valves, and related hydraulic and electrical equipment from exposure to dirt and moisture that may be introduced into the reel compartment when the dirt laden hose is withdrawn from a sewer line or the like and coiled on the reel. It also enables the entire reel compartment and the hose to be quickly and thoroughly flushed and cleaned as by a spray of water from another hose without affecting the equipment behind control panel **16.**

A grooved guide roller **42** is mounted on the body rear wall for rotation on an axis parallel to the reel axis below the approximate lateral center of the reel compartment for guiding the hose to and from reel **19.** Roller **42** is mounted on the end of a rod **43** that is adjustably disposed in body socket **44** for displacement of the roller **42** to be disposed directly over the manhole. This obviates the necessity of backing the truck to a position where the periphery of the reel overhangs the manhole as was the case with earlier machines.

Alternately, as shown in FIG. 1A, the hose may pass down over a centrally located groove guide roller **45** on a body bracket **46** mounted for rotation on an axis perpendicular to the reel axis. This enables the hose to be guided toward a laterally offset manhole while maintaining the centralized winding advantages.

In a practical construction, where the invention is used in a sewer cleaning machine, Hose **21** is about 1½ inches in diameter, and it is coiled at random on drum **25** which is about 32 inches in diameter. The axial length of drum **25** is about 12 inches between sides **23, 24** so that the ratio of drum diameter to axial width is advantageously between 2 to 1 and 3 to 1. The large diameter sides **23, 24** are about **56** inches in diameter.

In the earlier machines mentioned above the reel drum diameter was about 22 inches and the drum had an axial width between side walls of about 30 inches, that is the drum width was greater than its diameter.

Thus as compared with earlier machine hose mounting reel assemblies, the reel of the invention is advantageously narrower and of larger drum diameter, while having the capacity of holding about the same length of hose (about 450–500 feet). This enables it to be isolated from the other parts of the machine in a vertical laterally narrow compartment. Moreover this arrangement simplifies winding of the cleaning hose on the reel because the hose is guided onto the narrow reel by the centrally located guide roller and this frees the operator to attend to the controls and other matters.

The compartmentalized narrow, large diameter reel feature also offers the following specific advantages:

Pressure Drop. High pressure cleaning hose wrapped on the large diameter reel drum does not distort in cross section as much as it does on a smaller drum so there is less pressure drop in that part of the hose coiled on the drum. Water is normally provided to the hose at a pressure of about 1,000 psi and often as high as 1,200 to 1,400 psi in sewer cleaning machines.

Sanitation. The operation is more sanitary if the operator does not have to traverse the hose onto the drum since he does not have to remain in close proximity to the dirt laden hose as it is withdrawn from a manhole. Also the reel compartment may be flushed thoroughly.

Safety. The compartmentalized arrangement with the reel slightly forward of the rear of the truck provides a safer working environment. If a leak or break develops in the hose, the operator is not as directly exposed to the possibility of personal injury as he would be with a conventional unit. There are only **7** or **8** coils of hose exposed on the outer layer of the large diameter drum as compared with **19** or **20** on the conventional drum.

Servicing. Compartmentalizing the narrow, large diameter reel at one side of the truck permits access from the rear to service the pump and other equipment behind the control panel and keeps this equipment dry and free of dirt. The control panel pivots about a vertical hinge (not shown) to provide access to the pump and other equipment for inspection and maintenance service checks.

The invention may be embodied in other specific forms without departing from the spirit or essential characteristics thereof. The present embodiments are therefore to be considered in all respects as illustrative and not restrictive, the scope of the invention being indicated by the appended claims rather than by the foregoing description, and all changes which come within the meaning and range of equivalency of the claims are therefore intended to be embraced therein.

What is claimed and desired to be secured by Letters Patent is:

1. In a mobile sewer cleaning or like machine, having an equipment mounting body, means within said body defining a rearwardly open reel compartment that extends substantially the height of said body but the width of which is materially less than said height, a hose reel mounted for rotation about a generally horizontal axis within said compartment, said reel comprising a narrow width drum extending between parallel sides, the drum diameter being materially greater than the axial width of the drum, a cleaning hose randomly coiled on said drum having its inner end adapted for coupling to a source of cleaning liquid under pressure and means defining a downwardly recessed drainage well in the bottom of said compartment directly below said reel.

2. In the machine defined in claim **1,** a hose guide roller mounted on a support projecting longtudinally from the rear of said body substantially in vertical alignment with the lateral center of said reel drum.

3. In the machine defined in claim **2,** said support being adjustable to displace said roller toward or away from said body.

4. In a mobile sewer or like cleaning machine, a support vehicle, means defining a rearwardly open hose reel comparement on said support vehicle, said compartment having a width laterally of the vehicle that is small relative to its height, means mounting a cleaning hose reel in said compartment for rotation about a horizontal axis, said reel having a hose receiving drum the diameter of which is at least twice as large as its axial width, and a hose guide roller mounted on said support vehicle rearwardly of and below said drum compartment, said guide roller being positioned intermediate the sides the drum, whereby during winding the hose will randomly coil along the entire width of said drum without intermediate guiding.

5. In the machine defined in claim **4,** means defining a well in the floor of said compartment below the reel within the reel compartment, said well being formed with drainage means.

6. In the mobile machine defined in claim **4,** said guide roller being adjustable toward and away from said support vehicle whereby to dispose said hose for directly descending a manhole or the like while maintaining the support in a non-interfering location.

* * * * *