Feb. 3, 1931. J. F. FITCH 1,791,078

VENDING APPARATUS

Filed Sept. 11, 1928 5 Sheets-Sheet 1

Fig. 1.

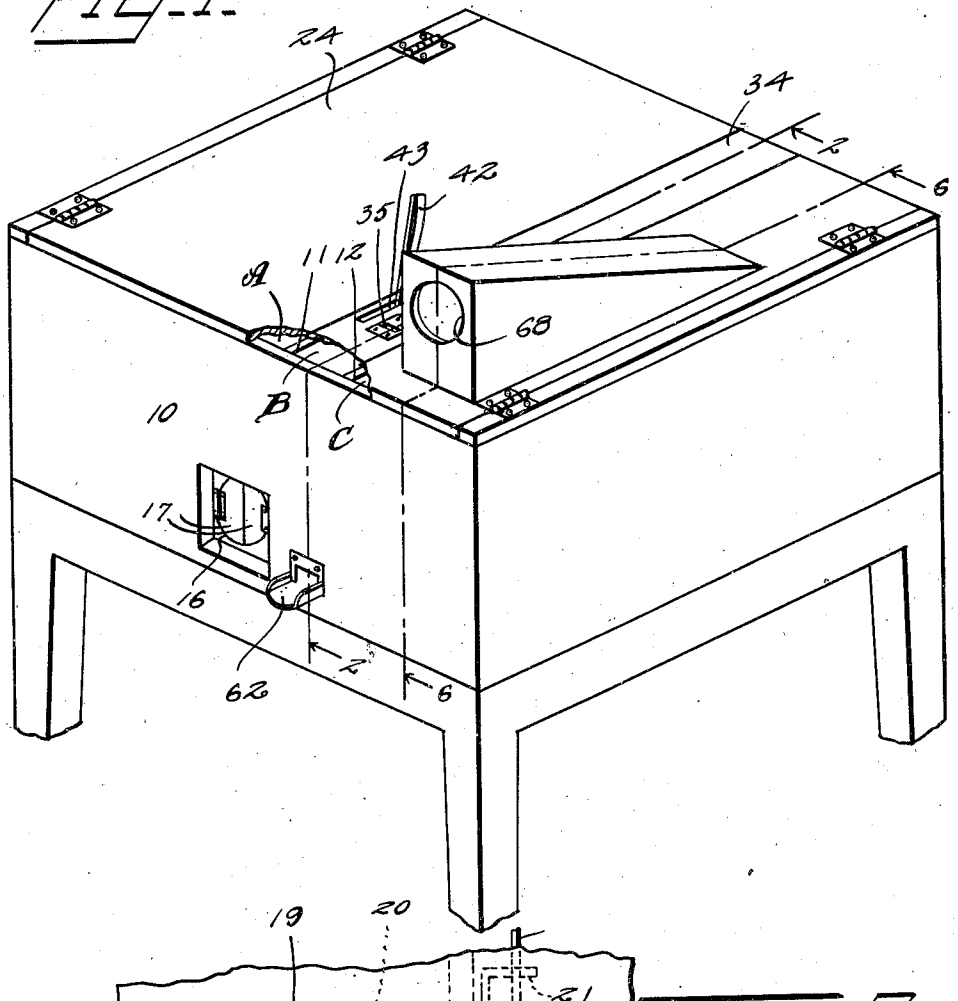

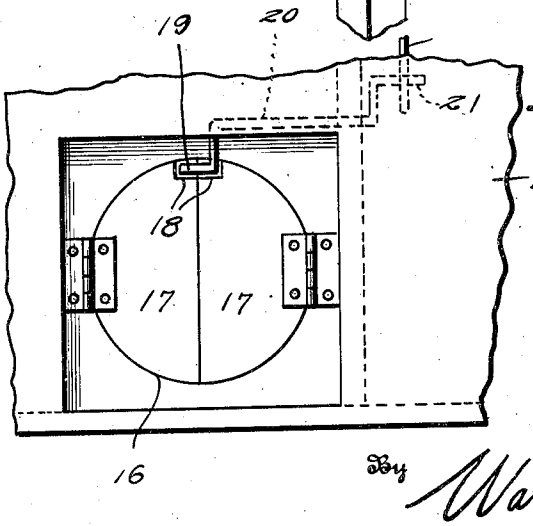

Fig. 7.

Inventor

J. F. Fitch

By Watson E. Coleman

Attorney

Feb. 3, 1931. J. F. FITCH 1,791,078

VENDING APPARATUS

Filed Sept. 11, 1928 5 Sheets-Sheet 2

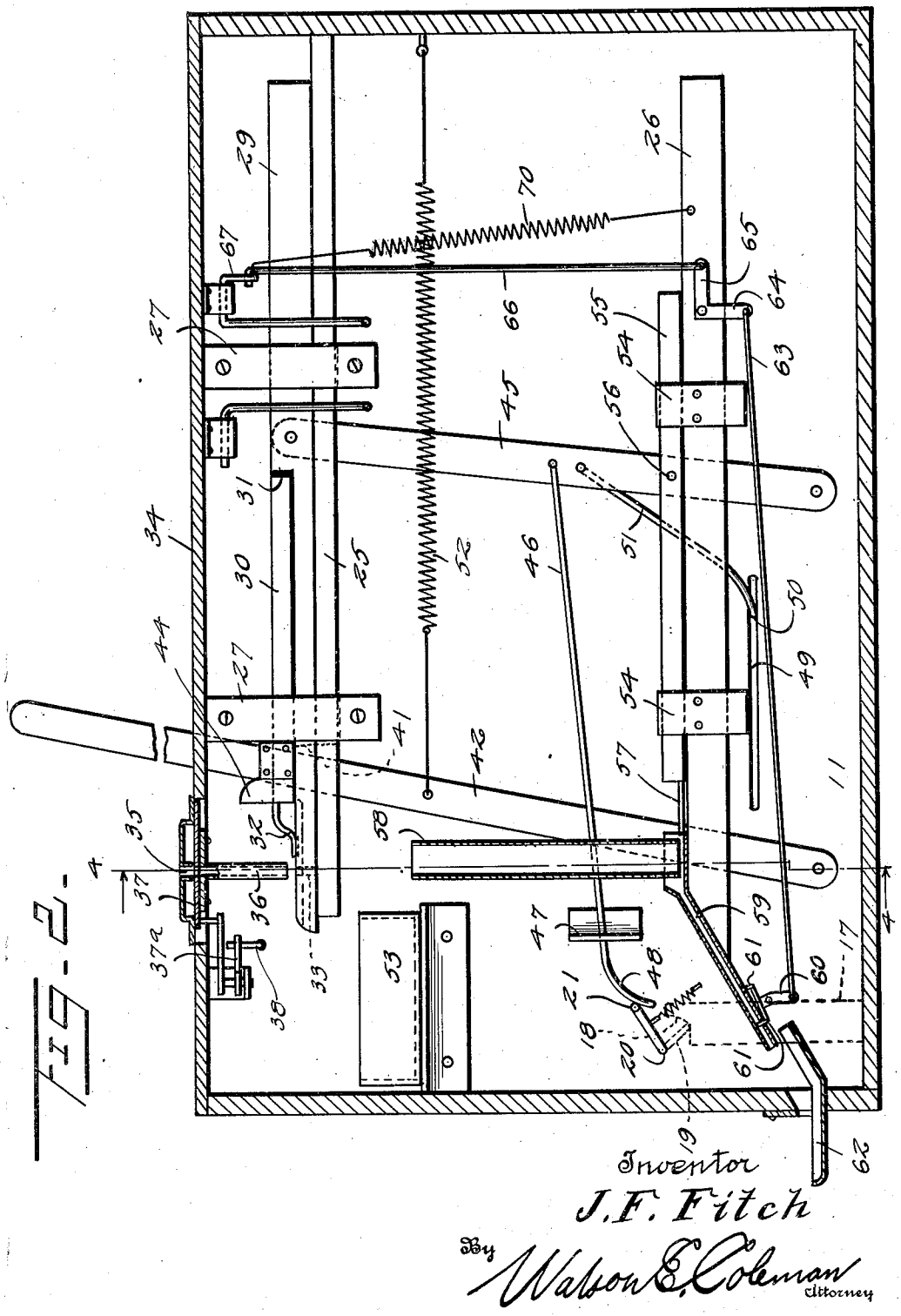

Fig. 2.

Inventor
J. F. Fitch
By Watson E. Coleman
Attorney

Feb. 3, 1931. J. F. FITCH 1,791,078

VENDING APPARATUS

Filed Sept. 11, 1928 5 Sheets-Sheet 3

FIG. 4.

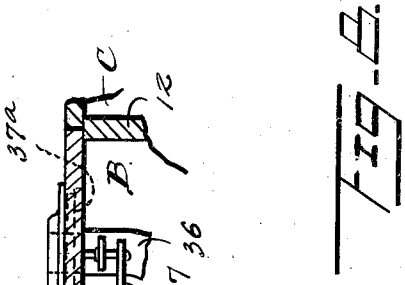

FIG. 3.

Inventor

J. F. Fitch

By Watson E. Coleman

Attorney

Feb. 3, 1931. J. F. FITCH 1,791,078

VENDING APPARATUS

Filed Sept. 11, 1928 5 Sheets-Sheet 4

Fig. 4.

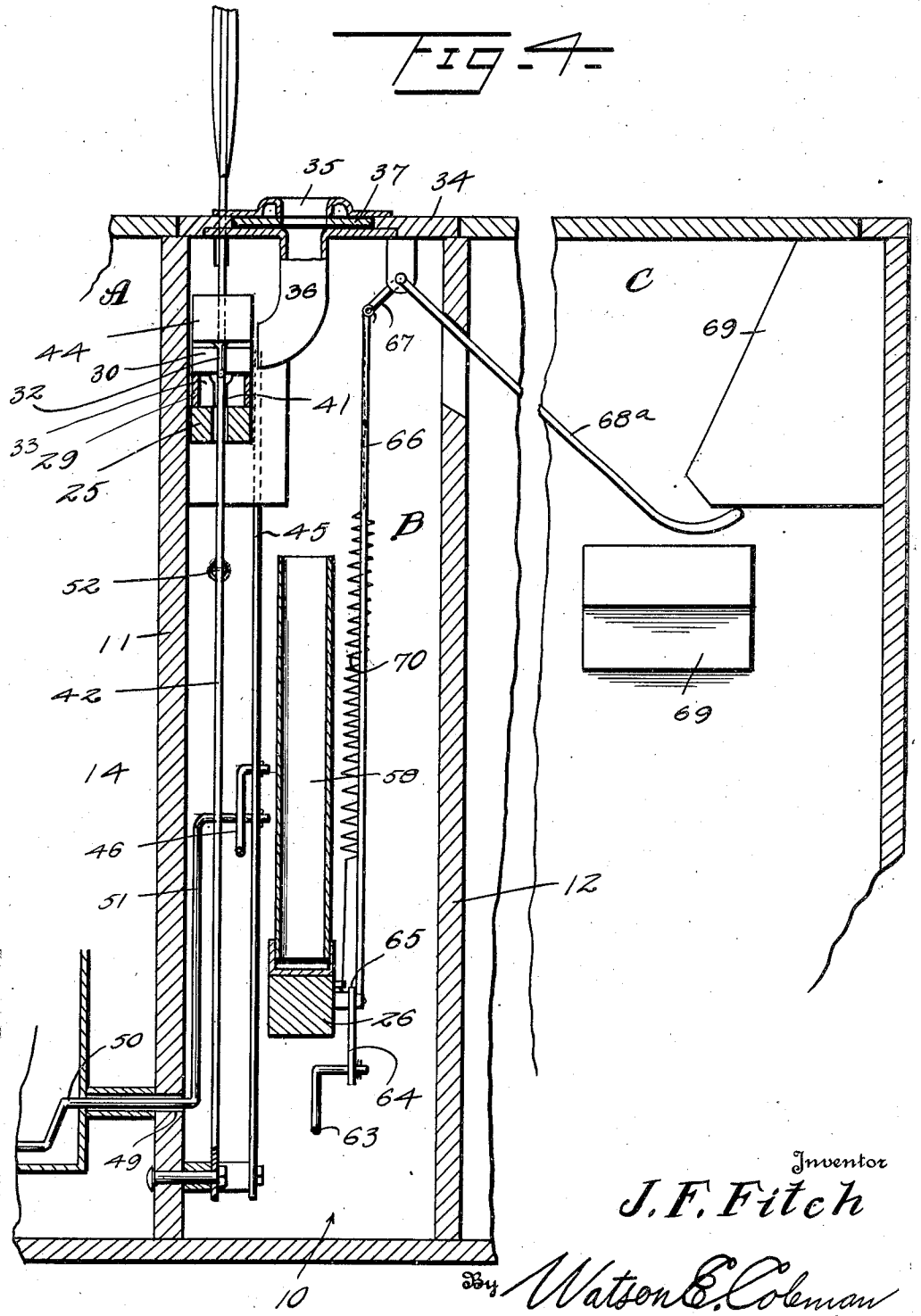

Inventor

J. F. Fitch

By Watson E. Coleman

Attorney

Feb. 3, 1931. J. F. FITCH 1,791,078

VENDING APPARATUS

Filed Sept. 11, 1928 5 Sheets-Sheet 5

Fig. 5.

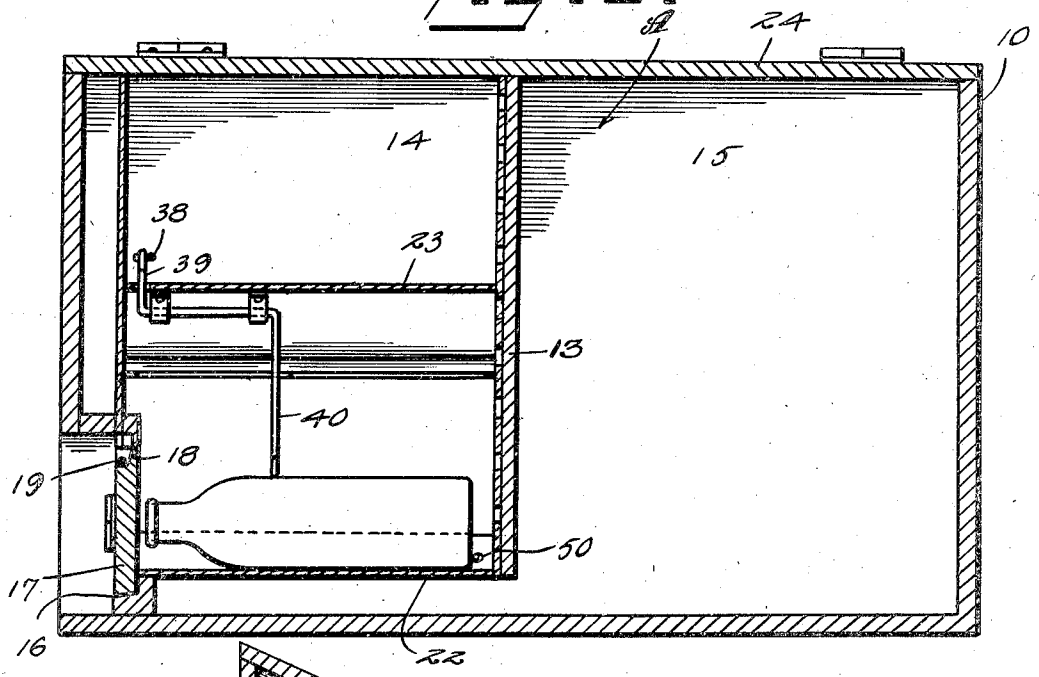

Fig. 6.

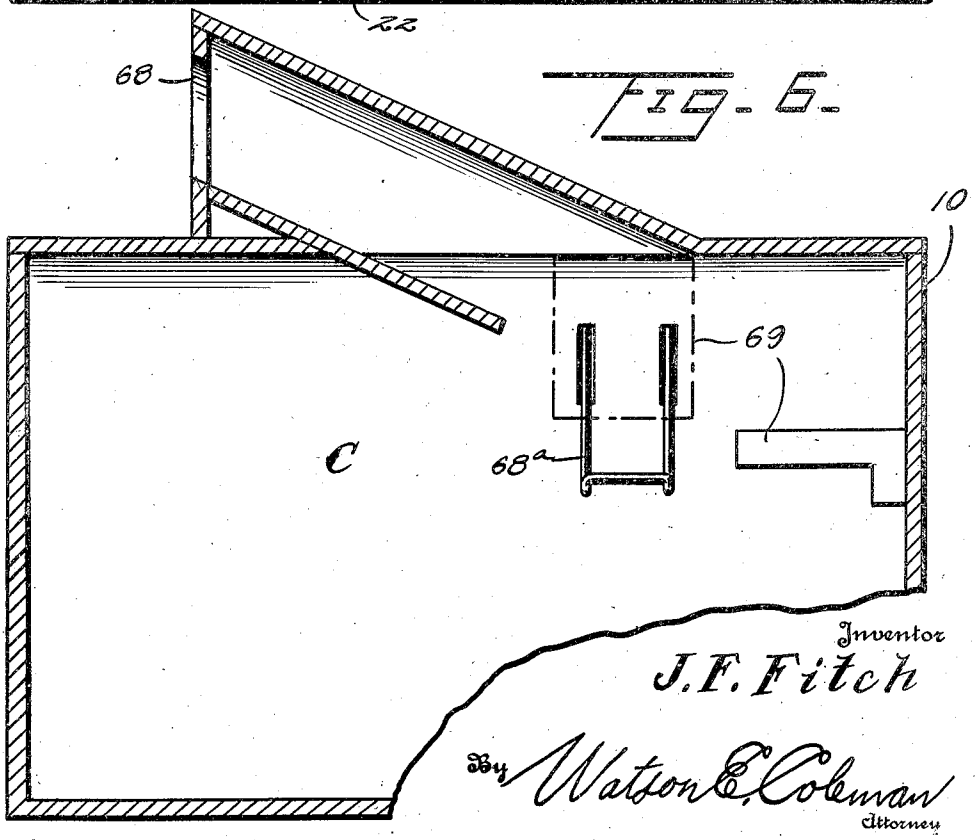

Inventor

J. F. Fitch

By Watson E. Coleman

Attorney

Patented Feb. 3, 1931 1,791,078

UNITED STATES PATENT OFFICE

JOHN F. FITCH, OF BUCHANAN, VIRGINIA

VENDING APPARATUS

Application filed September 11, 1928. Serial No. 305,160.

This invention relates to apparatus for vending bottled drinks, and has for an important object thereof the provision in a device of this character of an arrangement promoting the return of empty bottles to the dealer.

A further and more specific object of the invention is to provide in a device of this character a structure such that the discharge of the filled bottle is accompanied by the disposition of a change coin adjacent the discharge orifice, and means are provided whereby the return of the bottle when empty to the machine releases this coin and permits it to pass through the discharge orifice to the person returning the bottle.

A further object of the invention is to provide a structure of this character which by the use of simple and compact mechanism, performs not only the objects above described, but likewise accomplishes a discharge of the bottle and provides a means preventing the insertion of a coin to the machine from which the bottle contents have been completely withdrawn.

A still further object of the invention is the provision of a construction of this character which will permit the bottled goods to be conveniently cooled and in which the operating mechanism is segregated from the cooling apparatus in such fashion that there is little danger of deterioration of the working parts thereof from accumulated dampness.

Still another object of the invention is the provision in a construction of this character, of an arrangement such that the working parts and the several compartments receiving the bottled goods, the empty bottles, and ice, may be independently accessible without disturbing or disarranging the contents of any other compartment.

These and other objects I attain by the construction shown in the accompanying drawings, wherein for the purpose of illustration is shown a preferred embodiment of my invention, and wherein:—

Figure 1 is a perspective view of vending apparatus constructed in accordance with my invention;

Figure 2 is a section on the line 2—2 of Figure 1;

Figure 3 is a detail sectional view through the full bottle chamber;

Figure 4 is a section on the line 4—4 of Figure 2;

Figure 5 is a section on the line 5—5 of Figure 3;

Figure 6 is a section on the line 6—6 of Figure 1;

Figure 7 is a fragmentary front elevation showing the doors controlling the full bottle discharge opening, and

Figure 8 is a view partly in plan and partly in section of a portion of the means for closing the coin slot after the last bottle of the machine has been dispensed.

Referring now more particularly to the drawings, the numeral 10 generally designates a cabinet which, by parallel partitions 11 and 12, is subdivided into three main compartments, designated A, B, and C, respectively. The compartment A by a partition 13, perpendicular to the partitions 11 and 12, is further subdivided into two lesser compartments, one of which forms the bottle compartment 14 and the other of which forms an ice compartment 15.

Adjacent the partition 11 the compartment 14 is provided with a discharge opening 16 controlled by a pair of hinged semi-circular doors 17, the upper edges of which are provided with notches 18 receiving a crank 19 formed upon one end of a shaft 20, journaled in and disposed transversely of the partition 11. The opposite end of this crank which extends into the compartment B, is formed with a second crank 21, the purpose of which will hereinafter appear. The crank 20 when engaged with the doors 17, holds these doors against outward movement.

Within the compartment 14 are disposed inclined trackways, herein disclosed as two in number, and designated 22 and 23. The trackway 22, or lowermost trackway, extends from the wall of compartment 14, which is remote from the partition 11, downwardly and inwardly toward the partition 11, and has its lower end slightly spaced from this

partition and at the opposite side of the door opening 16.

The trackway 23 extends from the partition 11 adjacent the upper end thereof outwardly and downwardly, and has its outer end disposed in such spaced relation to the outer wall of compartment 14 that a bottle of the type handled by the machine may pass between this wall and the end of the trackway and so be discharged upon the upper end of trackway 22. It will be obvious that the trackways 22 and 23 and the entire space above the trackway 23 may be filled with bottles to be vended and that as bottles are removed from the opening 16 space is provided in which bottles upon the trackway 22 may move downwardly permitting a further bottle to be passed on the trackway 22 from the storage space above.

The compartment A is provided with a hinged cover 24 which when lifted affords access to the bottle and ice compartments 14 and 15.

The compartment B constitutes a casing for the control and operating mechanism and has arranged therein a pair of vertically spaced superimposed horizontal supports, designated at 25 and 26 respectively. The support 25 has associated therewith guide elements 27 which combine with the adjacent wall of the partition 11 for the guidance of a main operating bar 29 and an auxiliary operating bar 30. The auxiliary operating bar slides upon the upper surface of the main operating bar 29 and is relatively short. At one end it is adapted to abut a shoulder 31 formed upon the operating bar 29 during its movement in one direction, and at its opposite end it is provided with a prod or contactor 32. This contactor extends over the forward end of operating bar 29, and slightly in advance of the normal position of the forward end of this contactor, this operating bar is formed with a slot 33 of a size to receive the coin by means of which the machine is released for operation.

The top wall of the compartment B, which is in the form of a hinged cover 34, is provided with a coin slot 35, and has arranged beneath this coin slot a tube 36 for directing an inserted coin to the slot 33. Between this tube and the coin slot 35 a slide 37 is disposed, this slide having an opening for alinement with the coin slot 35 and tube 36 and being controlled by a bell-crank lever 37*a*. This bell-crank lever 37*a* is actuated through a link 38 projecting thru the partition 11 and engaging one arm 39 of a bell-crank lever at present shown as supported from the upper trackway 23 of compartment 14. The second arm 40 of this lever is adapted to rest upon the lowermost bottle of trackway 22 or that bottle which is so positioned that it may be discharged. If no bottle is present at the position normally occupied by the end of this arm, the arm drops, shifting the slide 37 and preventing communication between the coin slot and the tube.

The control rod 29 has its forward ends slotted as indicated at 41, and through this slot extends an operating lever 42, the lower end of which is pivoted to the partition 11 adjacent the lower end thereof, and the upper end of which extends through a slot 43 formed in the cover 34. The forward end of auxiliary control bar 30 is likewise slotted for the passage of this lever. At its forward end the auxiliary control bar has a cross head 44 with which the lever contacts so that this auxiliary control bar will at all times follow the movements of the lever. A second lever 45 arranged rearwardly of the first named lever, is pivoted at its lower end to the partition 11, and at its upper end to the control bar 29. This second lever has connected thereto a thrust rod 46 which extends through a guide 47 carried by the partition 11, and is provided with a cam-shaped forward end 48 which extends adjacent the crank 21 of shaft 20. The partition 11 is slotted, as indicated at 49, and through this slot extends the angular end portion 50 of a second push rod 51, which is connected to the lever 45.

This angular end portion 50 normally lies rearwardly of the bottom ends of bottles disposed in alinement with the door opening 16, with the result that when this lever is moved forwardly the cam 48 acts upon the crank 21 to release the crank 19 from the doors so that they may open outwardly and the push rod 51 then engages the bottle alined with the door and shifts it forwardly through the opening a sufficient distance to enable it to be grasped.

The doors 16 move to their closed position through the action of suitable springs so that when the lever 45 again moves rearwardly they will be positioned to be locked by the locking mechanism formed by the shaft 20 and its cranks.

A spring 52 is employed to constantly urge the lever 42 rearwardly, and since lever 42 may not move rearwardly without an accompanying rearward movement of lever 45, this rearward movement will take place just as soon as lever 42 is released.

A coin inserted through the coin slot 35 after passing through the tube 36 will come to rest in slot 33 but may not pass therethrough, due to the fact that this slot in its normal position overlies the support 25. After the coin has been positioned in this slot, if the lever 42 is moved forwardly, there will be a primary movement of the auxiliary control rod 30. This movement brings the end of the prod against the coin, forcing the coin into engagement with the forward wall of the slide and from this time forward the control bar 29 will move with the lever and auxiliary control bar. The release and dis-

charge operations having been completed when the lever is released, the spring 52 immediately moves it rearwardly. The initial rearward movement being unaccompanied by any movement of the control bar 29 releases the prod 32 from the coin permitting the same to fall through the slot and into the receptacle 53 provided therefor.

The prod 32 has a small forward end and is curved upwardly and rearwardly in cam formation so that if a perforated check of the type used in some vending machines is inserted in lieu of the coin required, this prod will pass through the hole of the check and by continued forward movement of the bar 30 will lift the check from the slot and permit uninterrupted forward movement of the auxiliary bar without an accompanying movement of the control bar 29. This check will be discharged as the lever is moved rearwardly into the compartment 53.

The support 26 has associated therewith a pair of guides 54 directing a change bar 55 in its movement. This change bar is pivoted at 56 to the lever 45 to be shifted thereby. At its forward end it is formed with a change ejection prod 57 which is adapted to extend beneath the lower end of a change tube 58 as the change bar 55 is moved forwardly and discharged therefrom into the chute 59, the change representing the amount to be returned to the purchaser when the empty bottle is returned to the compartment C.

Adjacent the lower end of the change chute is arranged a stop mechanism, comprising a lever 60 having upon the head thereof spaced arms 61 adapted to alternately extend into the chute at spaced points. The lowermost arm 61 is normally extended into the chute preventing discharge of the coin therefrom, but when the lower end of the lever is moved rearwardly the upper arm extends into the chute preventing movement of coins above the lowermost coin and permitting this lowermost coin to discharge into a cup 62 disposed upon the exterior of the casing.

To the lower end of this lever a link 63 is connected. The link 63 is also connected to one arm 64 of a bell crank lever which is pivoted to the support 26. The second arm 65 of this lever is connected through a link 66 with one arm 67 of a further bell crank which extends transversely with respect to the compartments B and C and through the partition 12 into the compartment C and beneath the opening 68 through which an empty bottle may be inserted into this compartment. Suitable guides 69 direct the in-coming bottle to the second arm 68*a* of the bell crank lever so that the bottle in its entry into the compartment depresses this end of the lever, thereby elevating the link 66 and through link 63 moving the lower end of the lever 60 rearwardly to permit the discharge of a coin.

A spring 70 serves to normally maintain the arms 68*a* elevated and properly positioned to receive the bottles. These arms also cushion the fall of the bottle to prevent breakage either of the inserted bottle or of previously inserted bottles lying therebelow.

It will be obvious that by properly proportioning the coin slot 35 and the change making mechanism, any desired cost price to the user after a bottle has been returned may be obtained. It will also be obvious that the structure illustrated while providing a preferred embodiment, is capable of a certain range of change and modification without materially departing from the spirit of the invention, and I therefore do not limit myself to such structure except as hereinafter claimed.

I claim:

1. In a vending apparatus, a casing having a full-bottle compartment and an empty bottle compartment, a support, a longitudinally shiftable operating bar slidable upon the support and having a check receiving slot, an auxiliary operating bar slidable upon the first-named operating bar toward and away from the slot, an operating lever for said auxiliary bar, a tongue carried by said auxiliary bar and adapted at its extremity to engage with a check disposed in said slot when the auxiliary bar has been moved a predetermined distance whereby said operating bar will be shifted with the auxiliary bar upon further movement thereof and said tongue frictionally maintains the coin in position within the slot of the operating bar, means adapted to be operated to deliver a bottle from said full-bottle compartment, a pivotally mounted lever pivotally connected to said first bar, means connecting the delivering means to said last lever at a point between the pivots of the latter, a coin tube, a coin receptacle, a member extending from the tube to the receptacle, means adapted to be operated by said last lever and adapted when operated to deliver a coin from the tube to said member, coin arresting means normally preventing the passage of the coin from said member to the receptacle and adapted to be operated to free the coin for passage into the receptacle, and means for operating said coin arresting means and adapted to be operated by a bottle subsequent to its insertion in the empty bottle compartment.

2. A machine of the character set forth having a full-bottle compartment and an empty-bottle compartment, means adapted to deliver bottles successively from said first compartment, coin controlled means for operating said first means, a coin tube, a coin receptacle, a chute extending from the tube to the receptacle, means adapted to be operated by and during the operation of said first means for delivering coins from the tube to the chute, a stop member associated

with the chute and adapted when operated to permit a coin to pass from the chute to the receptacle, a bell crank lever pivotally mounted within the empty-bottle compartment and adapted to be engaged and rocked by a bottle inserted in said compartment, said lever being adapted to be engaged by the bottle after the complete insertion of the bottle and during its movement to a position of rest within the compartment, and means connecting said lever to the stop member to permit the rocking of the lever to operate the stop member.

3. In a vending apparatus, a casing having a full-bottle compartment and an empty bottle compartment, means adapted to be operated to deliver a bottle from said first compartment, a slidably mounted bar provided with a longitudinal slot and a coin receiving slot, a second bar slidable with respect to said first bar and provided with a longitudinal slot registering with and shorter than the longitudinal slot of said first bar, a tongue carried by said second bar and adapted to engage with a coin disposed in the coin slot when said second bar has been moved a predetermined distance whereby said first bar will be shifted with said second bar upon further movement thereof, a pivoted operating lever for said first and second bars and passing through the longitudinal slots thereof, a pivotally mounted lever pivotally connected to said first bar, means connecting said bottle delivery means to said last lever, a coin tube, a coin receptacle, a member extending from the tube to the receptacle, means adapted to be operated by said last lever and adapted when operated to deliver a coin from the tube to said member, coin arresting means normally preventing the passage of the coin from said member to the receptacle and adapted to be operated to free the coin for passage into the receptacle, and means for operating said coin arresting means and adapted to be operated by a bottle subsequent to its insertion in the empty bottle compartment.

4. A machine of the character set forth having a full-bottle compartment and an empty-bottle compartment, means adapted to deliver bottles successively from said first compartment, coin controlled means for operating said first means, a coin tube, a coin receptacle, a member extending from the tube to the receptacle, means adapted to be operated by and during the operation of said first means for delivering coins from the tube to said member, coin arresting means normally preventing the passage of a coin from said member to the receptacle and adapted to be operated to free the coin for passage into the receptacle, and means for operating said coin arresting means and adapted to be operated by a bottle subsequent to its insertion in the empty-bottle compartment.

In testimony whereof I hereunto affix my signature.

JOHN F. FITCH.