US 20030144711A1

(19) United States

(12) Patent Application Publication

(10) Pub. No.: US 2003/0144711 A1

(43) Pub. Date: Jul. 31, 2003

Pless et al.

(54) SYSTEMS AND METHODS FOR INTERACTING WITH AN IMPLANTABLE MEDICAL DEVICE

(75) Inventors: **Benjamin D. Pless**, Atherton, CA (US); **David R. Fischell**, Fair Haven, NJ (US); **Barbara Gibb**, Palo Alto, CA (US); **Lisa Guzzo**, Menlo Park, CA (US); **Adrian R. M. Upton**, Dundas (CA)

Correspondence Address:
NEUROPACE, INC.
1375 SHOREBIRD WAY
MOUNTAIN VIEW, CA 94043 (US)

(73) Assignee: **NeuroPace, Inc.**, Sunnyvale, CA (US)

(21) Appl. No.: **10/060,045**

(22) Filed: **Jan. 29, 2002**

Publication Classification

(51) **Int. Cl.**[7] **A61N 1/08**

(52) **U.S. Cl.** **607/60**

(57) **ABSTRACT**

An interactive implantable medical device system includes an implantable medical device and a network-enabled external device capable of bi-directional communication and interaction with the implantable medical device. The external device is programmed to interact with other similarly-enabled devices. The system facilitates improved patient care by eliminating unnecessary geographic limitations on implantable medical device interrogation and programming, and by allowing patients, physicians, and other users to access medical records, history, and information and to receive status and care-related alerts and messages anywhere there is access to a communications network.

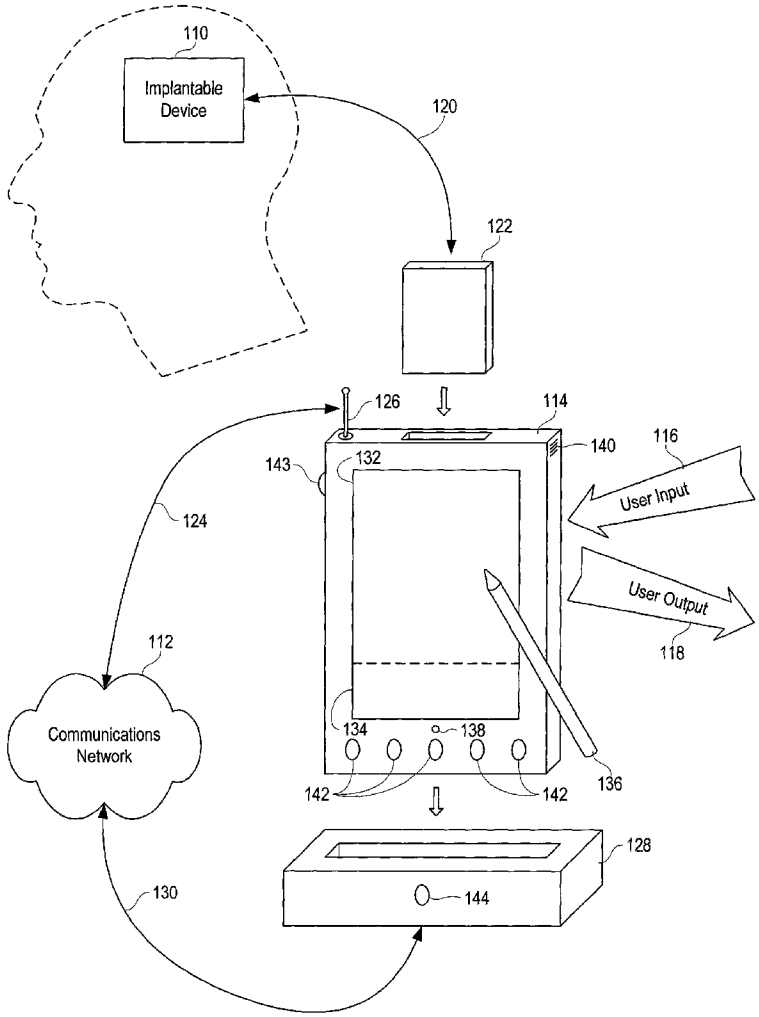

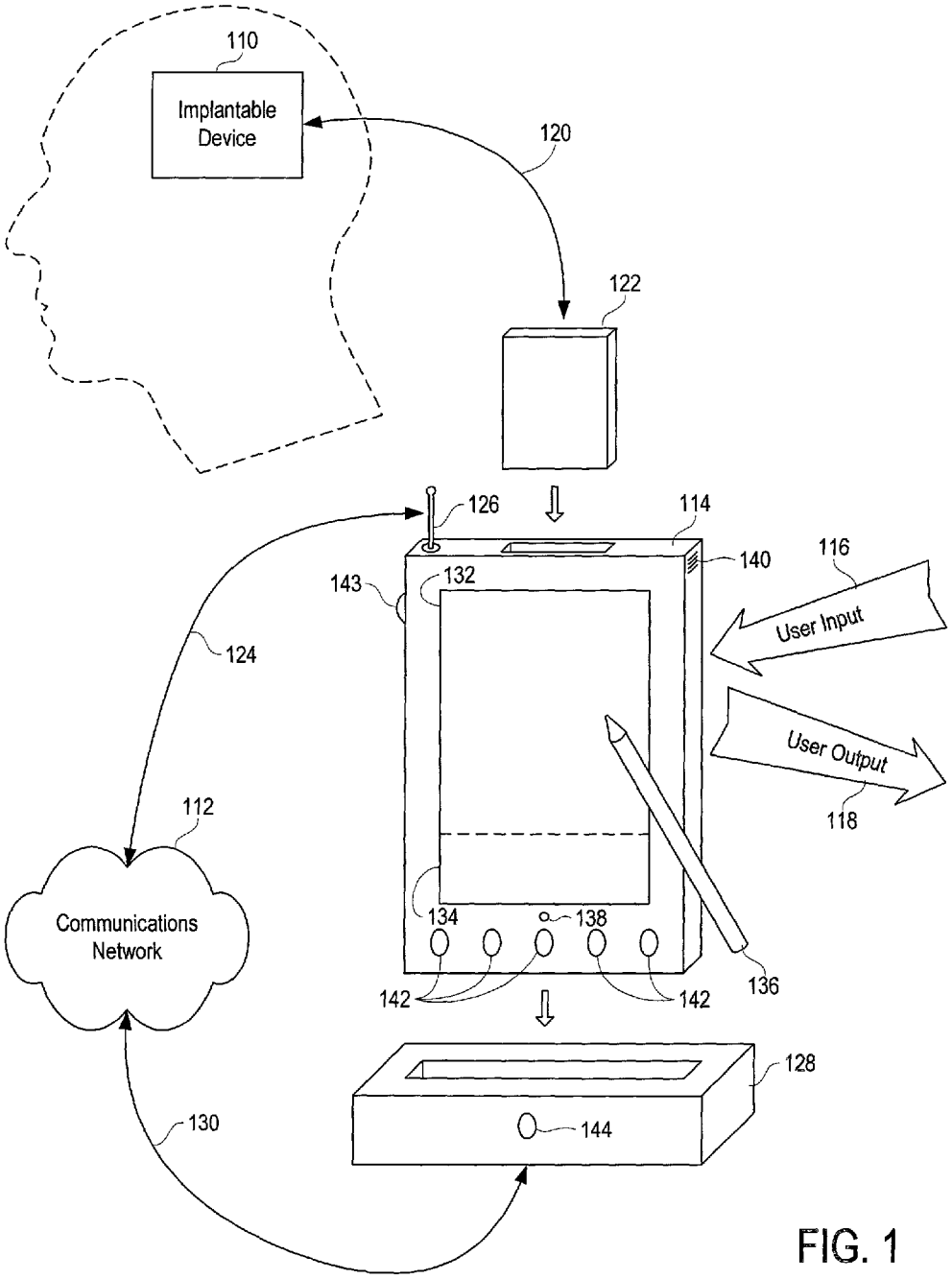
110
Implantable Device
120
122
126
114
140
116
143
132
User Input
124
User Output
118
112
Communications Network
134
138
136
142
142
128
130
144

FIG. 1

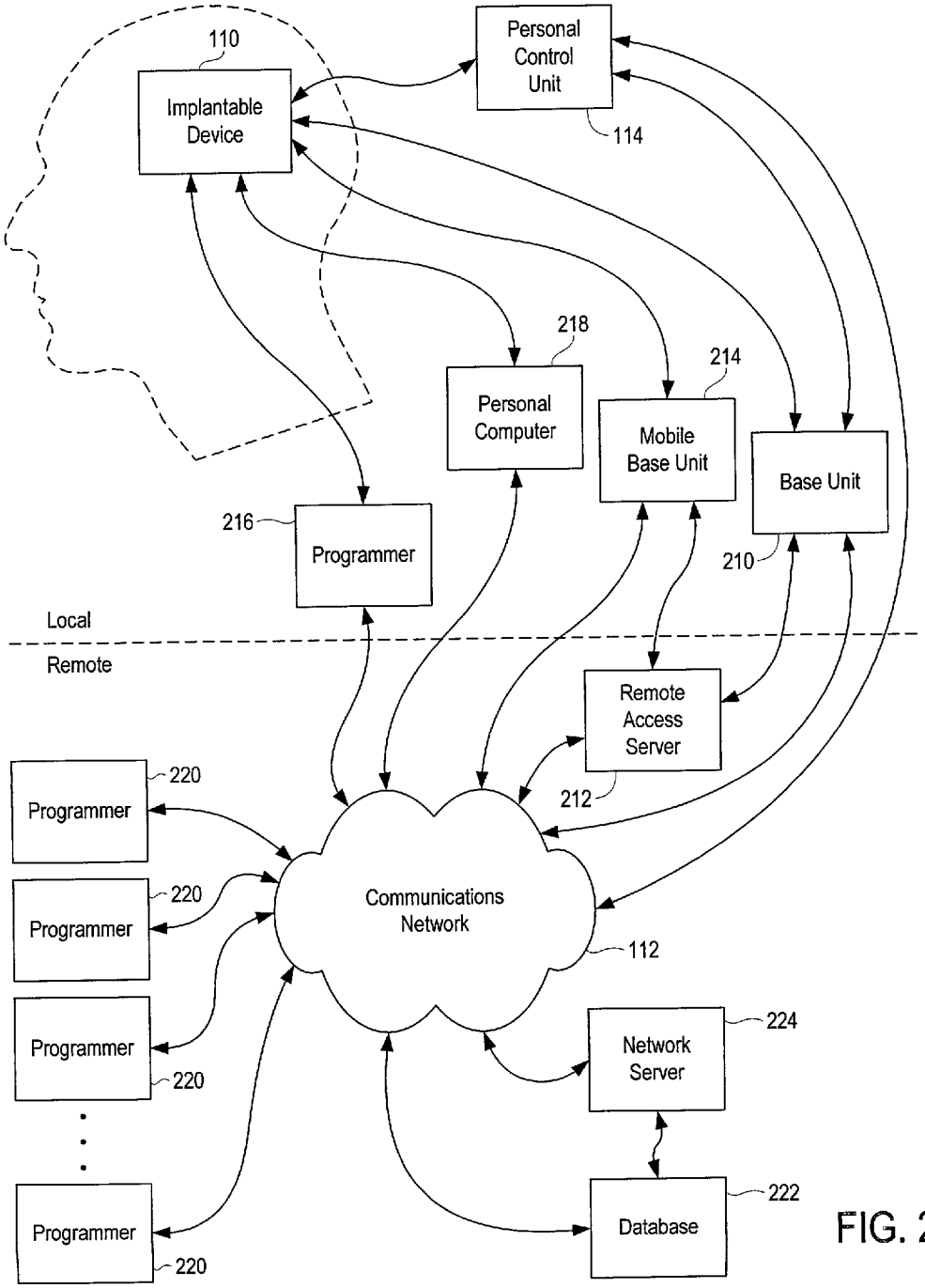
110
Implantable Device
Personal Control Unit
114
218
Personal Computer
214
Mobile Base Unit
Base Unit
216
Programmer
210
Local
Remote
Remote Access Server
212
220
Programmer
220
Programmer
Programmer
220
Programmer
220
Communications Network
112
224
Network Server
222
Database

FIG. 2

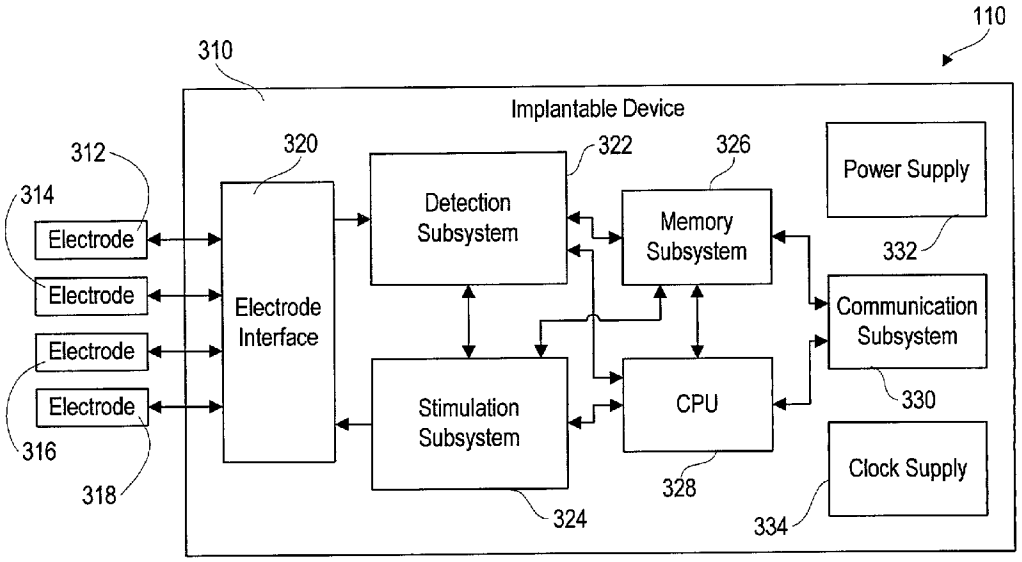
110
310
Implantable Device
312
314
Electrode
Electrode
Electrode
Electrode
316
318
320
Electrode Interface
322
Detection Subsystem
326
Memory Subsystem
Power Supply
332
Communication Subsystem
330
Stimulation Subsystem
324
CPU
328
Clock Supply
334

FIG. 3

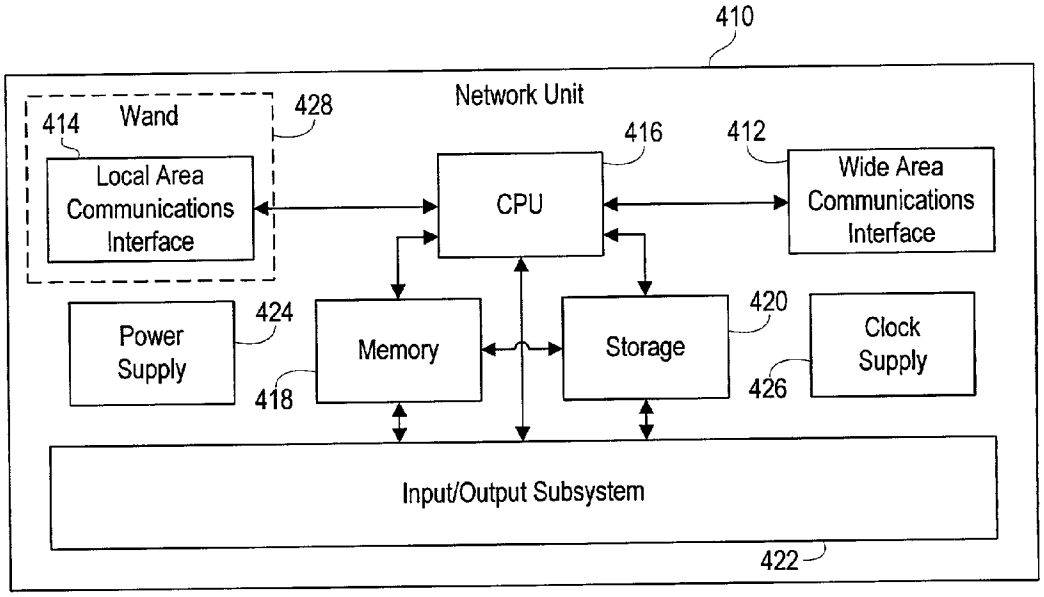
410
Network Unit
414
Wand
428
Local Area Communications Interface
416
CPU
412
Wide Area Communications Interface
Power Supply
424
Memory
418
Storage
420
Clock Supply
426
Input/Output Subsystem
422

FIG. 4

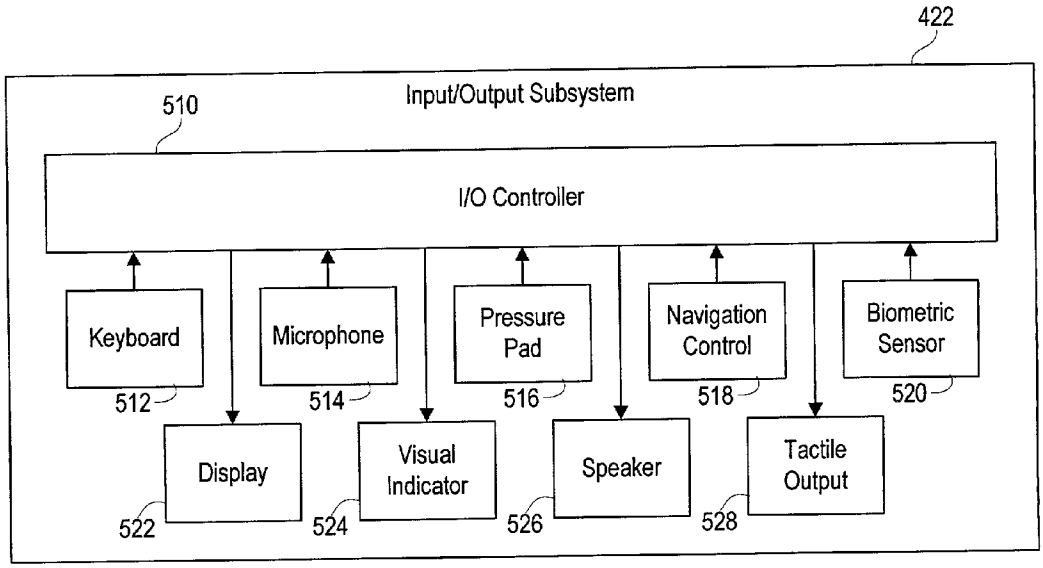
422
Input/Output Subsystem
510
I/O Controller
Keyboard
512
Microphone
514
Pressure Pad
516
Navigation Control
518
Biometric Sensor
520
Display
522
Visual Indicator
524
Speaker
526
Tactile Output
528

FIG. 5

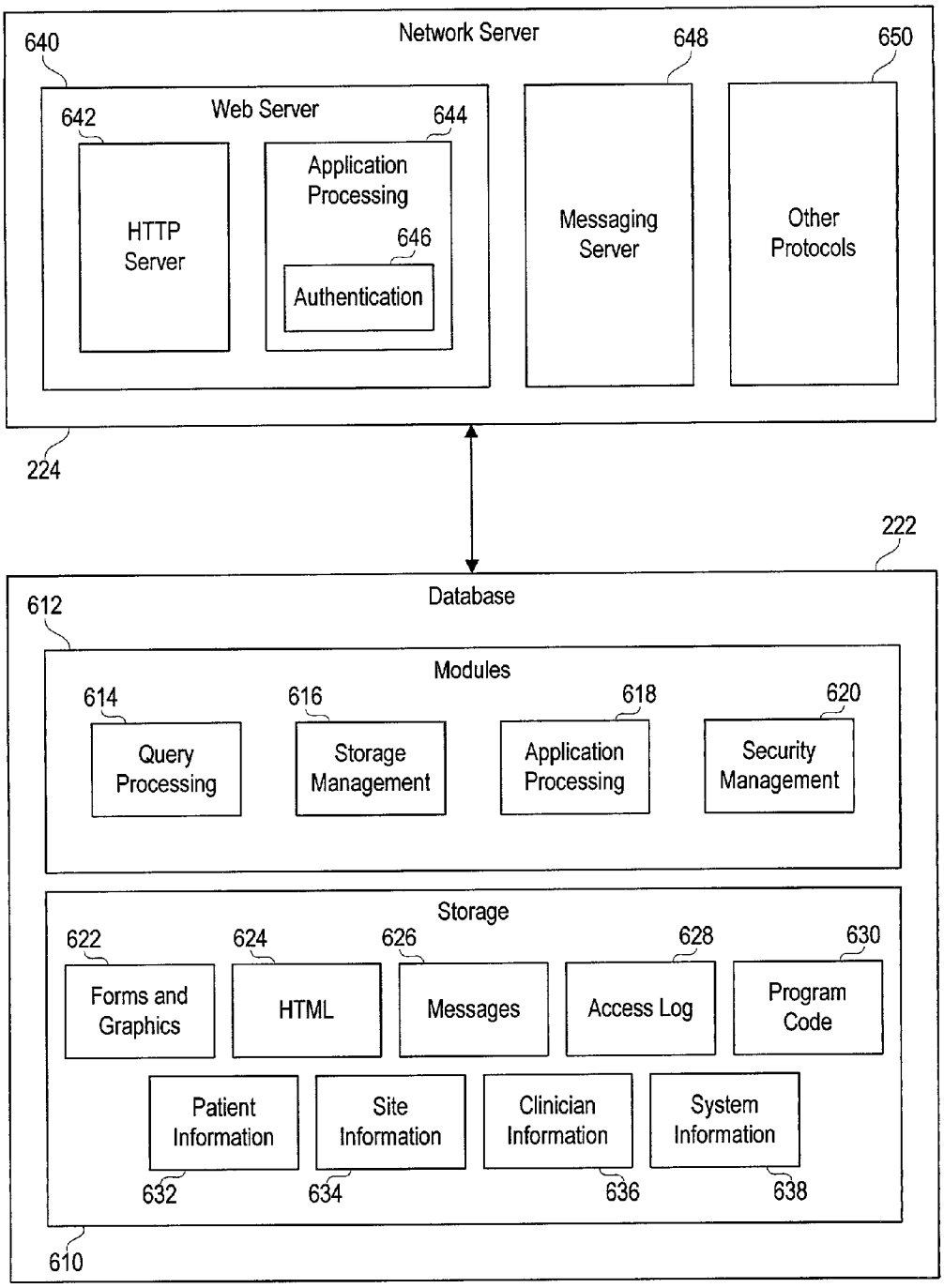
Network Server
640
648
650
Web Server
642
644
HTTP Server
Application Processing
646
Authentication
Messaging Server
Other Protocols
224
222
Database
612
Modules
614
616
618
620
Query Processing
Storage Management
Application Processing
Security Management
Storage
622
624
626
628
630
Forms and Graphics
HTML
Messages
Access Log
Program Code
Patient Information
Site Information
Clinician Information
System Information
632
634
636
638
610

FIG. 6

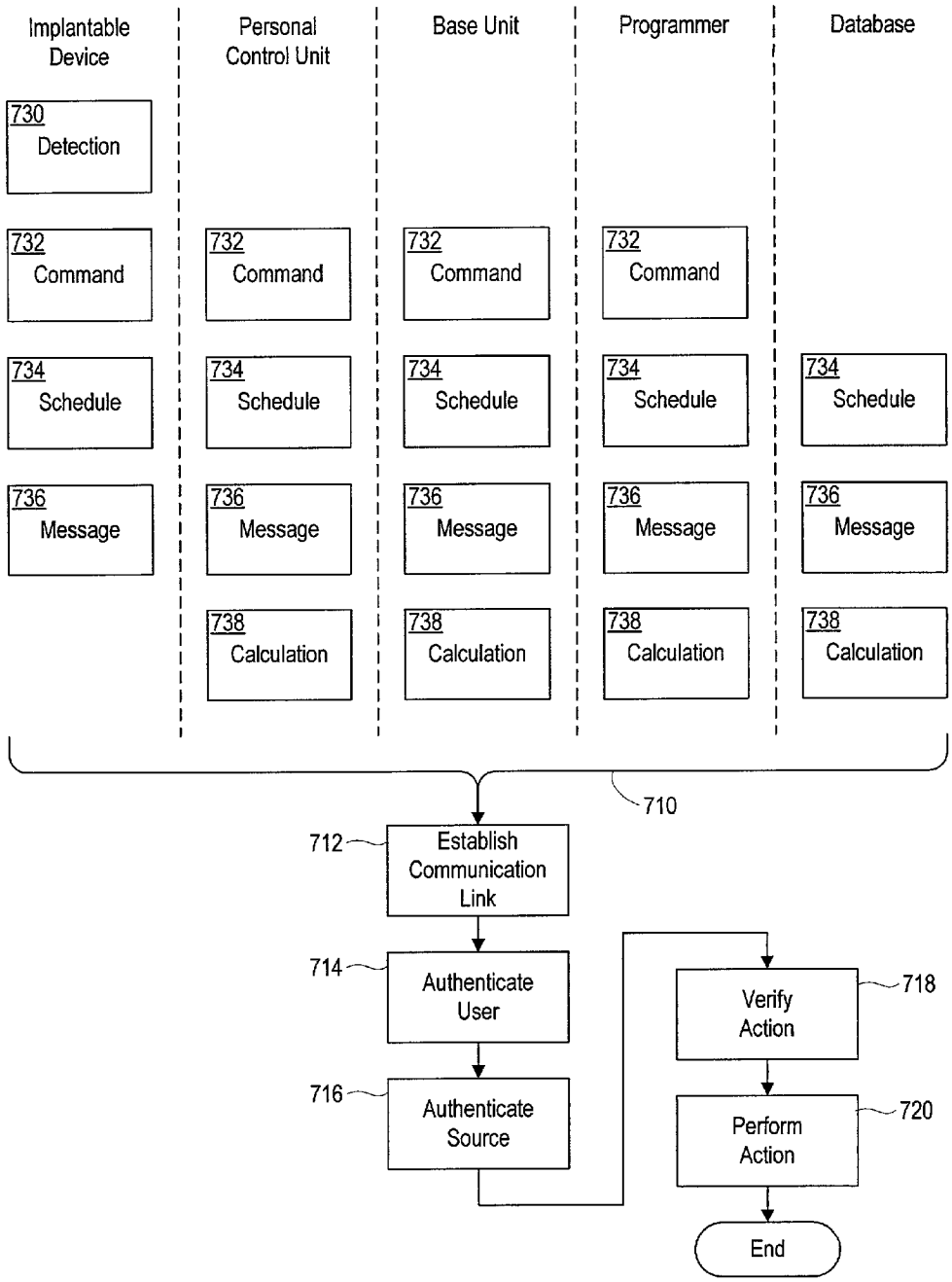
Implantable Device
Personal Control Unit
Base Unit
Programmer
Database
730 Detection
732 Command
734 Schedule
736 Message
738 Calculation
710
712 Establish Communication Link
714 Authenticate User
716 Authenticate Source
718 Verify Action
720 Perform Action
End

FIG. 7

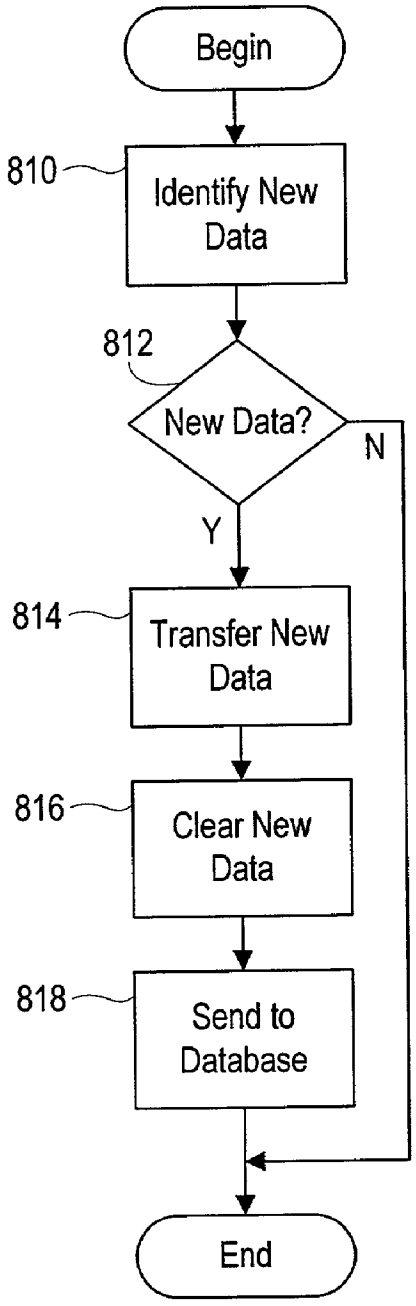
Begin
810
Identify New Data
812
New Data?
N
Y
814
Transfer New Data
816
Clear New Data
818
Send to Database
End

FIG. 8

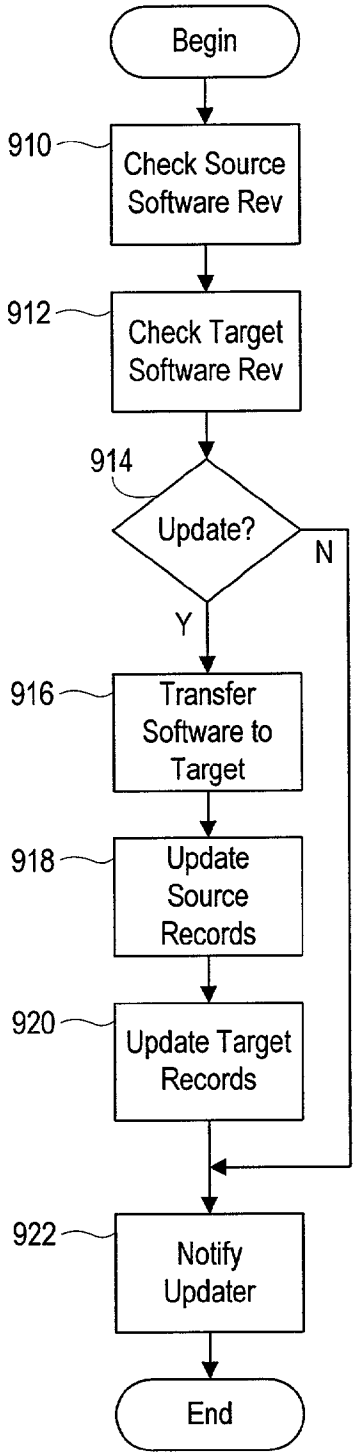
Begin
910
Check Source Software Rev
912
Check Target Software Rev
914
Update?
N
Y
916
Transfer Software to Target
918
Update Source Records
920
Update Target Records
922
Notify Updater
End

FIG. 9

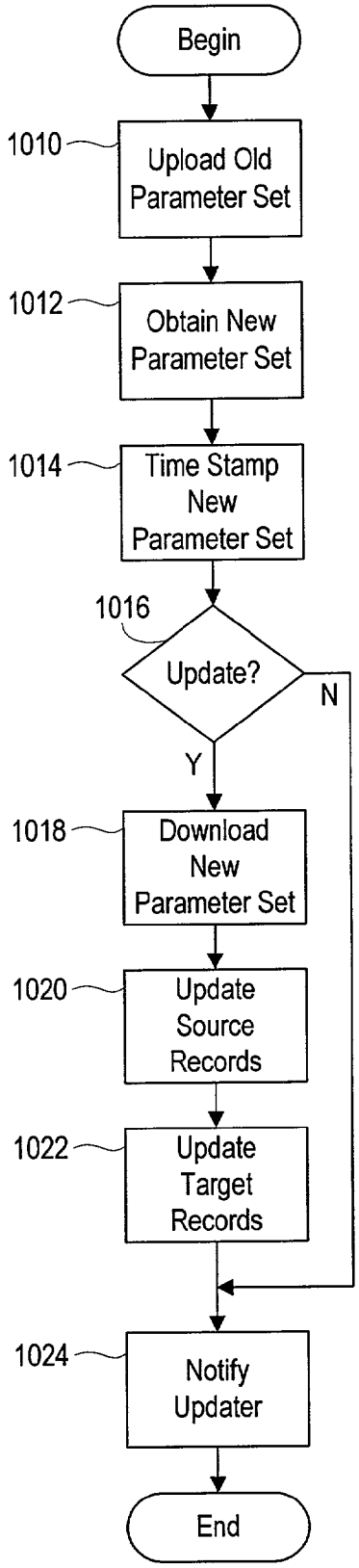
Begin
1010
Upload Old Parameter Set
1012
Obtain New Parameter Set
1014
Time Stamp New Parameter Set
1016
Update?
N
Y
1018
Download New Parameter Set
1020
Update Source Records
1022
Update Target Records
1024
Notify Updater
End

FIG. 10

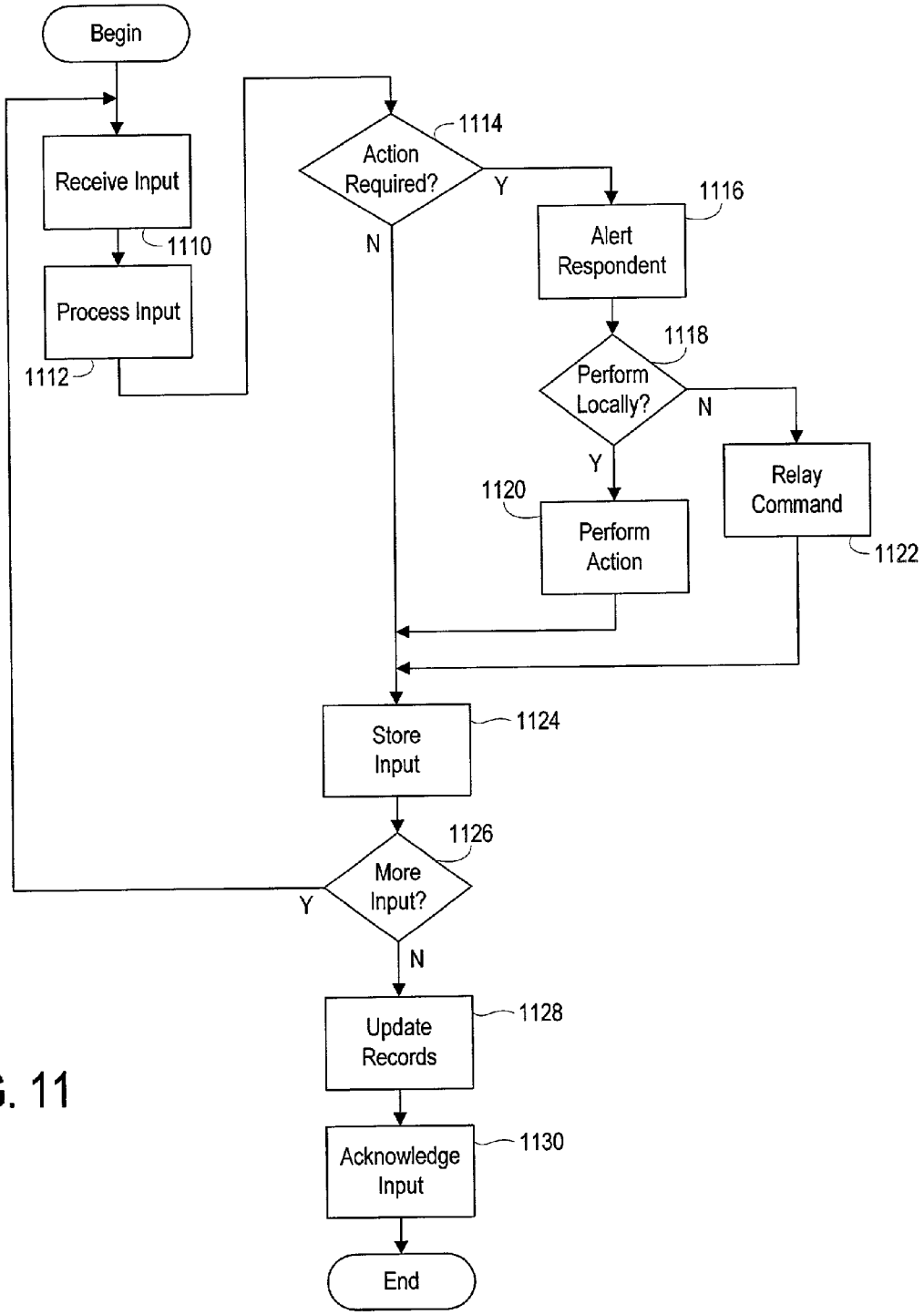
Begin
Receive Input
1110
Process Input
1112
Action Required?
1114
Y
N
Alert Respondent
1116
Perform Locally?
1118
N
Y
Relay Command
1122
1120
Perform Action
Store Input
1124
More Input?
1126
Y
N
Update Records
1128
Acknowledge Input
1130
End

FIG. 11

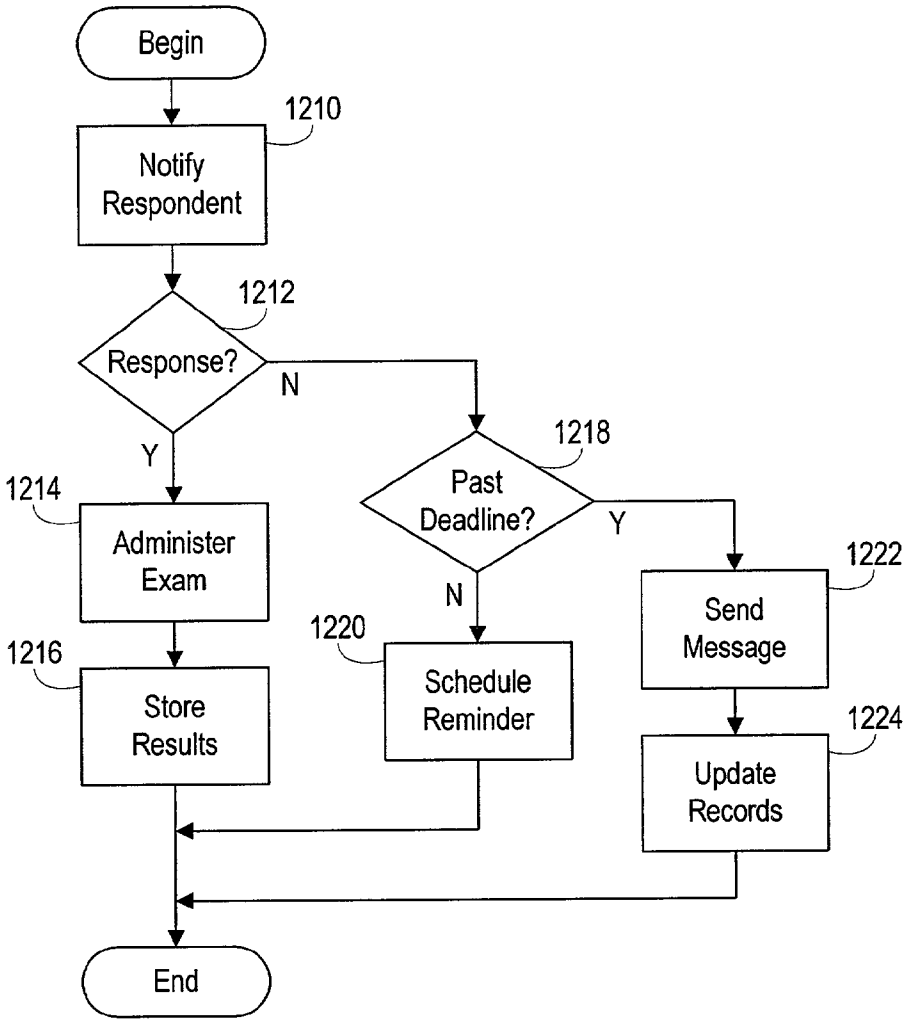
Begin
1210
Notify Respondent
1212
Response?
N
Y
1214
Administer Exam
1216
Store Results
1218
Past Deadline?
Y
N
1220
Schedule Reminder
1222
Send Message
1224
Update Records
End

FIG. 12

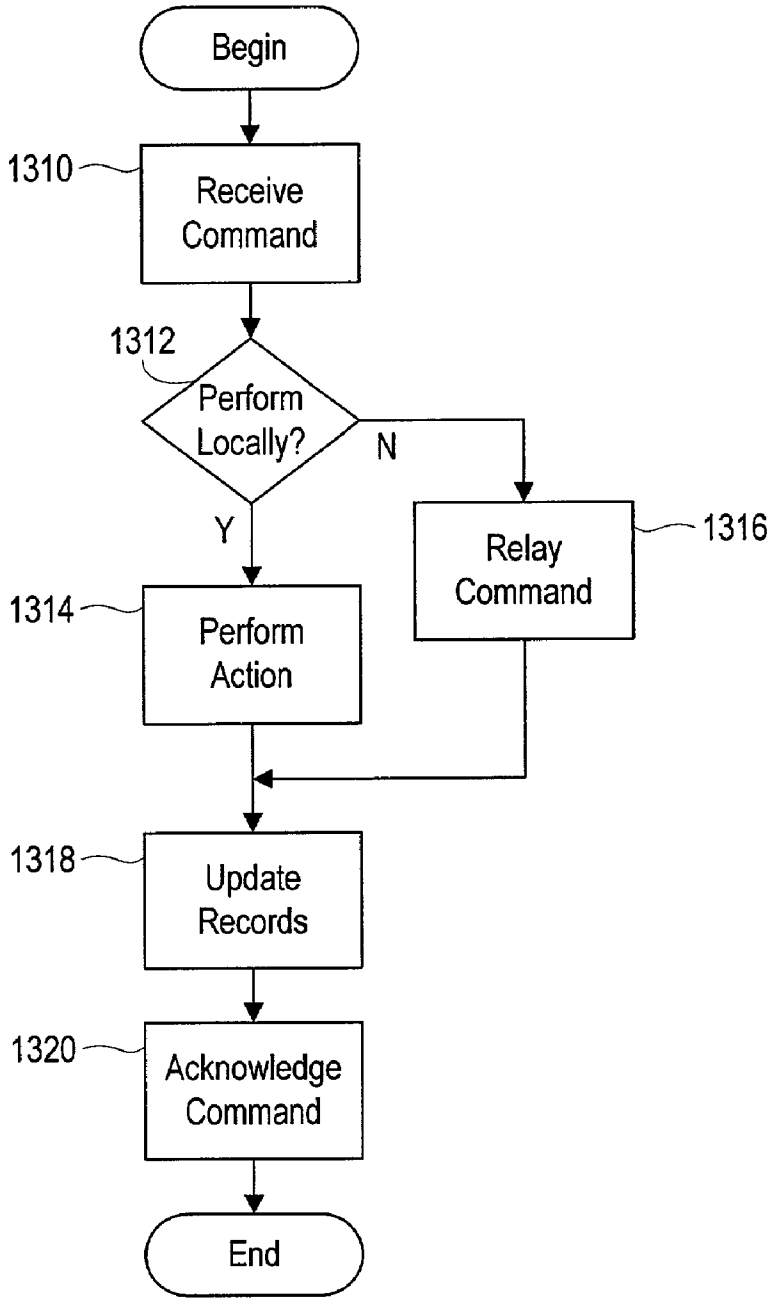
Begin
1310
Receive Command
1312
Perform Locally?
N
Y
Relay Command
1316
1314
Perform Action
1318
Update Records
1320
Acknowledge Command
End

FIG. 13

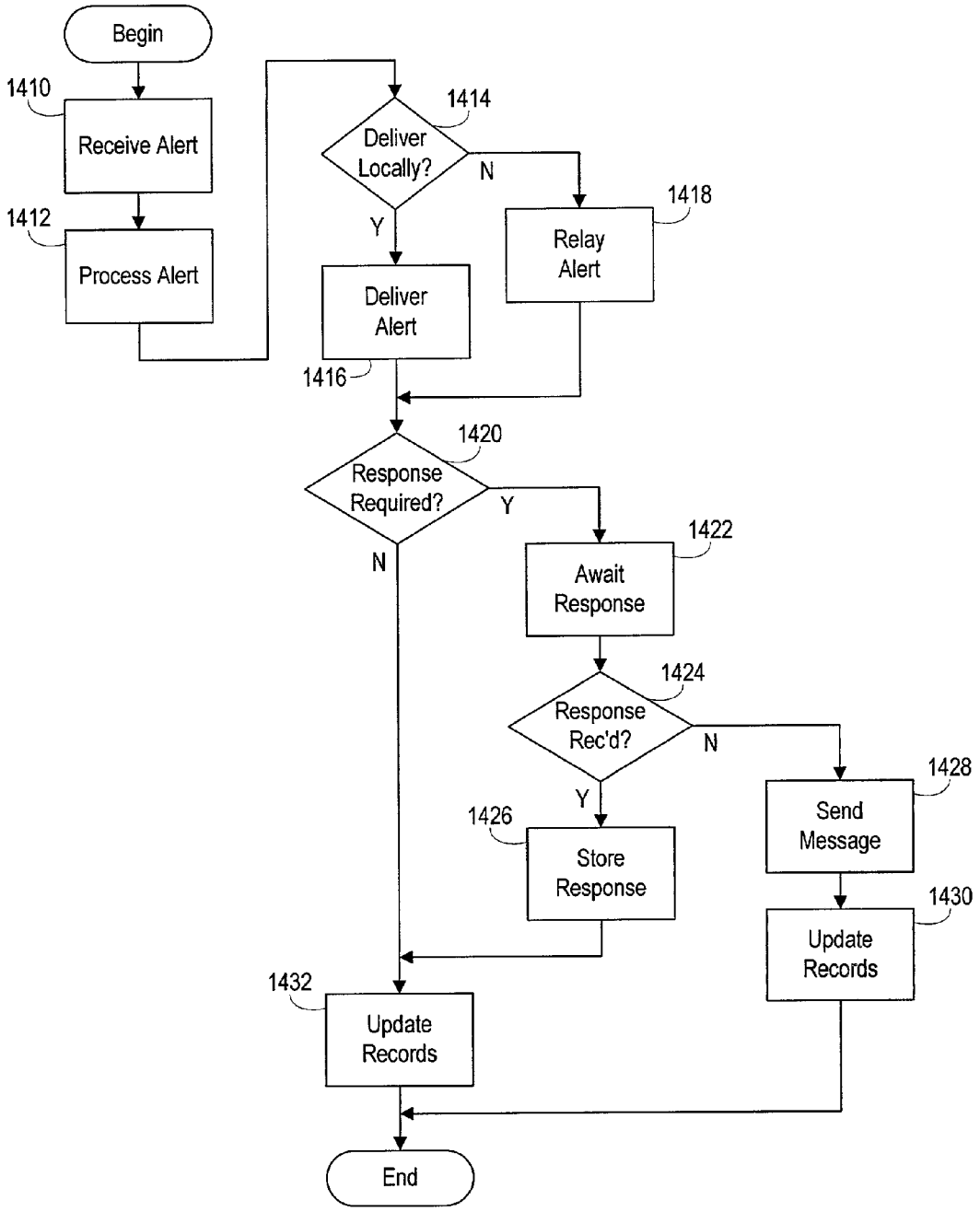
Begin
1410
Receive Alert
1412
Process Alert
1414
Deliver Locally?
N
Y
1418
Relay Alert
Deliver Alert
1416
1420
Response Required?
Y
N
1422
Await Response
1424
Response Rec'd?
N
Y
1428
Send Message
1426
Store Response
1430
Update Records
1432
Update Records
End

FIG. 14

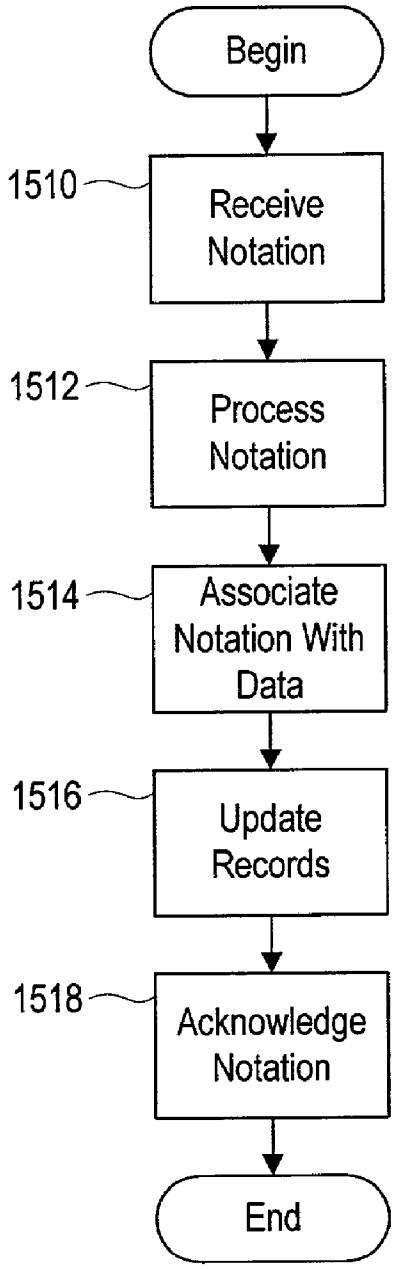
Begin
1510
Receive Notation
1512
Process Notation
1514
Associate Notation With Data
1516
Update Records
1518
Acknowledge Notation
End

FIG. 15

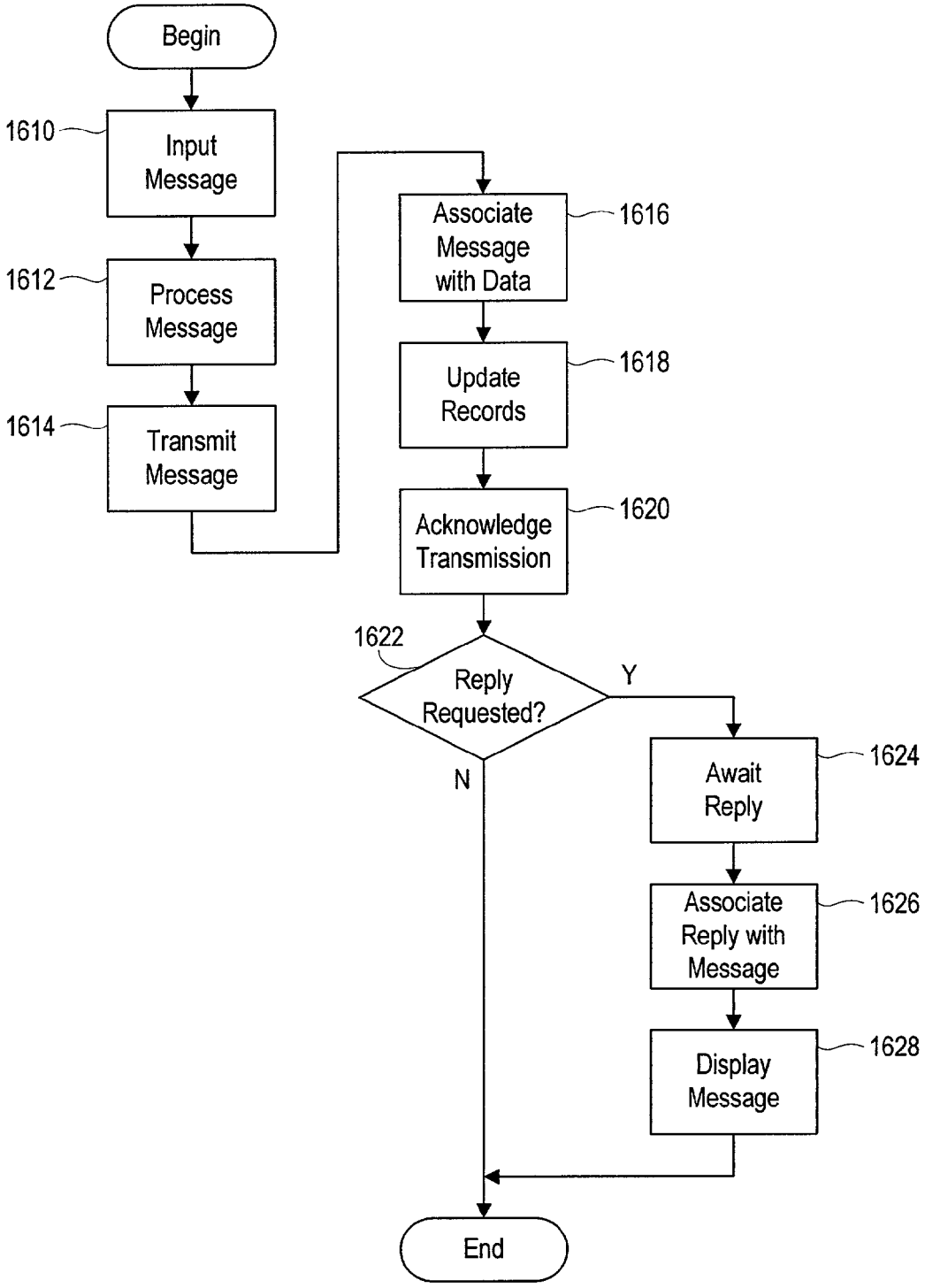
Begin
1610
Input Message
1612
Process Message
1614
Transmit Message
Associate Message with Data
1616
Update Records
1618
Acknowledge Transmission
1620
1622
Reply Requested?
Y
N
Await Reply
1624
Associate Reply with Message
1626
Display Message
1628
End

FIG. 16

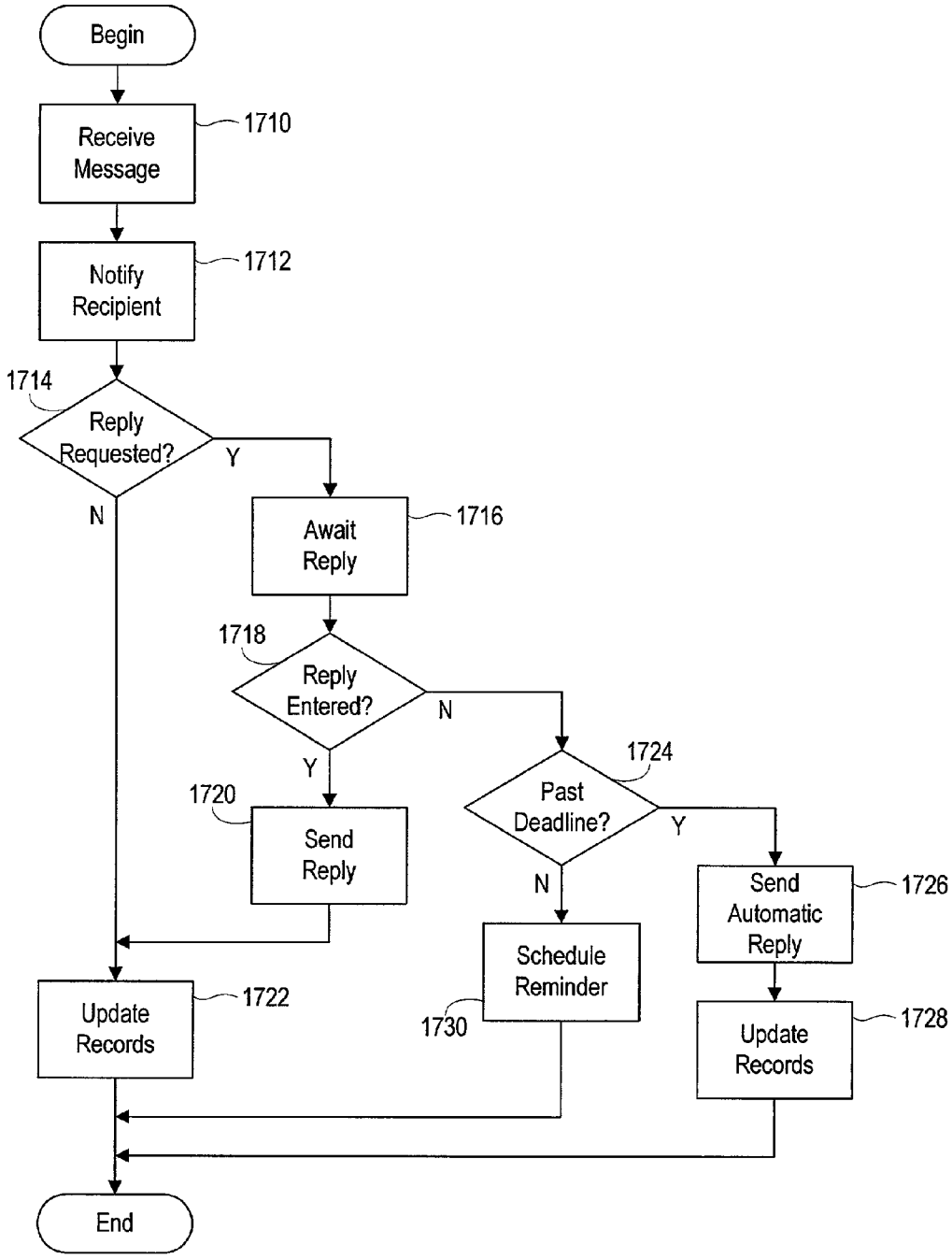
Begin
Receive Message
1710
Notify Recipient
1712
1714
Reply Requested?
Y
N
Await Reply
1716
1718
Reply Entered?
N
Y
1720
Send Reply
1724
Past Deadline?
Y
N
Send Automatic Reply
1726
Schedule Reminder
1730
Update Records
1722
Update Records
1728
End

FIG. 17

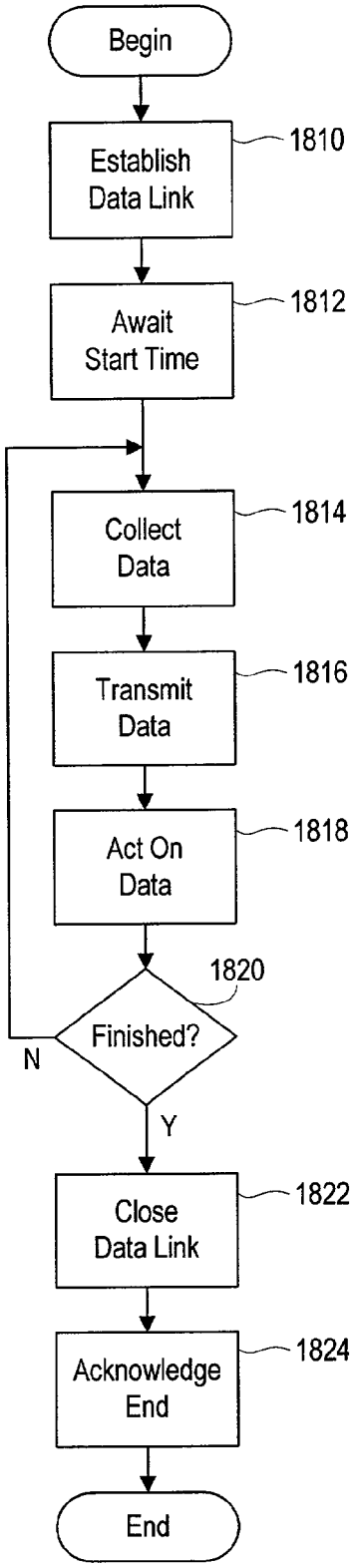
Begin
Establish Data Link
1810
Await Start Time
1812
Collect Data
1814
Transmit Data
1816
Act On Data
1818
1820
Finished?
N
Y
Close Data Link
1822
Acknowledge End
1824
End

FIG. 18

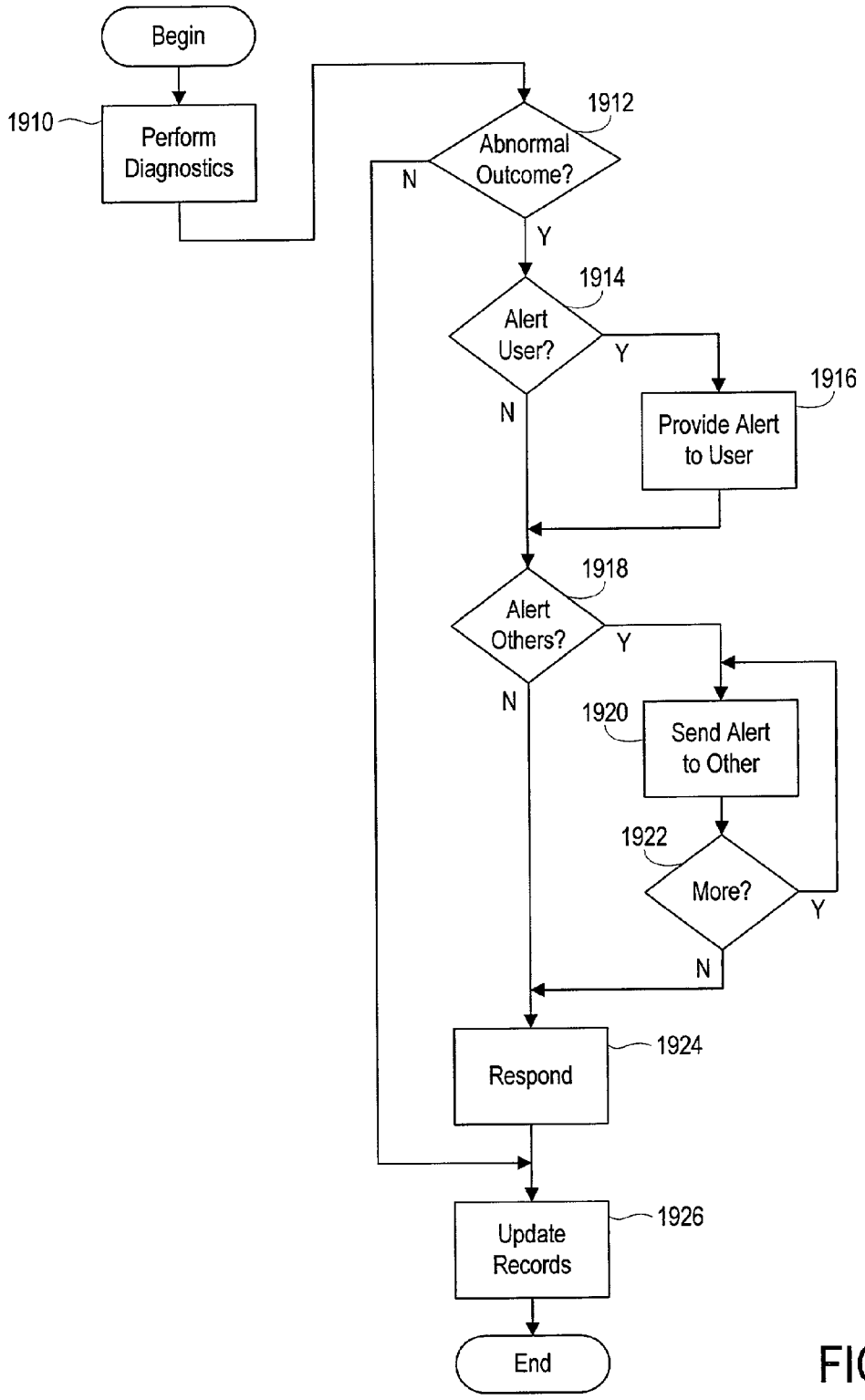
Begin
1910
Perform Diagnostics
1912
Abnormal Outcome?
N
Y
1914
Alert User?
Y
N
1916
Provide Alert to User
1918
Alert Others?
Y
N
1920
Send Alert to Other
1922
More?
Y
N
1924
Respond
1926
Update Records
End

FIG. 19

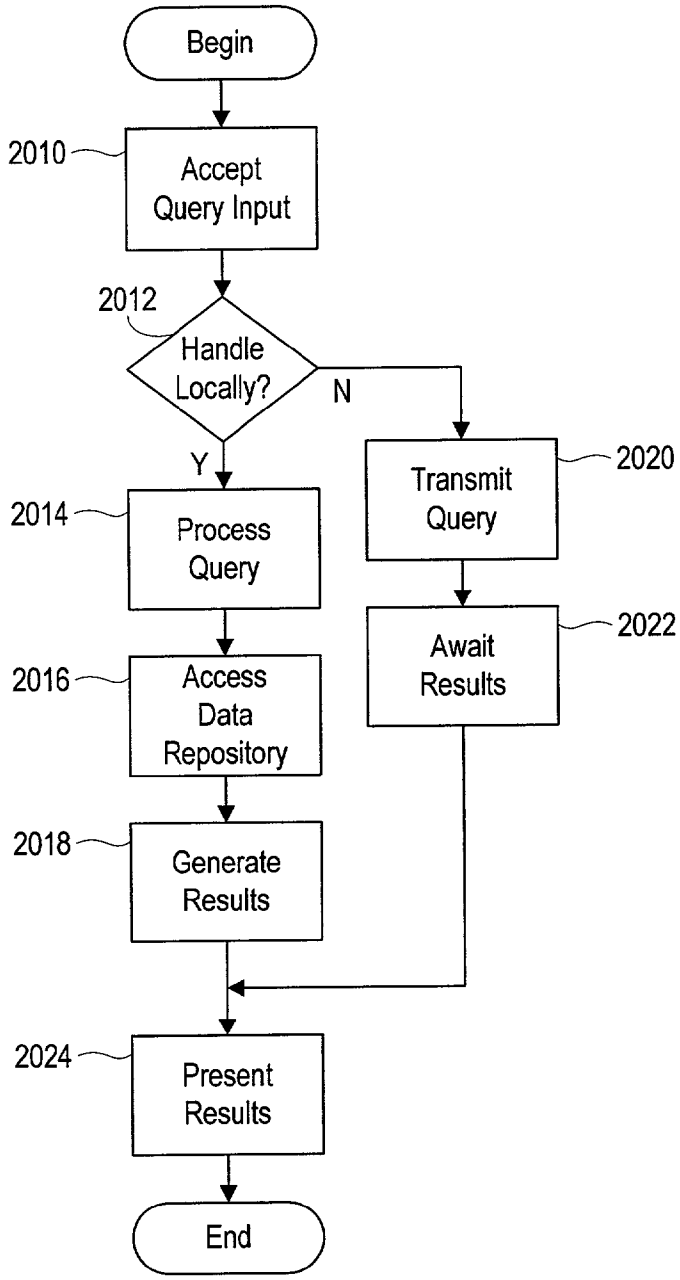
Begin
2010
Accept Query Input
2012
Handle Locally?
N
Y
2014
Process Query
2016
Access Data Repository
2018
Generate Results
2020
Transmit Query
2022
Await Results
2024
Present Results
End

FIG. 20

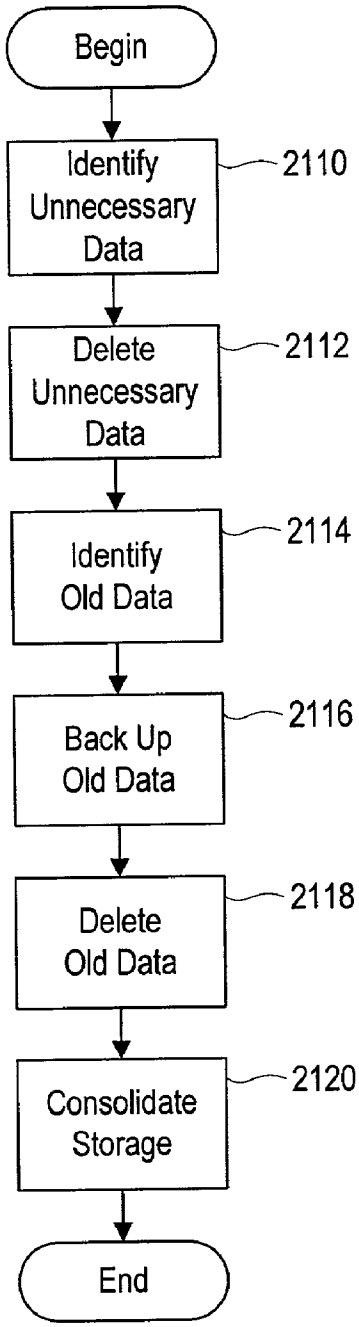
Begin
Identify Unnecessary Data
2110
Delete Unnecessary Data
2112
Identify Old Data
2114
Back Up Old Data
2116
Delete Old Data
2118
Consolidate Storage
2120
End

FIG. 21

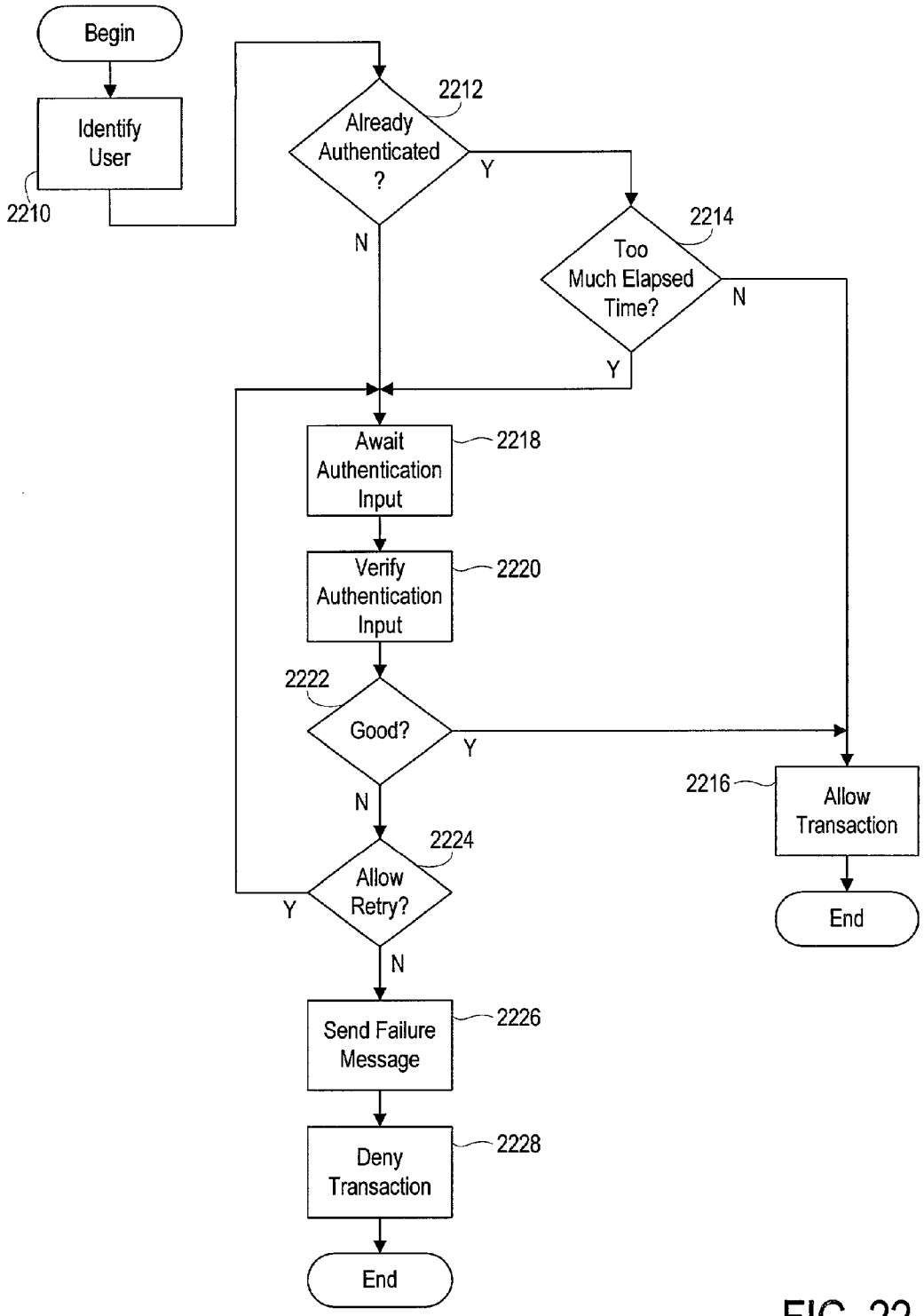
Begin
Identify User
2210
Already Authenticated ?
2212
Y
N
Too Much Elapsed Time?
2214
N
Y
Await Authentication Input
2218
Verify Authentication Input
2220
Good?
2222
Y
N
Allow Retry?
2224
Y
N
Allow Transaction
2216
End
Send Failure Message
2226
Deny Transaction
2228
End

FIG. 22

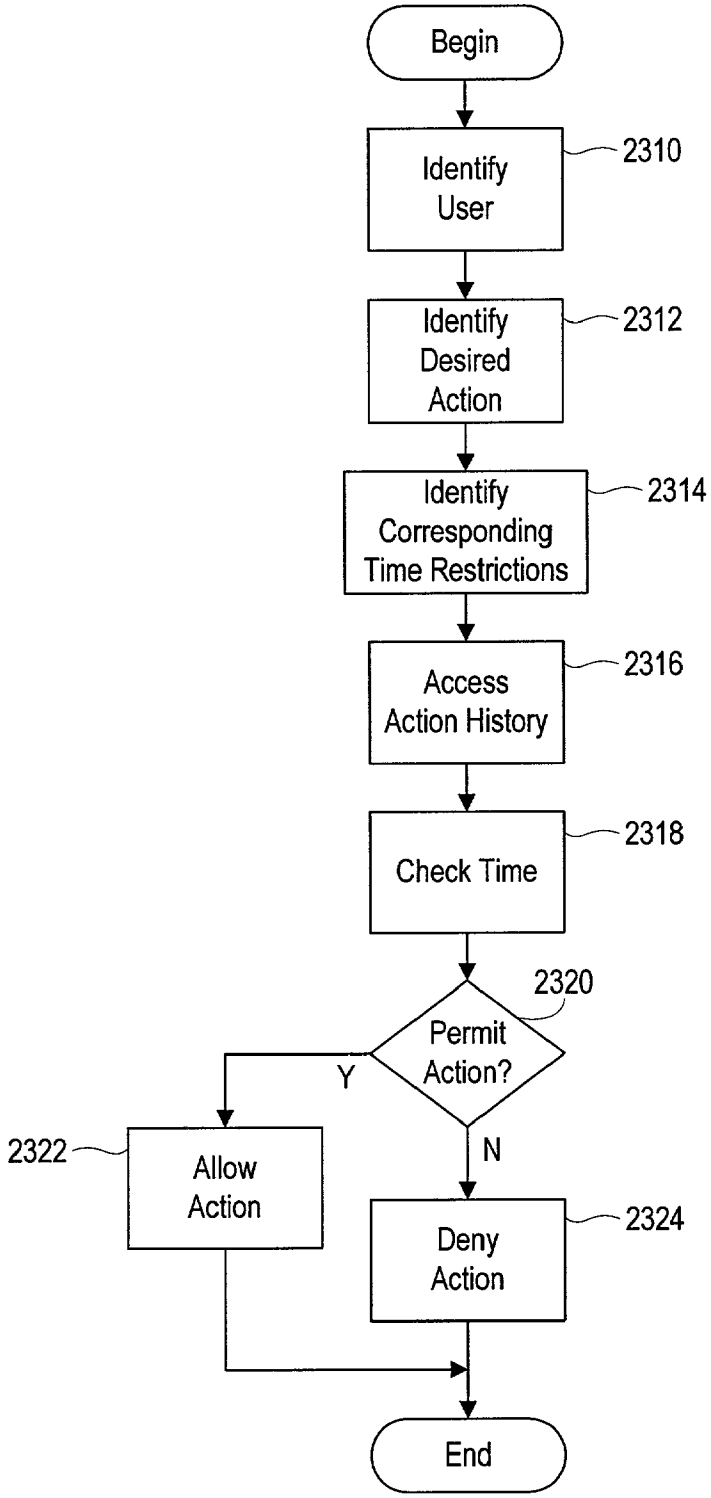
Begin
Identify User
2310
Identify Desired Action
2312
Identify Corresponding Time Restrictions
2314
Access Action History
2316
Check Time
2318
2320
Permit Action?
Y
N
2322
Allow Action
Deny Action
2324
End

FIG. 23

SYSTEMS AND METHODS FOR INTERACTING WITH AN IMPLANTABLE MEDICAL DEVICE

FIELD OF THE INVENTION

[0001] The invention relates to implantable medical device systems, and more particularly to implantable medical device systems having the ability to communicate with devices outside of a patient for programming, interrogation, data retrieval, and other purposes.

BACKGROUND OF THE INVENTION

[0002] Epilepsy, a neurological disorder characterized by the occurrence of seizures (specifically episodic impairment or loss of consciousness, abnormal motor phenomena, psychic or sensory disturbances, or the perturbation of the autonomic nervous system), is debilitating to a great number of people. It is believed that as many as two to four million Americans may suffer from various forms of epilepsy. Research has found that its prevalence may be even greater worldwide, particularly in less economically developed nations, suggesting that the worldwide figure for epilepsy sufferers may be in excess of one hundred million.

[0003] Because epilepsy is characterized by seizures, its sufferers are frequently limited in the kinds of activities they may participate in. Epilepsy can prevent people from driving, working, or otherwise participating in much of what society has to offer. Some epilepsy sufferers have serious seizures so frequently that they are effectively incapacitated.

[0004] Furthermore, epilepsy is often progressive and can be associated with degenerative disorders and conditions. Over time, epileptic seizures often become more frequent and more serious, and in particularly severe cases, are likely to lead to deterioration of other brain functions (including cognitive function) as well as physical impairments.

[0005] The current state of the art in treating neurological disorders, particularly epilepsy, typically involves drug therapy and surgery. The first approach is usually drug therapy.

[0006] A number of drugs are approved and available for treating epilepsy, such as sodium valproate, phenobarbital/primidone, ethosuximide, gabapentin, phenytoin, and carbamazepine, as well as a number of others. Unfortunately, those drugs typically have serious side effects, especially toxicity, and it is extremely important in most cases to maintain a precise therapeutic serum level to avoid breakthrough seizures (if the dosage is too low) or toxic effects (if the dosage is too high). The need for patient discipline is high, especially when a patient's drug regimen causes unpleasant side effects the patient may wish to avoid.

[0007] Moreover, while many patients respond well to drug therapy alone, a significant number (at least 20-30%) do not. For those patients, surgery is presently the best-established and most viable alternative course of treatment.

[0008] Currently practiced surgical approaches include radical surgical resection such as hemispherectomy, corticectomy, lobectomy and partial lobectomy, and less-radical lesionectomy, transection, and stereotactic ablation. Besides being less than fully successful, these surgical approaches generally have a high risk of complications, and can often result in damage to eloquent (i.e., functionally important) brain regions and the consequent long-term impairment of various cognitive and other neurological functions. Furthermore, for a variety of reasons, such surgical treatments are contraindicated in a substantial number of patients. And unfortunately, even after radical brain surgery, many epilepsy patients are still not seizure-free.

[0009] Electrical stimulation is an emerging therapy for treating epilepsy. However, currently approved and available electrical stimulation devices apply continuous electrical stimulation to neural tissue surrounding or near implanted electrodes, and do not perform any detection—they are not responsive to relevant neurological conditions.

[0010] The NeuroCybernetic Prosthesis (NCP) from Cyberonics, for example, applies continuous electrical stimulation to the patient's vagus nerve. This approach has been found to reduce seizures by about 50% in about 50% of patients. Unfortunately, a much greater reduction in the incidence of seizures is needed to provide clinical benefit. The Activa device from Medtronic is a pectorally implanted continuous deep brain stimulator intended primarily to treat Parkinson's disease. In operation, it supplies a continuous electrical pulse stream to a selected deep brain structure where an electrode has been implanted.

[0011] Continuous stimulation of deep brain structures for the treatment of epilepsy has not met with consistent success. To be effective in terminating seizures, it is believed that one effective site where stimulation should be performed is near the focus of the epileptogenic region. The focus is often in the neocortex, where continuous stimulation may cause significant neurological deficit with clinical symptoms including loss of speech, sensory disorders, or involuntary motion. Accordingly, research has been directed toward automatic responsive epilepsy treatment based on a detection of imminent seizure.

[0012] A typical epilepsy patient experiences episodic attacks or seizures, which are generally electrographically defined as periods of abnormal neurological activity. As is traditional in the art, such periods shall be referred to herein as "ictal."

[0013] Most prior work on the detection and responsive treatment of seizures via electrical stimulation has focused on analysis of electroencephalogram (EEG) and electrocorticogram (ECoG) waveforms. In general, EEG signals represent aggregate neuronal activity potentials detectable via electrodes applied to a patient's scalp. ECoG signals, deep-brain counterparts to EEG signals, are detectable via electrodes implanted on or under the dura mater, and usually within the patient's brain. Unless the context clearly and expressly indicates otherwise, the term "EEG" shall be used generically herein to refer to both EEG and ECoG signals.

[0014] As is well known, it has been suggested that it is possible to treat and terminate seizures by applying electrical stimulation to the brain. See, e.g., U.S. Pat. No. 6,016,449 to Fischell et al., and H. R. Wagner, et al., "Suppression of cortical epileptiform activity by generalized and localized ECoG desynchronization," Electroencephalogr. Clin. Neurophysiol. 1975; 39(5): 499-506. And as stated above, it is believed to be beneficial to perform this stimulation only when a seizure (or other undesired neurological event) is occurring or about to occur, as inappropriate stimulation may result in the initiation of seizures.

[0015] It is especially beneficial to be able to tailor the operation of a neurostimulator (i.e. a device, preferably implantable, that delivers responsive electrical stimulation therapy as described above) to the specific needs of the patient. Accordingly, many neurostimulators and other implantable medical devices available and in development (in particular cardiac devices, such as pacemakers and implantable cardioverter-defibrillators, or ICDs) are programmable to some extent. Typically, however, programming and interrogation are performed with an expensive custom piece of equipment kept by the patient's hospital or clinic. To the extent a handheld or portable programmer is available to a patient, it is generally a standalone unit provided with a limited number of features and functions to avoid undesirable interference with the implantable device's clinical objectives.

[0016] With traditional solutions, device interrogation and programming can generally only be accomplished locally, i.e. in close proximity to the device being interrogated or programmed. Programmers and handheld control devices are relatively commonplace, but generally are not very sophisticated. Handheld devices are generally restricted to controlling a relatively small number of device parameters. Even other types of programmers typically are not sophisticated enough to be tied into multiple other devices or to have any ability to update or examine a patient's comprehensive treatment history, especially if the patient has not used that programmer before. Interaction with implantable medical devices has traditionally been limited by geographical considerations in the past.

[0017] It will be appreciated that it is desirable to have improved flexibility in managing patient care by enabling remote interrogation, programming, and interaction with implanted medical devices.

[0018] Modern implantable medical devices, such as neurostimulators, pacemakers, and ICDs, are capable of not only monitoring patient condition and delivering therapy, but also can store detailed data and diagnostics relating to a patient's condition for later retrieval. Analysis of this data can improve patient care dramatically, and allow fine-tuning the performance of the implantable devices by programming them with new operational parameters. Interrogation of an implantable medical device allows data stored in the device to be retrieved by an external device (which, presumably, is better equipped to analyze the data in great detail). After analysis, reprogramming the device allows its performance to be optimized based on the interrogated data.

[0019] In addition to the clinical utility provided by flexible interrogation and programming capabilities as described above, it is also desirable to be able to provide additional communications features to keep patients involved, informed, and invested in their own care. Traditional implantable medical devices, even those using programmers or hand-held control devices, are not well suited for this. Long-term care of epilepsy and cardiac patients, among others, requires a serious commitment from not only medical and clinical personnel, but also from patients. As described above, anti-epileptic drugs often have unpleasant side effects, so patients taking them should be made to feel like they have the information and control they need to effectively manage their disease, or they may become complacent and non-compliant. The same is true for patients with implantable medical devices—there is a danger that patients will take their devices for granted unless they are sufficiently involved.

[0020] Finally, it should be recognized that several tasks involved in the long-term care and management of neurological and cardiac patients are either labor-intensive or require inconvenient periodic office (or hospital) visits, even when the patient is being managed very well. It would be desirable to provide a mechanism for remote welfare-checks on patients with implantable devices, to allow their progress to be checked and data analyzed without the need for frequent office visits. Such a capability would preferably allow the user to store logs and notes regarding his or her condition, and would also facilitate the remote administration of examinations or surveys, as desired by the patient's treating medical team or physician.

[0021] Several others have attempted to leverage modern communications capabilities in the context of an implantable medical device system.

[0022] Medtronic, Inc. has tested an implantable diagnostic monitor for use in treating high-risk cardiac patients. See D. Sherman, "High-Tech Heart Devices Deliver Data Over the Web," Reuters News Service (Aug. 8, 2001). However, the Medtronic devices used in the "Chronicle Study" appear to be monitors only and do not appear to provide therapy. It would be preferable to have a device that is not only a continuous monitor, but is also a closed-loop treatment system that can be programmed and optimized with information obtained via the monitoring function.

[0023] Medtronic also has available a programmable implantable pulse generator for treating neurological disorders, particularly tremor. The "Activa" device has several programmable settings, but is not enabled for diagnostic data storage and upload, and generally provides only continuous (or semi-continuous) pulse streams, not closed-loop therapy responsive to the detection of a relevant event. It is not adapted for remote control or administration.

[0024] Another company has developed a PDA-based system for monitoring patient status. See "MedSearch Technologies, Inc. Develops a Revolutionary Home-Care Wireless Technology Using PDAs—Personal Organizers—as Patient Monitors," Business Wire (Sep. 25, 2000). However, the MedSearch system uses disposable sensors, and does not appear to tie into an implantable device system. Although a system such as the one from MedSearch might provide some additional convenience in the form of reduced office visits, it is not directly involved in a closed-loop treatment system and hence would not facilitate comprehensive remote patient care and management, only monitoring.

[0025] St. Jude Medical, Inc. developed the Housecall trans-telephonic data link system for implantable cardiac care devices. This device enabled the transmission of stored data and diagnostics from the implantable device to a remote location. However, the apparatus was relatively cumbersome, and it took a relatively long time to complete a single session of data transmission, leading to patient non-compliance. Like the systems described above, the Housecall system was intended to provide a remote monitoring function only, and did not serve as part of a closed-loop treatment system providing remote patient care.

[0026] Cyberonics, Inc. markets an implantable device for treating epilepsy; it is now also being tested for treating

other disorders. The Cyberonics "NCP" (Neurocybemetic Prosthesis) is, in essence, an implantable pulse generator adapted, in this case, to apply electrical stimulation to the patient's vagus nerve. Like the Medtronic Activa, it applies a continuous or semi-continuous pulse stream, and only a few basic settings are programmable. It is not adapted to collect data or to provide responsive therapy, and no integrated system for network communications is available.

[0027] Clearly, an interactive implantable medical device system with enhanced network communications capabilities, geographic independence, and closed-loop treatment functionality would be desirable as it would greatly improve patient care and management for numerous diseases and disorders now treated with implantable devices that have only limited communications capabilities.

SUMMARY OF THE INVENTION

[0028] An interactive implantable medical device system according to the invention avoids the shortcomings of the systems described above by enabling great flexibility and control over patient management and care in a closed-loop treatment system centering around the implantable device.

[0029] More specifically, an interactive implantable medical device system according to the invention generally includes, in addition to the implantable medical device, at least one external device capable of bi-direction communication and interaction with the implantable medical device. Preferably, the external device, which takes the form of a handheld computing device, a base unit used in the patient's home, or a physician-operated programmer, is also enabled to access a communications network and interact with other similarly-enabled devices, such as other programmers and a database.

[0030] The capabilities of an interactive implantable medical device system according to the invention facilitate improved patient care by eliminating unnecessary geographic limitations on device interrogation and programming—anywhere there is access to a communications network a patient's medical device can be queried and updated as necessary. A physician at a remote location can easily retrieve data not only from the implantable device but also from the patient's handheld computing device (which may include notes, annotations, a seizure logs, and the results of any surveys or examinations requested by the physician or the system), analyze it in whatever manner is most convenient and effective, derive new device settings from the data, and program the device remotely to accept the new parameters. The kind of detailed analysis allowed by a system such as the one described herein, which allows the consideration of a far greater amount of diagnostic information than traditionally available, further facilitates a greater understanding of the patient's condition and, ideally, any imminent risks. This is especially true because the remote data collection and update capabilities allow data to be collected more frequently, allowing a patient's status and progress to be tracked in greater detail, even if the patient is not nearby. If a risk or some other urgent circumstance is observed, the system permits messages and alerts to be provided to the individuals who might need them—the patient, the patient's physician, and even field clinical support personnel if a device malfunction is suspected.

[0031] The system also permits a patient to have a much greater involvement and investment in his or her course of treatment, if such involvement is clinically desirable. Through the use of the handheld computing device, the patient can receive information, alerts, and messages about his or her condition, from the implanted device itself or from the communications network. If the patient has concerns about how the device is operating, a message can be sent to a physician or a note can be stored for later retrieval. This facilitates improved follow-up, even when the patient's physician is not easily reached.

BRIEF DESCRIPTION OF THE DRAWINGS

[0032] These and other objects, features, and advantages of the invention will become apparent from the detailed description below and the accompanying drawings, in which:

[0033] **FIG. 1** is a diagram illustrating an exemplary basic exemplary personal control unit (PCU) for use with an implantable device and a communications network according to the invention;

[0034] **FIG. 2** is a block diagram illustrating an exemplary implantable device in communication with several illustrative network unit types according to the invention;

[0035] **FIG. 3** is a block diagram of an embodiment of an implantable device according to the invention;

[0036] **FIG. 4** is a block diagram of an embodiment of a generic network unit according to the invention;

[0037] **FIG. 5** is a block diagram of an exemplary I/O subsystem of the network unit illustrated in **FIG. 4**;

[0038] **FIG. 6** is a block diagram of the functional structure of an exemplary database according to the invention;

[0039] **FIG. 7** is a flow chart illustrating an overall function and command chart with command sources and validation steps required to process commands;

[0040] **FIG. 8** is a flow chart illustrating an exemplary data upload functional process performed according to the invention;

[0041] **FIG. 9** is a flow chart illustrating an exemplary software download functional process performed according to the invention;

[0042] **FIG. 10** is a flow chart illustrating an exemplary parameter download functional process performed according to the invention;

[0043] **FIG. 11** is a flow chart illustrating an exemplary seizure log entry functional process performed according to the invention;

[0044] **FIG. 12** is a flow chart illustrating an exemplary quality of life survey response functional process performed according to the invention;

[0045] **FIG. 13** is a flow chart illustrating an exemplary generic command entry functional process performed according to the invention;

[0046] **FIG. 14** is a flow chart illustrating an exemplary user alert functional process performed according to the invention;

[0047] **FIG. 15** is a flow chart illustrating an exemplary text note entry functional process performed according to the invention;

[0048] **FIG. 16** is a flow chart illustrating an exemplary message sending functional process performed according to the invention;

[0049] **FIG. 17** is a flow chart illustrating an exemplary message receiving functional process performed according to the invention;

[0050] **FIG. 18** is a flow chart illustrating an exemplary continuous monitoring functional process performed according to the invention;

[0051] **FIG. 19** is a flow chart illustrating an exemplary system diagnostics functional process performed according to the invention;

[0052] **FIG. 20** is a flow chart illustrating an exemplary database query functional process performed according to the invention;

[0053] **FIG. 21** is a flow chart illustrating an exemplary storage management and housekeeping functional process performed according to the invention;

[0054] **FIG. 22** is a flow chart illustrating an exemplary user authentication functional process performed according to the invention; and

[0055] **FIG. 23** is a flow chart illustrating an exemplary compulsive use rejection functional process performed according to the invention.

DETAILED DESCRIPTION OF THE INVENTION

[0056] The invention is described below, with reference to detailed illustrative embodiments. It will be apparent that a system according to the invention may be embodied in a wide variety of forms. Consequently, the specific structural and functional details disclosed herein are representative and do not limit the scope of the invention.

[0057] Referring initially to **FIG. 1**, an implantable device **110** is illustrated. In the disclosed embodiment of the invention, the implantable device is a programmable neurostimulator for the treatment of epilepsy and other neurological disorders. See U.S. application Ser. No. 09/896,092, filed on Jun. 28, 2001, for a description of an exemplary neurostimulator; U.S. Pat. No. 6,016,449 to Fischell et al. contains illustrative details of an alternative embodiment.

[0058] The present invention enables communication between the implantable device **110** and a communications network **112** (such as the Internet) by way of a personal control unit (PCU) **114** or a similar device (various embodiments of which will be described in greater detail below). The PCU **114** is adapted to receive user input **116** and to pass it along to the communications network **112** or the implantable device **110**, as appropriate, and also to receive information from the communications network **112** and the implantable device **110** and pass that information as user output **118**. It should be noted that the term "PCU" is used herein for any apparatus of the sort used to interact with an implantable medical device system according to the invention, even if control is not specifically possible and the device is used only for monitoring purposes.

[0059] The PCU **114** communicates with the implantable device **110** via a wireless link **120** (typically inductive or RF), which in an embodiment of the invention is accomplished through a special-purpose expansion module **122** adapted to couple to an expansion connector of the PCU **114**. In this embodiment, the PCU **114** need not include a substantial amount of custom hardware; it can be little more than a standard personal digital assistant (PDA), such as a Palm Pilot®, PocketPC®, or other portable (and preferably handheld) computing device, programmed and interfaced to accomplish the objectives described herein.

[0060] The PCU **114** typically also includes at least one data link **124** to the communications network **112**. If the PCU **114** includes a built-in wireless communication capability (operating under any of several known protocols, such as IEEE 802.11b, Bluetooth, or digital cellular), an antenna **126** might be built into the PCU **114** to facilitate the data link **124**. Alternative versions of the data link **124** are also possible, including part-time wired links (such as USB and Ethernet) from either the PCU **114** or a docking station **128** to the communications network **112**. Even if a wireless version of the data link **124** is available, it may be desirable in some circumstances to also have a secondary link **130** from the docking station **128** to serve as a backup or alternative, operating only when the PCU **114** is docked in the docking station **128**, in case the wireless data link **124** is either unavailable or undesired (e.g., in a hospital, airplane, or other electromagnetic interference-sensitive environment). Some of all of the data links described above can be accomplished either directly or through intermediate nodes and interfaces, such as remote access servers.

[0061] The PCU **114** is operated in a manner similar to PDAs and other PDA-like devices. Generally, a touch-sensitive screen is provided for user input and output **116** and **118**. A touch-sensitive input portion **134** is reserved for writing with a stylus **136**. In an alternative embodiment of the PCU **114**, a keyboard might be provided. Audio input and output, uses of which will be described in further detail below, are accomplished with a microphone **138** and a speaker **140**. For navigation and command purposes, several buttons **142** are provided on the PCU **114**. These buttons can be used to command the PCU **114** to initiate special actions in a system according to the invention, or can have the usual function assigned to such buttons in a standard PDA. A docking station button **144** is also available to indicate when it is desired to "synchronize" (i.e., send and receive) data between the PCU **114** and the communications network **112**.

[0062] While the PCU **114** illustrated in **FIG. 1** greatly resembles a traditional PDA in form and operation, specialized peripherals and programming enable operation of the PCU **114** according to the invention. It should also be noted that alternative embodiments of the PCU **114** might take very different physical forms. For example, instead of a handheld PDA-like design, a relatively stationary home base unit with a display, input provisions (such as a keyboard), and interfaces might also be used. A personal computer with the necessary interface peripherals (along the lines of the expansion module **122** and the antenna **126**) and software might also be used. These and other possible embodiments will be described in further detail below.

[0063] **FIG. 2** illustrates an exemplary network configuration according to the invention. Accordingly, the network

units illustrated in **FIG. 2** are intended to depict a wide variety of different devices and configurations according to the invention, and likely do not reflect a real-world network topology or configuration.

[**0064**] The implantable device **110** is capable of communication with a wide variety of external devices. In addition to the PCU **114**, the implantable device **110** is adapted for communication with a base unit **210** (which is in turn adapted for communication with the communications network **112** either directly or through a remote access server **212**), a mobile base unit **214**, a programmer **216**, and a properly equipped personal computer **218**.

[**0065**] As described above, the PCU **114** is generally a handheld computer with enhanced communications capabilities and special-purpose programming for use in a system according to the invention. The base unit **210** is similar, but typically is a larger device not intended for mobile use. Accordingly, because of the different physical configuration, some changes in equipment are possible and desirable. For example, a base unit according to the invention would typically include a data entry keyboard, a relatively larger display screen, and in most cases a wired network connection (analog modem, ISDN, telephone line DSL, or DOCSIS on coaxial cable), Ethernet, and other connectivity schemes are among the possibilities).

[**0066**] In an embodiment of the invention, since the base unit is not mobile or portable, a hand-held "wand" coupled to the base unit **210** is included to establish a short-distance communication link between the implantable device **110** and the base unit **210**. A similar apparatus may be used with the programmer **216** or the personal computer **218** to enable communications with the implantable device. Details of an exemplary wand will be described in further detail below. It should be noted, however, that no separate wand may be necessary if a longer-distance (e.g., at least several meters) communications link is possible between the implantable device **110** and the base unit **210**, or if the base unit **210** communicates with the implantable device **110** exclusively through the PCU **114**.

[**0067**] The base unit **210** is suitable for use by patients (and caregivers) who either cannot or prefer not to carry the PCU **114**. It can also be used in connection with the PCU **114**, enabling a patient, caregiver, or other user to take advantage of the potentially larger form factor and other features (such as a full-sized keyboard and/or display screen) to more easily read and enter data and commands.

[**0068**] As referenced above, in one embodiment of the invention, the base unit **210** serves as an intermediary between the PCU **114** and the communications network **112**. In this embodiment, the PCU **114** is provided with a relatively short-range network data link **124** (**FIG. 1**), such as one that uses the IEEE 802.11b wireless networking protocol. The range of such a network data link **124** should be sufficient for convenient use. Alternatively, to give one example, the docking station **128** for the PCU **114** can be connected via a wired link to the base unit **210**, which would then complete the network data link **124** to the communications network **112** by periodically establishing a trans-telephonic connection to the remote access server **212**.

[**0069**] The remote access server **212** is an apparatus that allows communications between any of the network units **114**, **210**, **214**, **216**, and **218** of the invention and the communications network **112**. It is not necessary in all circumstances (for example, when one or more of the network units have a direct interface to the communications network), but frequently is employed to translate between the protocols used for short-range and point-to-point networking (typically used on the "local" side **226** of the system illustrated in **FIG. 2**—i.e. relatively near the patient with the implantable device **110**) and the backbone technologies used by the carriers and providers that provide access to the communications network **112** (on the "remote" side **228** of the system—i.e. relatively far from the patient with the implantable device **110**), for example via T1, T3, OC3, OC12, OC48, or OC192 lines. Accordingly, to accommodate geographically distributed users of a system according to the invention, multiple remote access servers would generally be used, and to accommodate different local and remote communications protocols, multiple different types of remote access servers (such as modem pools, wireless network base units, LAN-to-WAN bridges and routers, and other network interfaces and points of presence) can be employed. The single remote access server **212** illustrated in **FIG. 2** is intended to be illustrative in nature, and as shown, allows the base unit **210** and the moble base unit **214** to connect to the communications network **112**. Other network configurations are of course possible and consistent with the invention described herein.

[**0070**] The programmer **216** is a device that is typically operated by medical personnel (such as the patient's treating physician) to control the operation of the implantable device **110**. In general terms, the programmer **216** functions as a clinical interface to the implantable device **110**, allowing its parameters to be modified, and for data and/or program code to be uploaded from and downloaded to the implantable device **110**. For a more detailed explanation of an exemplary programmer, see U.S. patent application Ser. No. 09/977,052, filed on Oct. 12, 2001. Any given programmer may be located near the patient (as is the local programmer **216**) or at a remote location (as are the remote programmers **220**). Unless it is desired to directly interrogate or program the implantable device **110** using the local programmer **216**, any of the programmers available in a system according to the invention can be used to perform various programming functions. This will be explained in further detail below.

[**0071**] A system according to the invention includes a database **222** and a network server **224**. The database serves as a centralized data repository for all data relevant to the operation of the system, and may include clinical data, program code, and more. The centralized nature facilitates the use of remote programmers **220** and any other remote equipment enabled in a system according to the invention, as none of the programmers, base units, computers, or PCUs are necessarily 100% reliant on locally stored data. One or more of these devices is preferably configured to obtain data from and store data in the database **222**. Accordingly, even if one of the remote programmers **220** has had no experience with a particular patient or implantable device **110**, the database **222** is accessible to retrieve all of the information that would otherwise have been located only in the local programmer **216**.

[**0072**] The network server **224** acts as the primary interface between the database **222** and other devices attached to the communications network **112**. Although it might be

possible and advantageous in certain circumstances to communicate directly with the database **222**, it is generally preferable to configure the network server **224** to receive queries, perform necessary authentication, access the database **222**, and respond as necessary, thereby reducing the processing load on the database **222** and also reducing the exposure of the database **222** to network traffic (thereby improving security).

[**0073**] It should be noted that although a single database **222** and a single network server **224** are depicted in **FIG. 2**, this configuration is only an exemplary functional depiction of network structure. It is possible to achieve the goals of the present invention with multiple databases and/or network servers, and it may be advantageous in certain circumstances to use a distributed data repository rather than a centralized one, to facilitate load balancing and to increase reliability in the event of network and equipment outages.

[**0074**] It will be recognized that the network configuration illustrated in **FIG. 2** (like similar network configurations also within the scope of the invention) enables continuity of treatment during travel by patient, clinician, or both. The multiple remote programmers **220** (or even a single programmer attached to the communications network **112** remotely) allow a treating clinician or other authorized individual to monitor and treat patients, adapt or change settings on the implantable device **110**, or administer various aspects of the system from afar. And in addition to the remote programmers **220** illustrated in **FIG. 2**, it is possible to have remote base units and PCUs, operated by the patient, a caregiver, or a clinician, capable of interaction with the system.

[**0075**] An overall block diagram of the implantable device **110** used for measurement, detection, and treatment according to the invention is illustrated in **FIG. 3**. Inside the housing of the device **110** are several subsystems making up a control module **310**. The control module **310** is capable of being coupled to a plurality of electrodes **312**, **314**, **316**, and **318** for sensing and stimulation. Although four electrodes are shown in **FIG. 3**, it should be recognized that any number is possible, and in the embodiment described in detail below, eight electrodes are used. In fact, it is possible to employ an embodiment of the invention that uses a single lead with at least two electrodes, or two leads each with a single electrode (or with a second electrode provided by a conductive exterior portion of the housing in one embodiment), although bipolar sensing between two closely spaced electrodes on a lead is preferred to minimize common mode signals including noise.

[**0076**] The electrodes **312-318** are connected to an electrode interface **320**. Preferably, the electrode interface is capable of selecting each electrode as required for sensing and stimulation; accordingly the electrode interface is coupled to a detection subsystem **322** and a stimulation subsystem **324**. The electrode interface also may provide any other features, capabilities, or aspects, including but not limited to amplification, isolation, and charge-balancing functions, that are required for a proper interface with neurological tissue and not provided by any other subsystem of the implantable device **110**.

[**0077**] The detection subsystem **322** includes an EEG analyzer function. The EEG analyzer function is adapted to receive EEG signals from the electrodes **312-318**, through the electrode interface **320**, and to process those EEG signals to identify neurological activity indicative of a seizure, an onset of a seizure, or a precursor to a seizure. One way to implement such EEG analysis functionality is disclosed in detail in U.S. Pat. No. 6,016,449 to Fischell et al., incorporated by reference above; additional inventive methods are described in detail below. The detection subsystem may optionally also contain further sensing and detection capabilities, including but not limited to parameters derived from other physiological conditions (such as electrophysiological parameters, temperature, blood pressure, etc.).

[**0078**] The stimulation subsystem **324** is capable of applying electrical stimulation to neurological tissue through the electrodes **312-318**. This can be accomplished in any of a number of different manners. For example, it may be advantageous in some circumstances to provide stimulation in the form of a substantially continuous stream of pulses, or on a scheduled basis. Preferably, therapeutic stimulation is provided in response to abnormal events detected by the EEG analyzer function of the detection subsystem **322**. As illustrated in **FIG. 3**, the stimulation subsystem **324** and the EEG analyzer function of the detection subsystem **322** are in communication; this facilitates the ability of stimulation subsystem **324** to provide responsive stimulation as well as an ability of the detection subsystem **322** to blank the amplifiers while stimulation is being performed to minimize stimulation artifacts. It is contemplated that the parameters of the stimulation signal (e.g., frequency, duration, waveform) provided by the stimulation subsystem **324** would be specified by other subsystems in the control module **310**, as will be described in further detail below.

[**0079**] Also in the control module **310** is a memory subsystem **326** and a central processing unit (CPU) **328**, which can take the form of a microcontroller. The memory subsystem is coupled to the detection subsystem **322** (e.g., for receiving and storing data representative of sensed EEG signals and evoked responses), the stimulation subsystem **324** (e.g., for providing stimulation waveform parameters to the stimulation subsystem), and the CPU **328**, which can control the operation of the memory subsystem **326**. In addition to the memory subsystem **326**, the CPU **328** is also connected to the detection subsystem **322** and the stimulation subsystem **324** for direct control of those subsystems.

[**0080**] Also provided in the control module **310**, and coupled to the memory subsystem **326** and the CPU **328**, is a communication subsystem **330**. The communication subsystem **330** enables communication between the implantable device **110** (**FIG. 1**) and the outside world, particularly an external PCU **114** (**FIG. 1**), programmer **216** (**FIG. 2**), or other apparatus according to the invention. As set forth above, the disclosed embodiment of the communication subsystem **330** includes a telemetry coil (which may be situated outside of the housing) enabling transmission and reception of signals, to or from an external apparatus, via inductive coupling. Alternative embodiments of the communication subsystem **330** could use an antenna for an RF link or an audio transducer for an audio link.

[**0081**] Rounding out the subsystems in the control module **310** are a power supply **332** and a clock supply **334**. The power supply **332** supplies the voltages and currents necessary for each of the other subsystems. The clock supply **334** supplies substantially all of the other subsystems with any clock and timing signals necessary for their operation.

[0082] It should be observed that while the memory subsystem **326** is illustrated in **FIG. 3** as a separate functional subsystem, the other subsystems may also require various amounts of memory to perform the functions described above and others. Furthermore, while the control module **310** is preferably a single physical unit contained within a single physical enclosure, namely the housing, it may comprise a plurality of spatially separate units each performing a subset of the capabilities described above. Also, it should be noted that the various functions and capabilities of the subsystems described above may be performed by electronic hardware, computer software (or firmware), or a combination thereof. The division of work between the CPU **328** and the other functional subsystems may also vary—the functional distinctions illustrated in **FIG. 3** may not reflect the integration of functions in a real-world system or method according to the invention.

[0083] Referring now to **FIG. 4, a** block diagram representing a generic network unit **410** (of which the PCU **114**, base unit **210**, mobile base unit **214**, programmer **216**, and personal computer **218** of FIGS. **1-2** are all species) is set forth in detail.

[0084] The network unit **410** is a general-purpose or special-purpose computer programmed or adapted for use according to the invention. Accordingly, it includes a wide area communications interface **412** for communications with the communications network **112** (**FIG. 1**), and if it will be used to connect to other nearby devices (such as the implantable device **110**, the PCU **114**, or the base unit **210**), it also includes a local area communications interface **414**. Preferably, both the wide area communications interface **412** and the local area communications interface **414** are capable of bi-directional communications.

[0085] The network unit is controlled by a CPU **416**. The CPU is coupled (either directly or through a bus controller, as is typical in the art of computer design) to the wide area communications interface **412**, the local area communications interface **414**, a memory subsystem **418** (which might include ROM, DRAM, and other random-access memory) for programming and short-term storage, a storage subsystem **420** (which might include a hard drive, flash memory, and other non-volatile storage), and an input/output subsystem **422** used to pass information to and receive information from a user. The input/output subsystem **422** will be described in further detail below with reference to **FIG. 5**.

[0086] The operation of the network unit is controlled by a power supply **424** and a clock supply **426**. The power supply **424**, in the case of a handheld unit such as the PCU **114**, typically includes batteries, while other types of network units might receive power from AC outlets. A combination of the two sources (as is common with laptop computers) might also be used. The clock supply **426** supplies substantially all of the other subsystems of the network unit with any clock and timing signals necessary for their operation.

[0087] As with the implantable device **110**, described above, it should be observed that while the memory subsystem **418** is illustrated in **FIG. 4** as a separate functional subsystem, the other subsystems may also require various amounts of memory to perform the functions described herein and others. Furthermore, while the network unit **410** (excluding the wand **428**, if any) is preferably a single physical unit contained within a single physical enclosure, namely the housing, it may comprise a plurality of spatially separate units each performing a subset of the capabilities described herein. Some of the functions or subsystems of the network unit **410** might be resident in a removable module, such as the expansion module **122** (**FIG. 1**). In particular, if a standard commercially available computing device is used for the network unit **410** (such as a laptop or desktop computer for the base unit **210** or the programmer **216**), then certain features (such as the local area communications interface **414**, to give one example) might be added via insertion of a commercial or custom peripheral, e.g. a PC Card. If a commercial handheld computer is used for the PCU **114**, then other possibilities will be evident (e.g. a Springboard® module for the Handspring Visor® line of PDAs).

[0088] It should be noted that the various functions and capabilities of the subsystems of the network unit **410** described above may be performed by electronic hardware, computer software (or firmware), or a combination thereof. The illustration of **FIG. 4** illustrates several of the major functional subsystems present in a network unit consistent with the invention. However, it should be noted that in many computing systems, other functional subsystems and modules are present that are not necessarily reflected in **FIG. 4**. Moreover, an actual network unit **410** according to the invention might integrate two or more of the above-referenced subsystems. For example, the wide area communications interface **412** and the local area communications interface **414** might be adapted into a single subsystem if efficiencies result therefrom. Accordingly, **FIG. 4** is for purposes of illustration only, and does not necessarily reflect the actual configuration of the PCU **114**, the base unit **210**, the mobile base unit **214**, the programmer **216**, or the personal computer **218**. It is, however, considered to be representative.

[0089] As described above, certain network units (such as the base unit **210**, the programmer **216**, or the personal computer **218**) might include a connected but separate wand **428** to enable a short-range, e.g. inductive, wireless link to the implantable device. In such a network unit **410**, the local area communications interface **414** is generally separate from the remainder of the network unit **410** and is coupled thereto via a wire or other connection.

[0090] An exemplary embodiment of the Input/Output Subsystem **422** of **FIG. 4** is illustrated in greater detail in **FIG. 5**. As shown, the Input/Output Subsystem **422** includes an I/O Controller **510** capable of coordinating the actions of various portions of the subsystem. One or more of the portions **512-528** of the Input/Output Subsystem **422** illustrated in **FIG. 5** are optional; it should be noted that various embodiments of a network unit **410** according to the invention will generally include only a subset of the capabilities described herein. It would be unusual (though possible) for a network unit to include all illustrated input and output facilities.

[0091] Some input possibilities are as follows. A keyboard **512**, such as a traditional computer keyboard, can be used in connection with larger network units (such as base units and programmers). On smaller units, a smaller keyboard **512** can be made available (such as that provided on the Blackberry®

handheld device by Research In Motion), or a "soft keyboard" can be provided in conjunction with a touch screen, such as on the Palms handheld devices. It will be recognized that other data input paradigms are also possible (that may be considered analogous to a keyboard, in that alphanumeric and other data can be entered thereby) and known in the art; such alternatives might take the place of the keyboard **512** in a system according to the invention.

[**0092**] A microphone **514** (such as the microphone **138**) can be used to receive audio input. This might be useful for several purposes, including recording audio messages for storage or transmission to remote locations, for data input via speech recognition, or for biometric authentication via voice recognition. Audio processing is relatively storage and computationally intensive, so a network unit **410** having speech recognition or voice recognition capabilities according to the invention would generally require a more powerful CPU **416** and more memory **418** and storage **420** than otherwise.

[**0093**] A pressure pad **516** (such as the input portion **134**) can be used to receive tactile and gestural input in a system according to the invention. The pressure pad **516** can be used for data entry, for example handwriting recognition (either conventional handwriting or a special-purpose symbol set adapted for improved recognition accuracy, such as the Graffiti scheme used in Palm® handhelds). It can also be used as a pointing and selection device analogous to a "mouse" on a desktop computer system of the pressure pad found on many laptop computers. Other gestural sensors in addition to the pressure pad **516** are also possible; for example, position and orientation detectors might be used advantageously in a system according to the invention for data entry or pointing and selection.

[**0094**] A navigation control **518** (such as one or more of the buttons **142** or the jog wheel **143** of **FIG. 1**) is usable to effect pointing, selection, and navigation through numerous menus provided by the software of the network unit **410**. In an embodiment of the PCU **114**, for example, one or more of the buttons **142** might be adapted to interpret pushes in different directions as different navigational controls. Similarly the jog wheel **143** might be used to navigate upward or downward within a menu displayed on the PCU **114**. In a desktop system, a mouse or trackball might be used instead of buttons or a jog wheel. Various other navigation controls are, of course, possible and consistent with the invention described herein.

[**0095**] A biometric sensor **520** is available in an embodiment of the invention to authenticate the user of the network unit **410**. Exemplary biometric sensors include thumbprint, face, and retina scanners, keystroke timing recognition devices, and chemical signature detectors. Numerous other approaches are possible. Although the biometric sensor **520** might be provided in a network unit according to the invention, actual processing and authentication of biometric input need not be performed at the network unit **410** receiving the input. Instead, data representative of the biometric input would be sent to a remote location, such as the database **222**, and processed there.

[**0096**] On a typical network unit **410**, a display **522** is furnished to provide information to the user. On a handheld device, a liquid crystal display (LCD) is typically used, as the power and space requirements are relatively small. On larger systems, such as the base unit **210**, a cathode ray tube (CRT) or other display mechanism might be feasible, although LCD technology is well suited for this application as well.

[**0097**] Aside from the display **522**, a visual indicator **524** might also be provided. It is common for commercially available handheld devices to have one or more light-emitting diode (LED) visual indicators separate from the display, providing instant information regarding alerts and alarms, operational status, power supply, whether messages are waiting, and the like. It is contemplated that the visual indicator **524** in a system according to the information would similarly provide readily understood alert and status information.

[**0098**] A speaker **526** or other audio output device is furnished to provide for the possibility of alarms, data output (via, e.g., tones, tone sequences, music, arbitrary sounds, or even recorded or simulated speech). The speaker **526** can also be used to accomplish a data link via acoustic modulation (as in a traditional analog modem used for transtelephonic data communications). It is envisioned that in a system according to the invention, the speaker **526** would generally be used to provide alerts and alarms to the user, though other uses are certainly possible and might prove advantageous in certain circumstances.

[**0099**] Finally, in the illustrative input/output subsystem illustrated in **FIG. 5, a** tactile output **528** is provided. The tactile output **528** might provide one or more of several possible tactile experiences to the user—a "nudge" sensation, a simulated texture, or (most probably) vibration to name but a few examples. The tactile output **528** can be used to provide information to the user, and a vocabulary of tactile sensations might be established to facilitate relatively complex outputs, but it is presently envisioned that a simple vibration alarm (as is often found on mobile telephones) is the most probable embodiment of the tactile output **528**.

[**0100**] Consistent with the invention described herein (and with the illustration of **FIG. 1**), an embodiment of the PCU **114** would typically include a small LCD display, a pressure pad for navigation and data entry, buttons and controls for navigation control, a visual indicator for power and/or message status, and a speaker or other small audio transducer. Various embodiments of the PCU **114** might include a vibrating alert. The base unit **210**, the programmer **216**, or the personal computer **218** might include a relatively larger CRT or LCD display, a substantially full-sized keyboard, a microphone, a mouse or other pointing device for a navigation control, and sound sound reproduction capability. Likewise, the mobile base unit **214**, though likely similar, might include a smaller display and keyboard. These configurations are intended for illustration only, and it should be noted that any aspect of the present invention might be alternatively configured if a different particular arrangement of capabilities is advantageous in any given context.

[**0101**] **FIG. 6** is an exemplary block diagram of the database **222** and its network server **224** employed in an implantable device system according to the invention. The database **222** and the network server **224** (which acts as an interface to the database **222**) jointly serve as a widely accessible storage repository **610** for various data types, including program code, patient information, and other data, as will be described in detail below.

[0102] As illustrated, the database **222** performs query processing, storage management, application processing, and security management functions. These functions are performed by modules **612**, including a query processing module **614**, a storage management module **616**, an application processing module **618**, and a security management module **620**, respectively. Each of the foregoing modules **614-620** is generally implemented as software on a database server computing system (represented herein by the database **610**), although it should be noted that various modules may be combined in an implementation and that other modules might also be present. Furthermore, the modules described herein can be implemented in hardware, software, or a combination thereof.

[0103] The query processing module **614** is enabled to receive a query message from the communications network **112** (and hence any network unit **410** in a system according to the invention), process the query message and identify responsive data in the database **222**, and respond to the originating device. Accordingly, the query processing module **614** performs a task that is fairly standard and common in database systems, though it should be noted that it is performed in a manner consistent with the invention described herein.

[0104] The storage management module **616** is programmed to track the various items of data stored in the storage **610** of the database **222**, manage the allocation of space, perform backups, and the like. The functions performed by the storage management module **616** are also generally consistent with those performed by known databases, though there may be some differences suggested in the practice of the invention.

[0105] The application processing module **618** is adapted to execute computer programs (such as "servlets") intended for use at the database **222**. For example, any data processing required to accomplish authentication (of users and devices), encryption, compression, and data management is generally performed by the application processing module **618** illustrated in **FIG. 6**.

[0106] The security management module **620** handles any data involved in user and device authorization and authentication, password management, and account management. Although the functions performed by the security management module **620** are similar in some ways to the functions performed by the query processing module and other capabilities of the database **222**, the security functions are separated from other functions to increase reliability and resistance to attack.

[0107] It will be appreciated, as is indicated above, that the database **222** stores several types of information in its storage **610**. In particular, the storage **610** includes two general categories of data: system data and operating data. The first category, system data (essentially the static content of the database **222**, providing context for its operation), includes forms and graphics **622** used in collecting data from and reporting to the network units present in a system according to the invention; any HyperText Markup Language (HTML) code **624** and the like used to generate Web pages to be served to the system; a catalog of messages **626** in text, visual, audio, or other formats to be delivered to users of devices in the system (which can be provided in multiple languages for users who need non-English access); an access log **628** providing a detailed accounting of accesses (and attempted accesses) to the database **222** for audit purposes; and the operative program code **630** used by the database **222** (and particularly the application processing module **618**). The second category, operating data (essentially the dynamic content of the database **222**), includes patient information **632** (vital data of the patients enrolled in the system who have the implantable device **110**), site information **634** (the facilities, such as hospitals, clinics, and assisted living homes, that are authorized and enabled to participate in the system), clinician information **636** (vital data of the physicians, nurses, and other personnel responsible for clinical patient management), and system information **638** (e.g., current information on the state of the devices in the system, authorization lists, password lists, storage and security policies, and other low-level information generally invisible and inaccessible to users).

[0108] Several exemplary relationships among the modules **612** and the various types of data in the storage **610** are set forth below.

[0109] The query processing module **614** uses the forms and graphics **622** to present a meaningful query context to a user, receives a query and stores it in the access log **628**, and responds to the query using additional forms and graphics **622**, the HTML **624**, messages **626**, program code **630**, and any patient, site, clinician, or patient information **632-638** identified in processing the query. The query processing module **614** provides the response to the originating device, which may be the PCU **114**, the base unit **210**, the mobile base unit **214**, the programmer **216** (or a remote programmer **220**), the personal computer **218**, or any other authorized network unit **410**.

[0110] The storage management module **616** manages the dynamic content of the storage **610**, particularly the patient, site, clinician, and system information **632-638**.

[0111] The application processing module **618** is generally responsive to the program code **630**. However, it should be recognized that the program code **630** may be written to require access to various other data in the storage **610**, such as the patient, site, clinician, or system information **632-638**.

[0112] The security management module **620** is operative to access the access log **628**, the patient, site, and clinician information **632-636**, and the system information **638** involved in data and system security (such as user names and passwords). If data processing is necessary in performing authorization or authentication checks, the program code **630** (and hence the application processing module **618**) might also become involved in certain circumstances.

[0113] Other function-data relationships should be evident, and may vary according to the specific application. Additional details of the role of the database **222** in connection with the operation of the present invention will be further described below.

[0114] As generally described above, the database **222** communicates with the communications network **112** (**FIG. 2**) through the network server **224**. Generally, accesses to the database **222** will occur through a web server **640** (one example of which is the Apache open-source web server) resident on the network server **224**. The web server **640** includes an HTTP server **642** in communication with the storage **610** of the database **222**. The HTTP server **642**

processes and responds to any HTTP requests received by the web server **640**. If any server-level programs are required to be run, an application processing capability **644** resident on the web server **640** is available to handle such needs. For example, tasks related to authentication **646** may be necessary before passing a request on to the security management module **620** of the database **222**; the application processing capability **644** is operative to perform such tasks.

[**0115**] Although it is generally understood that most accesses to the database **222** will occur as HTTP requests arriving through the web server **640**, it should be recognized that other access techniques are possible. For example, instant-messaging protocols might also be used to pass data to and from the database **222**. A messaging server **648** is also resident on the network server **224**; it is programmed to handle instant-messaging-type transactions. Other protocols are also possible, and a server program adapted to handle other protocols **650** might also be necessary or advantageous.

[**0116**] **FIG. 7** illustrates a number of possibilities representing procedures for initiating an action in an interactive system according to the invention.

[**0117**] A system according to the invention begins to perform an action upon receipt of one or more of a large number of possible initiating events **710**. Although an action can be initiated at and performed by the same device in the system, that is not always or necessarily the case. Accordingly, it is instructive to consider the system in terms of an initiating device, where the chain of events leading to performance of an action begins, and an acting device, where the action is ultimately carried out. One or more additional network units may also participate in the process as supporting devices, acting as intermediaries, data sources, or simply as parts of the communications network **112**.

[**0118**] In general, when an action is to be performed, a communication link is established (step **712**) among the initiating device, the acting device and any supporting devices. To give one simple example, a physician at a remote location might command the interactive system to administer a quality of life survey to a patient. The process performed in doing so, and some details of quality of life surveys in general, will be described in greater detail below. In this case, one of the remote programmers **220**, used by the physician, is the initiating device. The patient's PCU **114**, used to administer the survey, is the acting device. There are several supporting devices: any intermediate communications nodes, such as the base unit **210** (between the communications network **112** and the PCU **114**) used to relay information between the remote programmer **220** and the PCU **114**; the database **222**, where survey results are ultimately stored; and the network server **224**, which is generally interposed between the communications network **112** and the database **222**.

[**0119**] It should be noted that the communication link established in step **712** need not be real-time in all cases. To enable a system according to the invention when one or more network units are either disabled or disconnected from the network, certain data messages between network units can be deferred or queued by the transmitting device. Where a message has high urgency or importance, the deferral or queuing may be accompanied by a message to the user to establish a link (e.g., by docking the PCU **114**, moving into range of the base unit **210**, or connecting to a telephone line).

[**0120**] The user of the initiating device is then authenticated (step **714**). Preferably, this is performed according to the method described below and illustrated in **FIG. 22**. In general terms, user authentication involves confirming with an authentication server, either locally or remotely, that the individual using the initiating device is who he or she claims she is. This can be accomplished through login names and passwords, biometrics, or any of a number of other known techniques.

[**0121**] The source, the initiating device itself, is then also optionally authenticated (step **716**). This operation can be performed in a manner similar to the user authentication method set forth above. This is done to ensure that the interactive system of the invention is not being accessed by an unauthorized device, which might lead to problems (especially if the access attempts are malicious). The type of authentication data used to authenticate the source would generally be a numeric code or other unique identifier either preset or programmed into each network unit used in accordance with the system.

[**0122**] Like other transactions in a system according to the invention, user or source authentication can be deferred or queued if communication is not immediately possible. In this case, a system according to the invention would preferably conditionally allow the desired transaction (or at least any data entry related to the transaction), but not store it in the database **222** or elsewhere until authentication is successfully completed. In other cases, for example when potentially confidential patient records are requested, transactions may be disallowed if authentication cannot be completed in real time.

[**0123**] The nature of the action to be performed is then analyzed and verified against one or more allowability rules (step **718**). The timeliness of the action (i.e., whether the action is being performed at an appropriate time, given the user's history) is considered according to the method described below and illustrated in **FIG. 23**, and if the user is attempting to perform certain actions too often or at improper times, the action may be denied. Other desired criteria might also be applied. For example, certain users might be locked out from certain functions.

[**0124**] If user authentication, source authentication, and action verification all complete successfully, then the desired action is performed (step **720**). As will be described in detail below, there are numerous possibilities for the action to be performed. In particular, it is possible to upload data from the implantable device **110** or any other network unit (see **FIG. 8**), to download software to the implantable device **110** or another network unit (**FIG. 9**), to download detection parameter sets to the implantable device **110** (**FIG. 10**), to handle the entry and storage of seizure logs (**FIG. 11**), to handle the administration and storage of quality of life surveys, neurophysiological exams, and the like (**FIG. 12**), to allow a command to be entered and processed (**FIG. 13**), to alert a device user to an urgent condition (**FIG. 14**), to enter a note or annotation pertaining to data (**FIG. 15**), to send a message (**FIG. 16**), to receive a message (**FIG. 17**), to monitor EEG or other data in real time (**FIG. 18**), to perform system diagnostics (**FIG. 19**), or to query a database (**FIG. 20**). Other actions are also possible and will be apparent to a practitioner of skill in the art.

[0125] As set forth above, a number of possible initiating events **710** can be used to cause one or more of the above-referenced actions to be performed. For example, a neurological event detection **730** (typically observed by the implantable device **110** of **FIG. 1**) can be used to initiate the transmission of a message to a physician, alert one or more device users (such as the patient), or both. A detection by the implantable device **110** or the PCU **114** that EEG storage is full or nearly full might also cause an alert and/or a message requesting that a data upload be performed.

[0126] Similarly, a command **732** entered at the implantable device **110** (e.g., by audio command, tapping, or magnet use), the PCU **114** (e.g., via any of its input capabilities), the base unit **210**, or the programmer **216**, can initiate nearly any of the possible actions performable by a system according the invention. It is anticipated that each of the foregoing devices might be able to accept different types of commands. For example, the implantable device **110** might receive commands by moving a magnet into and away from the vicinity of the device; the PCU **114** might receive commands via button presses, handwriting recognition, or voice recognition; and the base unit **210**, mobile base unit **214**, programmer **216**, and personal computer **218** might all receive commands from a keyboard or pointing device.

[0127] For example, pressing a button on the PCU **114** (or entering a command into the handwriting input portion **134**) might initiate a data upload, a software download, a seizure log entry, a note entry, a message transmission, real-time EEG monitoring, or a database query, to name but a few likely actions. Pressing a GUI button on the programmer **216** might initiate a data upload, a parameter download, real-time monitoring, or numerous other options. There are too many possibilities to list them all; they would be apparent to a practitioner of ordinary skill in the art.

[0128] Various actions might be performed as a result of an entry in a programmed time schedule **734**. For example, a scheduled event might cause the implantable device **110** to alert the patient to upload data. Other possibilities will be apparent with regard to the PCU **114**, the base unit **210**, the programmer **216**, or the database **222**. In particular, routine scheduled entry of a quality of life survey might be scheduled at the PCU **114**, the base unit **210**, or the programmer **216**. The database **222** might perform maintenance or storage management tasks on a particular schedule. Any of the devices according to the invention might perform diagnostics at certain scheduled times. There are, of course, numerous other possibilities.

[0129] An action might be performed in response to a message **736** received by the implantable device **110**, the PCU **114**, the base unit **210**, the programmer **216**, or the database **222**. This feature, in an embodiment of the invention, can be considered a "remote command" capability—one of the network units is commanded to perform an action via the communications network **112** or some other communication link. For example, a command entry at the PCU **114** might cause the implantable device **110** to perform a certain action, such as store a record of EEG data or switch modes—this would be accomplished via a message transmitted from the PCU **114** to the implantable device **110** (and also possibly to the database **222** for record keeping purposes). Many other possibilities will be apparent.

[0130] One or more actions can be performed as a result of a calculation **738** performed by the implantable device **110**, the PCU **114**, the base unit **210**, the programmer **216**, or the database **222**. For example, an evaluation of recently-uploaded EEG data at the programmer **216** or the database **222** might indicate that a patient is particularly susceptible to seizures over a time period in the near future; that calculation in an embodiment of the invention might cause an alert to the patient and/or a message to the patient's physician to be generated automatically. Similarly, a calculation based on patient data uploads or other use of the system might be made at the PCU **114**, the base unit **210**, or the programmer **216** to determine whether a message should be sent or a physician office visit should be scheduled.

[0131] While it is observed above that a number of the communications operations performed in a system according to the invention can be deferred or queued if the communications network **112** is unavailable or should not be used (e.g., wireless communications in a hospital environment), the remaining portion of this specification will assume real-time communications. Numerous possible alternate methods involving deferred or queued communications will be apparent to the reader.

[0132] **FIG. 8** illustrates the process performed in uploading data stored by the implantable device **110** to another device according to the system accessible via the communications network **112**, such as the PCU **114**, the base unit **210**, or the programmer **216**.

[0133] Initially, the implantable device **110** identifies any new data to be uploaded (step **810**). If there is any new data for upload (step **812**), the new data is transferred (step **814**) over a link (such as the wireless link **120**) to a target device, such as the PCU **114**, the base unit **210**, or the programmer **216**. Any suitable communications protocol can be used for the link. The new data is then cleared (step **816**) after it has been transferred. Optionally, before the data is cleared, a handshaking or confirmation operation between the implantable device **110** and the target device can be used to confirm that the data transfer completed successfully. Alternatively, the new data is not cleared upon every transfer operation according to **FIG. 8**, but is cleared only upon command from the target device (e.g., after the new data has been successfully stored and reconciled) or upon certain additional operations being performed such as programming (see **FIG. 10**). The recently transferred new data is then sent on (step **818**) to the database **222** for long-term storage. At this stage, optionally, the new data can also be sent to other network units, such as the programmer **216** or a remote programmer **220** to allow it to be analyzed or otherwise used.

[0134] If there is no new data for the device **110** to transfer (step **812**), then no transfer operation is performed. However, it should be noted that a message to that effect (i.e., no new data) can optionally be sent to one or more network units. See the description of **FIG. 16**, below.

[0135] The same process illustrated in **FIG. 8** can also be used to upload information from the PCU **114** or another device on the network **112** that periodically transfers information to the database **222** or elsewhere. In such an embodiment, the operation of clearing data (step **816**) might be performed differently under different circumstances—for example, the PCU **214** and the programmer **216** are preferably programmed to retain some information even after a synchronization or transfer operation is performed, such as a summary and log of the transferred data. Accordingly, the

specific devices (e.g., the device **110**, the PCU **114**, and the database **222**) are used as exemplary data sources and targets, and others are certainly possible within a system according to the invention.

[**0136**] **FIG. 9** illustrates the process used in a system according to the invention to download new software and software updates from one device to another. For example, it is contemplated that software updates for the implantable device **110** will reside in the database **222**, but typically will be transferred from the database **222** to another network unit (such as the PCU **114** or the programmer **216**, to name two) prior to programming the implantable device **110**.

[**0137**] The process begins by examining the revision level of the software at the source device, for example the PCU **114** or the programmer **216** (step **910**). The revision level of the software at the target device, for example the implantable device **110**, is then also checked (step **912**). If the target device has an older version of the software, then an update is performed (step **914**). The software program is transferred from the source device to the target device (step **916**) and installed. The source device's records are then updated to reflect the transfer and installation of the new software (step **918**), and the target device's records are also updated accordingly (step **920**). The originating updater, for example the database **222**, is then notified that the implantable device **110** (or other network unit) has received and is running the latest software update (step **922**).

[**0138**] If the target device already has the newest software revision, then no update is performed (step **914**) and the originating updater is informed that no update was performed (step **922**).

[**0139**] When the upgrade is complete, the target device verifies the integrity of the newly received code (for example, by comparing checksums or performing other diagnostics). In an embodiment of the invention, if the upgrade failed, the old software remains operative, and if the upgrade succeeded, the new software replaces the old. The updating device is notified accordingly (as in step **922**), or alternatively, awaits a query from the database **222** or other updating device.

[**0140**] Besides the implantable device **110**, it might be desirable to enable other network units according to the invention to receive and accept software updates according to the method set forth in **FIG. 9**. For example, improved versions of the software operating on the PCU **114** might be provided by the same mechanism. Additional functionality or reliability can also be provided this way for other network units, including the base unit **210** and the programmer **216**.

[**0141**] When a new software version is deployed, it is frequently desired to update as many devices as possible within a short period of time. Accordingly, in an embodiment of the invention, the database **222** (or other network unit storing the software update) is enabled to perform a network broadcast or multicast of the software update to many network units (such as PCUs or programmers) simultaneously or substantially simultaneously, with the network units enabled to update the software in their respective implantable devices (i.e., those implantable devices that are directly or indirectly connected) or other target devices. This procedure is preferably performed as automatically as possible. If certain target devices are unaccounted for after time has elapsed, and those devices have not connected to any network unit for an upgrade of the sort described above, then messages can be sent to the patients or caregivers responsible for the not-yet-upgraded target devices. Sending messages will be described in additional detail below with reference to **FIG. 16**.

[**0142**] As is described in greater detail in U.S. patent application Ser. No. 09/977,052 (referenced above), optimum performance of the implantable device **110** is dependent on the use of patient-specific parameters and other device settings that are generally developed and calculated outside of the device **110**. Such sets of parameters and settings are generally referred to, herein and elsewhere, as "templates." In particular, it is contemplated that templates are developed by receiving raw patient-specific data from the implantable device **110** (or other data recording apparatus), by the method illustrated in connection with **FIG. 8**, above, processing the patient-specific data at the programmer **216** or the database **222**, developing a suitable patient-specific parameter set, and then updating the parameter set used by the implantable device **110** by transferring it to the device **110**.

[**0143**] An advantageous method for updating templates and parameters in the implantable device is illustrated by the flow chart set forth in **FIG. 10**. To start the process, the old parameter set is uploaded from the device **110** if necessary or desired (step **1010**). This possibility is provided to allow the programmer **216**, if it was not the source of the old parameter set (and if it is not possible to access the database **222** to otherwise obtain the old parameter set) to receive the old parameter set and use it as a starting point for modifications. Once modifications are complete or a new parameter set has otherwise been obtained (step **1012**), the new parameter step is time-stamped for reference purposes (step **1014**) and it is determined whether an update is necessary or desired (step **1016**). The decision to update is preferably left to the discretion of the treating clinician.

[**0144**] If an update is desired, the new parameter set is downloaded (step **1018**) to the device **110**, and if successful, records in the source device (e.g. the programmer **216**) and the target device (e.g. the device **110**) are updated accordingly (steps **1020** and **1022**, respectively). The updating device or other data repository, such as the database **222**, is then notified (step **1024**) that a new parameter set is in place, or alternatively failure or success messages are sent upon query from the data repository.

[**0145**] Also important to effective seizure and other neurological event detection according to the invention is the ability to annotate data received from the implantable device **110**, that is, to correlate the raw data with clinical observations. Such correlated clinical observations can be a tremendous assistance in the development of patient-specific detection parameter sets. Accordingly, as one of the goals of implantable medical devices is to facilitate patient independence, patients having such devices will not always be under direct medical observation. The patients themselves, however, can be a source of information.

[**0146**] In traditional epilepsy care, for example, patients are often provided with a seizure log, essentially a notebook in which to record dates, times, and symptoms of episodes they experience. Although entries made by epilepsy patients are not definitively reliable, such entries can be useful to

clinicians in diagnosis, ongoing treatment, medication management, and other applications. And for purposes of parameter set development for the implantable device, seizure log entries serve a more direct purpose. They enable the annotation of EEG data to indicate where seizures occur and where automated detections should be occurring. Although EEG data will still typically be reviewed by a trained epileptologist, seizure log information from the patient can improve the process dramatically by pointing out specific time periods of interest and reducing the (often tremendous) amount of raw data the clinician must examine. See U.S. patent application Ser. No. 09/977,052, referenced above, for additional details.

[**0147**] A system according to the invention is particularly well suited for functionality resembling that of a traditional paper seizure log. A PDA (such as the PCU **114**) can be programmed to accept seizure-log-type data from the patient upon command. This kind of functionality is particularly convenient in a portable device, such as the PCU **114**, whether implemented in a PDA, mobile telephone, wristwatch, or other form factor.

[**0148**] The flow chart of **FIG. 11** sets forth a method for entering and processing a seizure log according to the invention. Initially, after the patient has indicated a desire to enter seizure log information to the PCU **114** (for example, by entering a command **732**), the seizure log input is received by the PCU **114** or other apparatus (step **1110**). The input is then processed (step **1112**) to determine whether any action is necessary (for example, if the entry indicates or suggests that an emergency is occurring or imminent). If an action is required (step **1114**), some respondent such as the patient's treating physician is alerted (step **1116**, described in greater detail with reference to **FIG. 16**), and if the desired action can be performed locally (step **1118**) by the device receiving the seizure log entry, then the action is performed (step **1120**). The desired action can be preprogrammed into the PCU **114**, received from a remote location such as the database **222**, or directed by a physician or other individual at a remote location (e.g. operating a remote programmer **220** or other device connected to the communications network **112**). Examples of possible local actions include providing an audio or visual alert to the patient, providing instructions to the patient, or requesting the input of further information.

[**0149**] If the action cannot be performed locally (step **1118**), a command representative of the action is relayed (step **1122**) via the communications network **112** to another network unit capable of carrying out the command. For example, the implantable device **110** might be commanded to switch into a different detection mode, apply different types of therapy, delivery an audio or somatosensory warning to the patient, or go inactive. Other devices, such as the programmer **216** or a remote programmer **220** might provide an alert to a physician. Many other options are possible and will be apparent to the reader hereof.

[**0150**] In any event, regardless of whether an action is required (step **1114**), the input is stored (step **1124**) for later retrieval. If there is more information to be received (step **1126**), the PCU **114** will receive and process whatever else is provided by the patient or operator (starting again at step **1110**). Otherwise, the records of the PCU **114** are updated (step **1128**), and the input is acknowledged (step **1130**) to the patient or user.

[**0151**] While the PCU **114** is described above as the apparatus best suited for seizure log entry, it should be noted that the base unit **210**, the programmer **216**, or any other network unit according to the invention can be provided with the same functionality, for use by the patient, a caregiver, or a clinical professional. In any event, upon upload (**FIG. 8**), the seizure log and associated information will be transferred to the database **222** and analyzed if necessary.

[**0152**] It is also desirable in some circumstances to be able to administer surveys and examinations to patients and their caregivers. Traditionally, this has required an office visit to allow the survey or exam to be administered under controlled conditions. However, it will be recognized that a system according to the invention affords on opportunity for automated and remote administration of surveys and examinations.

[**0153**] One clinically useful tool is a quality of life ("QOL") survey, which in general is used to determine how well a patient is doing. Several specific QOL surveys are common in epilepsy treatment, including the QOLIE series (Quality Of Life In Epilepsy), which has a short version (QOLIE-10), a medium-length version (QOLIE-31), and a long version (QOLIE-89). For more information on QOLIE-10, see J. A. Cramer et al., "A Brief Questionnaire to Screen for Quality of Life in Epilepsy: The QOLIE-10," Epilepsia 37(6): 577-582 (1996). For details on QOLIE-31, see J. A. Cramer et al., "Development and Cross-Cultural Translations of a 31 -Item Quality of Life in Epilepsy Inventory," Epilepsia 39(1): 81-88 (1998); and B. G. Vickrey et al., Quality of Life in Epilepsy QOLIE-31 (version 1.0): Scoring Manual and Patient Inventory. Santa Monica, Calif.: RAND (1993). For more information on QOLIE-89, see O. Devinsky et al., "Development of the Quality of LIfe in Epilepsy Inventory," Epilepsia 36(11): 1089-1104 (1995); and B. G. Vickrey et al., Quality of Life in Epilepsy QOLIE-89 (version 1.0): Scoring Manual and Patient Inventory. Santa Monica, Calif.: RAND (1993). Other surveys are also available, both epilepsy-specific (e.g. the ESI-55, see B. G. Vickrey et al., "A Health-Related Quality of Life Instrument for Patients Evaluated for Epilepsy Surgery," Med. Care 30: 299-319 (1992) and the Washington Psychosocial Seizure Inventory (WPSI)) and general (e.g. the SF-36 and SF-12 short forms), and ad hoc surveys and questionnaires might be employed to advantage.

[**0154**] It is also advantageous to be able to administer various neuropsychiatric examinations automatically, remotely, or through a system according to the invention. Neuropsychiatric examinations might be useful for epilepsy patients and others being treated with an implantable medical device according to the invention. See, e.g., T. Onuma, "Classification of Psychiatric Symptoms in Patients with Epilepsy," Epilepsia 41(Suppl. 9): 43-48 (2000); F. Lopez-Rodriguez et al., "Personality Disorders Among Medically Refractory Epileptic Patients," J. Neuropsychiatry Clin. Neurosci. 11(4): 464-69 (Fall 1999); and V. M. Neppe et al., "Modern Perspectives on Epilepsy in Relation to Psychiatry: Behavioral Disturbances of Epilepsy," Hosp. Community Psychiatry 39(4): 389-96 (April 1998). One example of a neuropsychiatric examination that might be administered through a system according to the invention is the Screening Cerebral Assessment of Neppe (the "BROCAS SCAN"). See V. Neppe et al., "The Application of the Screening Cerebral Assessment of Neppe (BROCAS SCAN) to a

Neuropsychiatric Population," J. Neuropsychaitry Clin. Neurosci. 4(1): 85-94 (Winter 1992). It should be understood that the BROCAS SCAN would advantageously be modified to reduce its reliance on direct clinician-to-patient interactions and subjective analysis of responses; or alternatively, a real-time or deferred link between the patient's PCU 114 and a clinican (at a remote programmer, for example) can be established to permit such interactions and analysis.

[**0155**] An advantageous method for administering a survey or examination is detailed in **FIG. 12**. Initially, if a survey or exam is administered on a certain schedule **734** (**FIG. 7**), the patient or user is notified that it is time to respond to the desired survey or examination (step **1210**). A quality of life survey might be administered every three months, for example, but other surveys and exams might be sought either more or less frequently. The schedule used may depend on clinical circumstances, for example the nature of the patient's seizure log entries.

[**0156**] If the patient responds to the notification (step **1212**), the survey or examination is administered (step **1214**) and the results are stored (step **1216**) for later retrieval. Optionally, the results can immediately be transmitted to another location, such as one of the remote programmers **220** or the database **222**. If the patient does not respond (step **1212**), a deadline for response is checked (step **1218**), and a patient reminder is scheduled (step **1220**) if the deadline has not yet passed. If the deadline has passed or is imminent (step **1218**), a message is sent (step **1222**) to an appropriate individual or location (such as the treating physician or clinic) and records are updated (step **1224**). In response, the treating physician can take whatever action is clinically indicated, such as rescheduling the survey or examination, or alternatively summoning the patient in for an office visit (e.g. via the message mechanism of the invention described with reference to **FIG. 17**). Upon upload (**FIG. 8**), the survey or examination results will be transferred to the database **222** and analyzed if necessary.

[**0157**] Many of the operations performed by an interactive system according to the invention are initiated by way of a command **732** (**FIG. 7**) entered at one of the network units. As the term is used herein, a command can refer to a specific directive to perform an action, or can be a direct or indirect consequence of any user-initiated action, such as entering data, pushing a button, speaking a phrase into the microphone **138** (**FIG. 1**), docking the PCU **114** into the docking station **128**, etc. A command can be initiated or received at any of the network units described herein, including the implantable device **110** (e.g., by using a magnet or other interaction device), the PCU **114**, the base unit **210** or the mobile base unit **214**, the programmer **216**, the personal computer **218**, or one of the remote programmers **220**. There are numerous other possibilities, any of which can constitute a command according to the invention.

[**0158**] A command can be processed according to the method illustrated in **FIG. 13**. Initially, the command is received by a device (step **1310**), which for the illustrative example provided here shall be the PCU **114**. If the command can be executed locally (step **1312**), the corresponding action is performed (step **1314**). As described herein, there are many possible and desirable actions, including sending messages, storing information, changing modes, etc. If the command cannot be executed locally (step **1312**), it is relayed to the network unit capable of performing the desired action (step **1316**). The system's records are then updated (step **1318**) to reflect the command and any action performed, and the command is acknowledged to the user (step **1320**).

[**0159**] It may be necessary in the operation of a system according to the invention to alert a user (such as a patient, caregiver, or physician) to a condition or event that requires urgent attention. The flow chart of **FIG. 14** provides an exemplary method for receiving and handling such alerts.

[**0160**] When an alert is received (step **1410**) at any network unit, typically from the communications network **112**, the implantable device **110**, or some other communications channel, it is immediately processed (step **1412**) to determine what actions are required. If the alert can be delivered locally (step **1414**) to the user, the alert is immediately delivered (step **1416**). In general, an alert can be an audio, visual, or somatosensory warning, a message, or some other form of communications. If the alert cannot be delivered locally (step **1414**), it is relayed (step **1418**) to the destination network unit.

[**0161**] If the alert requires are response (step **1420**), the response is awaited (step **1422**) for a desired period of time, either preset or programmed. If a response is received (step **1424**), it is stored (step **1426**) for later retrieval or immediate transmission as a message (see **FIG. 16**). The system's records are then updated (step **1432**) to reflect successful delivery of the alert, regardless of whether a response was required. If no response is received (step **1424**), a message is sent (step **1428**; see **FIG. 16**) to a physician, caregiver or other individual capable of following up on the alert. The destination of the message may depend on the nature of the alert. The system's records are then updated (step **1430**) to reflect the successful delivery of the alert and the user's failure to respond.

[**0162**] An alert provided according to the method illustrated in **FIG. 14** can be provided to the patient (preferably via the implantable device **110** or the PCU **114**) if the patient is in the best situation to respond to the alert, or to a caregiver (preferably via the PCU **114** or the base unit **210**) if the caregiver is best situated. It is also contemplated that in certain circumstances an alert can be provided to both the patient and a caregiver. Depending on the recipient's role, the information provided by the alert may differ. For example, a patient might be instructed simply to seek immediate care, while a caregiver might be given more detailed instructions on how to handle the urgent condition the alert pertains to. The different levels of information may be preset and dependent only on the recipient's general role, patient or caregiver, or may be individually programmed depending on the circumstances and the clinical needs of different patients.

[**0163**] **FIG. 15** illustrates an exemplary method used to associate notes and other data entries with data recorded by the implantable device. This functionality can be used by the patient to enter notes that correspond to stored EEG data (although the seizure log of **FIG. 11** can be used similarly), or simply to explain circumstances that might correspond to other measurements or data items stored by the implantable device **110**, PCU **114**, or other apparatus according to the invention. Initially, the patient or other user enters a notation

(step **1510**), which is received by the device being used (typically the PCU **114**). The notation is then processed (step **1512**), e.g. by compressing it if necessary and assigning it a date and time stamp. The notation is then associated and stored with any desired data (step **1514**), for example stored EEG records, diagnostic information, seizure log entries, QOL survey entries, etc.—the data to associate the notation with can preferably be selected by the user, or by default, can be given a date and time stamp and simply stored with all data. The system's records are then update to reflect the notation (step **1516**), and the entry of the notation is acknowledged to the user (step **1518**). In an embodiment of the invention, any notations entered via the method specified in **FIG. 15** are uploaded with other data according to the flow chart of **FIG. 8**.

[**0164**] As referenced above, **FIG. 16** depicts an illustrative method for sending messages from one apparatus to another in a system according to the invention. A message (text, audio, image, or any other format) is input by a user (step **1610**) and received by the sending device. Typically, in a system according to the invention, the sending device will be the PCU **114**, the base unit **210** or mobile base unit **214**, the programmer **216**, or the personal computer **218**. The message is then processed (step **1612**) to identify its urgency and destination and to package the message for transmission.

[**0165**] In an embodiment of the invention, the sending device is adapted to encrypt the message while processing it (step **1612**), thereby enabling commercial transactions involving financial data and the like. For example, if the patient is alerted that a certain medication change is necessary, the user would be able to send an encrypted message (with credit card or insurance coverage information) to a nearby pharmacy to have the prescription filled and paid for. It should be noted that encryption is useful in a broad array of contexts within a system according to the invention, and in an embodiment of the invention, essentially all communications across the communications network **112** or via wireless links will be encrypted to preserve the patient's privacy and security. It should be noted that certain communications protocols, such as the IEEE 802.11b protocol for wireless communications, include encryption; a system according to the invention can either employ the provided encryption or alternatively specifically encrypt the data (potentially enabling even greater security), depending on the needs of the system.

[**0166**] The message is transmitted to its destination (step **1614**), either directly or indirectly, typically via the communications network **112**, although shorter-range communications links may be used for local devices.

[**0167**] If necessary, the message is associated with any data it might be relevant to (step **1616**; see also **FIG. 15**), and system records are updated accordingly to reflect the transmitted message (step **1618**). Successful transmission of the message is then acknowledged to the user (step **1620**).

[**0168**] If a reply to the message was requested (step **1622**), a reply is awaited for a time period that can be either preset or programmed (step **1624**). When a reply is received, it is associated in device storage with the original message (step **1626**) and displayed to the user (step **1628**).

[**0169**] It should be noted that in an embodiment of the invention, traditional Internet e-mail can also be used to send messages (**FIG. 16**) and alerts (**FIG. 14**) to patients and other individuals; such communications need not be transmitted over the infrastructure established by the invention.

[**0170**] The technique used to process received messages is illustrated by the flow chart of **FIG. 17**. When a message is received (step **1710**) from the communications network **112** or some other source, such as a local device, the recipient is immediately notified (step **1712**). If a reply was requested (step **1714**), entry of the reply is awaited (step **1716**) for a preset or programmable time period. If a reply is entered (step **1718**), it is transmitted back to the original message sender (step **1720**), and system records are updated to reflect the message and the reply (step **1722**). If no reply was requested, the records are updated (step **1722**) to reflect only the original message.

[**0171**] If a reply was requested (step **1714**) and no reply was entered (step **1718**), it is determined whether a deadline has passed (step **1724**). If the deadline has passed, an automatic reply is sent (step **1726**) and the system's records are updated accordingly (step **1728**). The original message sender may then decide how to follow up on the failure to reply. If the deadline has not passed (step **1724**), a reply reminder is simply scheduled (step **1730**). It should be noted that the reply reminder, like other scheduled events handled according to the invention, causes an action to be performed at a certain time according to the specified schedule **734** (**FIG. 7**). Accordingly, at the proper time, the scheduled event is treated essentially as a command according to the method of **FIG. 13**, and can be performed locally or remotely, depending on the circumstances.

[**0172**] Particularly in initial patient care for the treatment of epilepsy and other neurological disorders, it is useful to be able to monitor a patient's condition in substantially real time. This can be performed by an invasive surgical process to implant monitoring electrodes within the patient's cranium, and can also be performed non-invasively with scalp electrodes (which tend to have some disadvantages in comparison to implanted electrodes). However, it will be recognized that if an implantable device **110** is already implanted in the patient and receiving data from implanted electrodes, it is far preferable to be able to monitor that data instead of using either of the alternate approaches.

[**0173**] Accordingly, **FIG. 18** represents a method for performing real-time monitoring of patient condition (including real-time EEG monitoring) according to the invention. As described above, the implantable device includes a number of electrodes, an electronics package capable of translating the EEG signals received by the electrodes into digital data, and a communications capability. The method of **FIG. 18** uses those capabilities for real-time monitoring.

[**0174**] Initially, a data link is established between the implantable device **110** and the apparatus being used for monitoring (step **1810**). Generally, the monitoring apparatus will be the programmer **216** or one of the remote programmers **220**. If a remote device is used, an indirect communications link may be necessary through a local device (such as the PCU **114** or the base unit **210**) and the communications network **112**; other aspects of the method operate in the same way.

[**0175**] Upon a specified, programmed, or commanded start time (step **1812**), the implantable device **110** collects

some data (step **1814**) and transmits it in a relatively small packet or short stream to the monitoring apparatus (step **1816**). The monitoring apparatus then acts on the data, e.g. by decompressing it, displaying it as a real-time EEG waveform, and storing it. If the real-time monitoring is finished (step **1820**), then the data link is closed (step **1822**) and the end of monitoring is acknowledged (step **1824**) to the patient and the user of the monitoring apparatus (e.g., by a message handled according to **FIG. 16** or by some other mechanism). If the monitoring is to continue (step **1820**), then the data collection, transmission, and action steps (**1814-1818**) are repeated as long as desired. It should be observed, of course, that real-time monitoring can be performed only while a communications link is open between the implantable device **110** and other devices. Accordingly, when short-range wireless links are employed, it may be necessary to keep the wand **428** in close proximity to the implantable device **110** for a substantial amount of time.

[**0176**] To ensure a system according to the invention is operating properly, it is necessary to be able to perform diagnostics. And in an interactive system according to the invention, it is advantageous to be able to ensure abnormal diagnostic results are sent to and reviewed by the individuals who most need to see them. A method for accomplishing this is illustrated in **FIG. 19**.

[**0177**] To start the method, a diagnostic test is performed (step **1910**) upon command, schedule, or automatically identified need. If the outcome of the test is abnormal (step **1912**), and the user needs to be alerted (step **1914**), then an alert is provided to the user (step **1916**) according to the method described above with reference to **FIG. 14**. Even if the user does not need to be alerted (step **1914**), there may be a need to alert others (step **1918**), such as a caregiver, physician, and in the case of a malfunction, the device's responsible technical and clinical personnel. If so, an alert is sent to an appropriate one of these individuals (step **1920**), and if still others need to be alerted (step **1922**), additional alerts are sent (step **1920**) as necessary. These third-party alerts can be sent as urgent messages according to the method of **FIG. 16**, for example.

[**0178**] Once the user and any others have been alerted, the device failing diagnostics attempts to respond (step **1924**) and correct the situation. Various actions can be taken here that would depend on the clinical and technical circumstances; however, as a fail-safe, the implantable device **110** (or other apparatus failing diagnostic testing) can be put into an inactive or passive monitoring state until further testing, possibly at a physician's office or other medical facility, can be performed. In any event, system records are updated (step **1926**) to reflect the failed diagnostic test, any alerts sent, and any actions performed to attempt to rectify the situation.

[**0179**] In an alternative embodiment of the invention, the device performing diagnostics need not "know" that a diagnostic test has failed. In this embodiment of the invention, diagnostics results are transmitted to a processing device (such as the programmer **216** or the database **222**) via a message (see **FIG. 16**) or data upload (**FIG. 8**); the processing device then evaluates the results and initiates any alerts or corrective measures necessary.

[**0180**] It should be noted that the method described above for performing diagnostics applies equally to any of the devices used in a system according to the invention, including the implantable device **110**, the PCU **114**, the base unit **210**, the mobile base unit **214**, the programmer **216** (or one of the remote programmers **220**), the personal computer **218**, or the database **222**.

[**0181**] A patient or user having access to the PCU **114** or other network units according to the invention may have a need to access certain informational records from time to time. For example, a patient while traveling might have an urgent need to identify a nearby physician who has one of the remote programmers **220**. The patient might also desire to review a user's guide or other documentation relevant to the implantable device **110** or the system. The volume of information preferably made available to a patient or other user might exceed the amount of storage practically available on the PCU **114** or other accessible device, or may be updated from time to time. Accordingly, there is a need for functionality enabling access to a wide variety of informational materials, regardless of where they may be located in a system according to the invention.

[**0182**] It should further be observed that a physician or other clinical professional using the programmer **216** or another apparatus may have analogous needs—e.g., to identify other nearby clinical professionals and facilities, to access instructions or updated documentation, or to access a new patient's medical history. A query processing capability is provided by a system according to the invention and will be described with reference to **FIG. 20**.

[**0183**] Initially, query input is accepted from the user (step **2010**). This can be accomplished via a navigable menu tree presented on a display, various drop-down lists of preset query choices, or free-form text entry, as desired. If the query can be handled locally (step **2012**), e.g., if a physician query is entered into the PCU **114**, and a list of physicians is maintained on the PCU **114**, then the query is processed (step **2014**) and interpreted, and the local data repository is accessed (step **2016**) to find a response. A report representing the results (e.g., one or more matching records from the repository) is then generated (step **2018**). It will be recognized that it may be necessary to update the contents of the local data repository from time to time; this can be accomplished by a method analogous to the software download described with reference to **FIG. 9**—the contents of the data repository can be considered a type of software module that needs to be updated periodically, and such an update can be scheduled or commanded as desired.

[**0184**] If the query cannot be handled locally (step **2012**), the query is transmitted (step **2020**) to the database **222** or another location where it can be handled. Results are generated at the remote location while the queried apparatus awaits receipt of the results (step **2022**).

[**0185**] Upon receipt from a remote location (step **2022**), or upon local generation (step **2018**), the results are presented to the user (step **2024**) by visual display, audio code or speech synthesis, or any other suitable means (including the message transmission operation of **FIG. 16**).

[**0186**] A basic device housekeeping method consistent with the invention is illustrated by the flow chart of **FIG. 21**. Because a substantial amount of data is stored, transferred, processed, and manipulated in a system according to the invention, there may be, from time to time, old or superseded data that should be discarded or backed up to keep the

system operating at maximum efficiency. The process described herein can be applied to one or more network units (such as the implantable device **110**, the PCU **114**, the base unit **210**, the mobile base unit **214**, the programmer **216** or remote programmers **220**, the personal computer **218**, or the database **222**), individually or in a coordinated effort.

[**0187**] The process begins by identifying any unnecessary data (step **2110**) in a device according to the invention. The unnecessary data, which is typically described as that data which is not necessary for any purpose whatsoever, is deleted (step **2112**). Any old data, not referenced recently or unlikely to be used, is then identified (step **2114**) and backed up (step **2116**), typically on the database **222**. The original copy of the old data is then deleted (step **2118**). The backup copy of the old data is still available if it is needed. Storage, including both short-term memory and long-term archival, is consolidated and organized (step **2120**), preferably keeping like data together and maximizing contiguous free space.

[**0188**] As illustrated in **FIG. 7**, the performance of certain actions according to the invention first requires authentication of a user (step **716**) or a device serving as the action's source (step **718**). Such user authentication is preferably performed in accordance with the methods described below and with reference to **FIG. 22**; device authentication is analogous and will be described in further detail below.

[**0189**] The process begins by identifying a user (step **2210**). In general, this is accomplished by providing an identification data item to an authentication server, which may be on the local device, the database **222**, or elsewhere connected to the communications network **112**. Examples of identification data items include user login names, numeric codes representative of the user's identity, and biometric information; there are numerous other possibilities.

[**0190**] If the user has already authenticated to the system (step **2212**), and too much time has not yet elapsed (step **2214**), the desired transaction is allowed (step **2216**). The preset or programmable time limit exists to allow consecutive (and nearly consecutive) transactions to be performed without the need to perform detailed authentication for each one, relieving some burden on the system. This approach is well known.

[**0191**] If the user has not yet authenticated (step **2212**) or if too much time has elapsed (step **2214**), then an authentication input is awaited from the user (step **2218**). An authentication input according to the invention can be a password, a device-generated code, one or more items of biometric information, or any of various other known items. Once received, the authentication input is tested (step **2220**) by the authentication server. If it is good (step **2222**), and the user identification and user authentication information match properly, then the transaction is allowed (step **2216**). If not, and one or more retries are allowed (step **2224**), then authentication input is again awaited (step **2218**) and the process continues. If no retries are available (step **2224**), then a failure message is sent (step **2226**) to one or more responsible individuals (for example, the patient, the patient's physician, and a system administrator) or a failed access attempt is simply logged, and the transaction is denied (step **2228**).

[**0192**] Finally, a method for ensuring patients and other users do not overuse the interactive functionality of a system according to the invention is presented in **FIG. 23**. It has been observed that certain patients with programmable implantable medical devices tend to use interaction devices more often then recommended. This may lead to accelerated battery depletion, inefficient system usage, and may make other unnecessary demands on the system. The control method provided by the system and illustrated in **FIG. 23** will reduce this tendency by limiting access to reasonable intervals.

[**0193**] To start, the system identifies the user making a request (step **2310**) and further identifies the nature of the action being requested (step **2312**). For example, a given user may tend to try to upload stored data very frequently, e.g. approximately every half hour while awake. Accordingly, after the user and the desired action have been identified, the system identifies a time restriction that corresponds to both the user and the desired action (step **2314**). Some users who use the system appropriately might have no time restrictions, while others might have multiple restrictions applying to multiple actions. The time restrictions used by the system can be preset, programmed, commanded (e.g. by a physician), or dynamically and automatically generated and updated by the system based on past behavior.

[**0194**] Once the appropriate time restriction has been identified, the user's history of interaction with the system, including the most recent action of the same type requested by the user, is accessed (step **2316**) and its time is determined. The current time is checked (step **2316**) and compared to the time of the most recent action of the same type. If the time restriction is met (step **2320**), the action is permitted (step **2322**) and recorded by the system. Otherwise, permission to perform the action is denied (step **2324**).

[**0195**] It should be recognized, of course, that certain actions performed by the system should never be restricted—for example, patients should always be allowed to send urgent messages (see **FIG. 16**) or make a seizure log entry (see **FIG. 11**), and if an urgent message is to be sent, it should be possible for the patient to upload and transmit a corresponding EEG record for analysis (see **FIG. 8**). The system (and the PCU **114** or the implantable device **110**) may not always be able to automatically identify an urgent patient care situation or an emergency, so the patient must be given an opportunity to react to perceived emergencies and seek appropriate care through the use of the system.

[**0196**] It should be observed that while the foregoing detailed description of various embodiments of the present invention is set forth in some detail, the invention is not limited to those details and a system according to the invention incorporating an implantable medical device can differ from the disclosed embodiments in numerous ways. In particular, it will be appreciated that embodiments of the present invention may be employed in many different applications to monitor, communicate with, or control a medical device system. It will be appreciated that the functions disclosed herein as being performed by hardware and software, respectively, may be performed differently in an alternative embodiment. It should be further noted that functional distinctions are made above for purposes of explanation and clarity; structural distinctions in a system or method according to the invention may not be drawn along the same boundaries. Hence, the appropriate scope hereof is deemed to be in accordance with the claims as set forth below.

What is claimed is:

1. An interactive implantable medical device system for monitoring and treating a patient, comprising:

an external interactive computing device adapted for communication over a communications network; and

an implantable device having a communication subsystem adapted for bi-directional communication with the external device;

wherein the external interactive computing device is adapted to receive and store a data item from the patient;

wherein the external interactive computing device is further adapted to associate the data item with a storage record in the interactive computing device; and

wherein the external interactive computing device is further adapted to receive and store a data record from the implantable device.

2. The interactive implantable medical device system of claim 1, wherein the storage record comprises an EEG record received from the implantable device as a data record.

3. The interactive implantable medical device system of claim 1, wherein the storage record comprises a stored timestamp.

4. The interactive implantable medical device system of claim 1, wherein the external interactive computing device comprises a personal control unit.

5. The interactive implantable medical device system of claim 4, wherein the external interactive computing device comprises a portable computing device.

6. The interactive implantable medical device system of claim 5, wherein the portable computing device comprises a personal digital assistant.

7. The interactive implantable medical device system of claim 6, wherein the personal digital assistant comprises:

a wide area communications interface adapted for communications over the communications network; and

a local area communications network adapted for communication with the implantable device.

8. The interactive implantable medical device system of claim 7, wherein the personal digital assistant further comprises an expansion connector, and wherein the local area communications network comprises an expansion module attached to the expansion connector.

9. The interactive implantable medical device system of claim 1, wherein the data item comprises an entry in a seizure log.

10. The interactive implantable medical device system of claim 1, wherein the data item comprises a response to a query.

11. The interactive implantable medical device system of claim 10, wherein the query comprises a quality of life survey.

12. The interactive implantable medical device system of claim 10, wherein the query comprises a neuropsychiatric examination.

13. An interactive implantable medical device system for monitoring and treating a patient, comprising:

an external computing device adapted for communication over a data link; and

an implantable device having a communication subsystem adapted for bi-directional communication with the external computing device;

wherein the external computing device is adapted to receive and store a data item from the patient and to transmit the data item to a database.

14. An interactive implantable medical device system for monitoring and treating a patient, comprising:

an external interactive computing device adapted for communication over a communications network;

an implantable device having a communication subsystem adapted for bi-directional communication with the external device; and

a remote computing device adapted for communication over the communications network with the external interactive computing device;

wherein the remote computing device is adapted to receive a data item from the implantable device via the external interactive computing device, to process the data item, and to program the implantable device with a parameter derived at least in part from the data item.

15. The interactive implantable medical device system of claim 14, wherein the implantable device is adapted to apply a therapy in response to a detected event.

16. The interactive implantable medical device system of claim 15, wherein the therapy comprises electrical brain stimulation.

17. The interactive implantable medical device system of claim 15, wherein the detected event is identified by the implantable device based on the parameter.

18. A method for using an interactive implantable medical device system to monitor and treat a patient, the method comprising the steps of:

receiving a data item input from the patient with an external device;

storing the data item in the external device;

associating the data item with an existing storage record in the external device;

receiving a data record from an implantable device with the external device; and

storing the data record in the external device.

19. The method for using an interactive implantable medical device system of claim 18, wherein the existing storage record comprises an EEG record received from the implantable device.

20. The method for using an interactive implantable medical device system of claim 18, wherein the existing storage record comprises a stored timestamp.

21. The method for using an interactive implantable medical device system of claim 18, wherein the data item comprises an entry in a seizure log.

22. The method for using an interactive implantable medical device system of claim 18, wherein the data item comprises a response to a query.

23. The method for using an interactive implantable medical device system of claim 22, wherein the query comprises a quality of life survey.

24. The method for using an interactive implantable medical device system of claim 22, wherein the query comprises a neuropsychiatric examination.

25. A method for upgrading a software program in an interactive implantable medical device system, the method comprising the steps of:

transmitting a new software program from a repository to an intermediate device;

awaiting a connection between a target device and the intermediate device;

sending the new software program from the intermediate device to the target device;

verifying the correctness of the new software program; and

if the new software program is correct, replacing an old software program with the new software program in the target device.

26. The method for upgrading a software program in an interactive implantable medical device system of claim 25, wherein the intermediate device is a personal control unit

27. The method for upgrading a software program in an interactive implantable medical device system of claim 25, wherein the intermediate device is a programmer.

28. The method for upgrading a software program in an interactive implantable medical device system of claim 25, wherein the target device is an implantable neurostimulator.

29. A method for programming a target device in an interactive implantable medical device system, the method comprising the steps of:

awaiting a connection between the target device and a programming device;

sending a new parameter set from the programming device to the target device;

programming the new parameter set into the target device; and

updating a record in a database.

30. The method for upgrading a software program in an interactive implantable medical device system of claim 29, further comprising the steps of:

retrieving an old parameter set from the target device; and

modifying the old parameter set to obtain the new parameter set.

31. The method for upgrading a software program in an interactive implantable medical device system of claim 29, wherein the programming device is a personal control unit

32. The method for upgrading a software program in an interactive implantable medical device system of claim 29, wherein the programming device is a programmer.

33. The method for upgrading a software program in an interactive implantable medical device system of claim 29, wherein the programming device is the database.

34. The method for upgrading a software program in an interactive implantable medical device system of claim 29, wherein the target device is an implantable neurostimulator.

35. A method for avoiding overuse of interactive capabilities of an interactive implantable medical device system, the method comprising the steps of:

receiving a command input from a user;

verifying the identity of the user;

identifying the command input and associating the command input with a desired action;

accessing a history of command inputs from the user;

determining whether the action should be allowed based on the desired action, the history of command inputs, and a time of the command input; and

if the action should be allowed, performing the action.

36. The method for avoiding overuse of claim 35, wherein the step of determining whether the action should be allowed comprises querying a database.

37. A method for synchronizing an acting device in an interactive implantable medical device system with a database, the method comprising the steps of:

performing an action with the acting device;

storing a data representation of the action in the acting device;

awaiting a connection between the acting device and the database; and

transmitting the data representation of the action to the database.

38. The method for synchronizing an acting device with a database of claim 37, wherein the acting device comprises an implantable neurostimulator.

39. The method for synchronizing an acting device with a database of claim 38, wherein the connection between the acting device and the database is an indirect link.

40. A method for using an interactive implantable medical device system in a deferred mode, the method comprising the steps of:

identifying a data item to transmit from a source device to a destination device;

awaiting a connection between the source device and the destination device;

if the connection is available, performing an action and transmitting the data item from the source device to the destination device; and

if the connection is not available, performing a conditional action and queueing the data item for later transmission.

41. The method for using an interactive implantable medical device system in a deferred mode of claim 40, wherein the source device comprises an implantable neurostimulator.

42. The method for using an interactive implantable medical device system in a deferred mode of claim 40, wherein the destination device comprises a database.

43. The method for using an interactive implantable medical device system in a deferred mode of claim 40, wherein the action comprises a commanded action desired by a user, and wherein the conditional action comprises at least a portion of the commanded action.

44. The method for using an interactive implantable medical device system in a deferred mode of claim 43, further comprising the step of receiving the data item from the user, wherein the data item comprises an authentication input from the user.

45. A method for using an interactive implantable medical device system to interrogate an implantable device and synchronize with a database, the method comprising the steps of:

awaiting a connection between the implantable device and an intermediate device;

transferring operation data between the implantable device and the intermediate device;

storing a data item in the intermediate device representative of the operation data;

awaiting a connection between the intermediate device and the database; and

transmitting the data item from the intermediate device to the database.

46. The method for using an interactive implantable medical device system of claim 45, wherein the implantable device comprises an implantable neurostimulator.

47. The method for using an interactive implantable medical device system of claim 46, wherein the operation data comprises a stored EEG record.

48. The method for using an interactive implantable medical device system of claim 46, wherein the operation data comprises a parameter set.

49. The method for using an interactive implantable medical device system of claim 46, wherein the operation data comprises diagnostic results.

* * * * *