Sept. 11, 1934. O. L. BARD 1,973,276

VEHICLE ADVERTISING DISPLAY APPARATUS

Filed Feb. 6, 1934

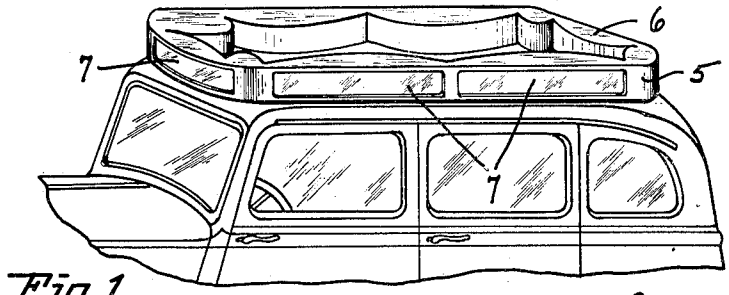

Fig. 1

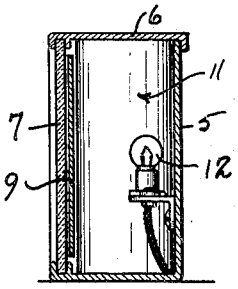

Fig. 3

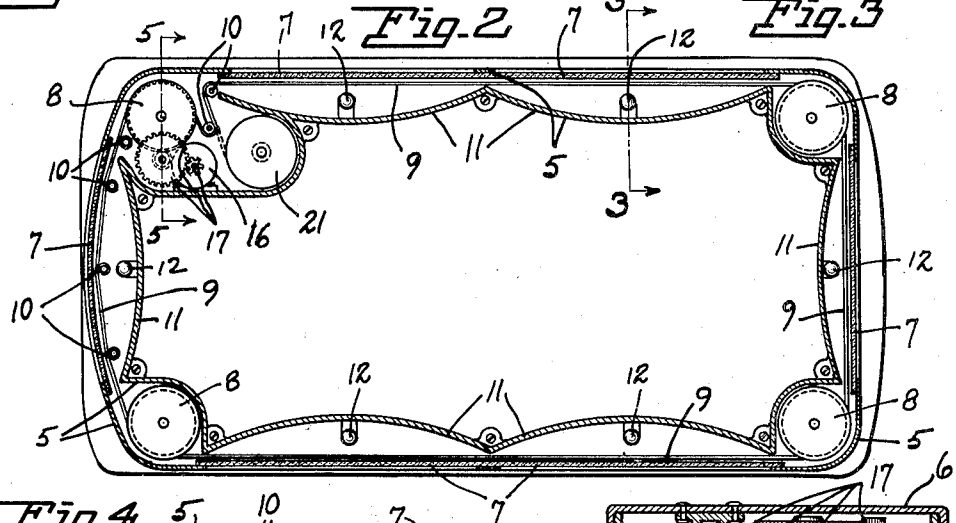

Fig. 2

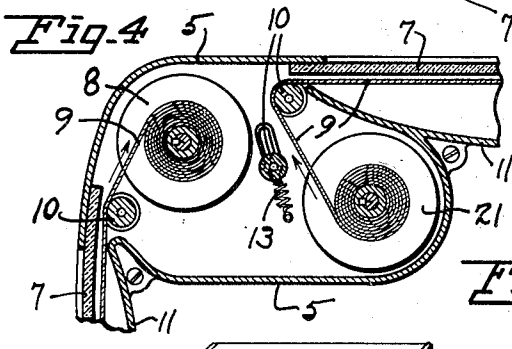

Fig. 4

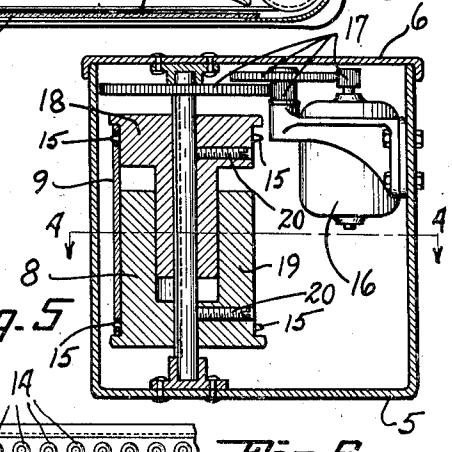

Fig. 5

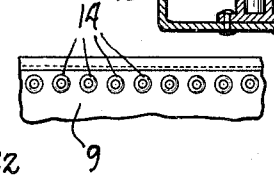

Fig. 6

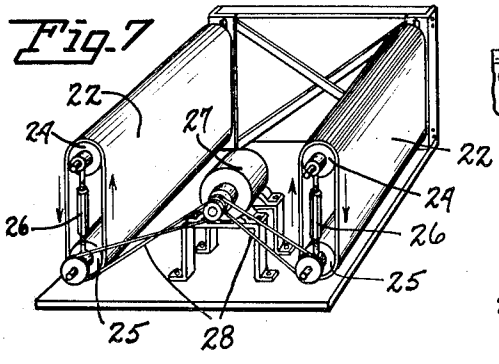

Fig. 7

Inventor

Otis L. Bard

By Glenn L. Fish

Attorney

Patented Sept. 11, 1934 1,973,276

UNITED STATES PATENT OFFICE

1,973,276

VEHICLE ADVERTISING DISPLAY APPARATUS

Otis L. Bard, Spokane, Wash.

Application February 6, 1934, Serial No. 709,946

2 Claims. (Cl. 40—32)

My invention relates to vehicle advertising display apparatus and certain objects of the invention are to provide a display apparatus comprising a belt for carrying advertisements and means for rotating the belt together with means whereby either an endless belt or a belt that is not endless may be used. Further objects are to provide guide means and means for preventing slack in the belt, means for illuminating the belt, and adjusting means for the belt drums whereby belts of different widths may be used. Still further objects are to provide, in combination with a vehicle, a display apparatus mounted upon the top of the vehicle and carrying advertising matter that is visible through windows from the outside of the vehicle.

With the above and other objects in view which will appear as the description proceeds, the invention consists of the novel construction, adaptation, combination and arrangement of parts hereinafter described and claimed. These objects are accomplished by devices illustrated in the accompanying drawing; wherein:

Figure 1 is a view in perspective showing the apparatus installed on the top portion of a motor vehicle; Fig. 2 is a top plan view of the same with the casing shown in section, and also showing an endless belt means for carrying advertisements; Fig. 3 is a view in transverse vertical section taken substantially on a broken line 3—3 of Fig. 2; Fig. 4 is a view in horizontal section through a corner portion of the apparatus showing the drum means whereby the belt is wound upon one drum and transferred to another; Fig. 5 is an enlarged view in vertical section showing the power means for rotating the belt and taken on a broken line 5—5 of Fig. 2; Fig. 6 is a fragmentary view in elevation showing an edge portion of the belt; and Fig. 7 is a view in perspective showing a modified form of the apparatus.

Referring in detail to the drawing throughout which like reference numerals indicate like parts, the numeral 5 designates a casing that is mounted upon the top of a vehicle and which is provided with a cover 6 and side glass windows 7. Revolubly mounted within each of the four corners of the casing is a drum or spool 8, and an endless belt 9 is mounted on said drums. The belt carries the advertisements and is held close to the windows by the drums and by a plurality of small rollers 10 disposed at curved places, particularly in front where the window is rounded out in convex form. The inside of the casing may be curved inwardly in concave form, as at 11, to provide a plurality of compartments wherein electric lights 12 may be mounted for the purpose of illuminating the advertisements on the belt as will be understood. One of the small rollers 10 may be slidably mounted and provided with a spring, as shown at 13 in Fig. 4, for the purpose of keeping the endless belt stretched tight at all times. This belt is provided with a series of perforations or eyelets along its edges as shown at 14 in Fig. 6, and these perforations engage pins 15 fixed into the end portions of the drums 8, as shown in Fig. 5, for preventing the belt from slipping.

The power means for rotating the belt 9 comprises a motor 16 mounted in a corner of the casing 5 adjacent one of the drums 8, and a chain of gears 17 connecting the shaft of said motor with the shaft of said drum as most clearly shown in Fig. 5 of the drawing. The drums may be adjustible and comprise a male member 18 slidably fitting into a female member 19, and set screws 20 whereby said members may be moved closer together or further apart to receive and fit belts of different widths. In case it is desired to use a belt that is not endless, an additional drum, as designated by the numeral 21, may be mounted adjacent the drum 18 that is driven by the motor 16. This additional drum may carry the belt 9 and be installed by removing the cover 6. The end of the belt is then threaded around the drums 8 and small rollers 10 and secured to the drum which is powered by the motor 16 as shown in Fig. 4.

Referring to the modified form of apparatus shown in Fig. 7 of the drawing, two endless belts 22 are each arranged to move vertically instead of horizontally as in the preferred form. These belts may be mounted in the opposite sides of a casing 23 and each supported by an upper roller 24 and a lower roller 25, which rollers are supported by the casing. Turnbuckles 26 may be used for adjusting said upper and lower rollers relative to their distance apart thus preventing slack in the endless belts. A centralized motor 27 and endless cords 28 may lead from a pulley on the motor shaft to a pulley fixed on the lower roller of each belt respectively, and one of said cords may be crossed whereby the endless belts will be caused to rotate in the same direction.

Having thus described my invention, it being understood that minor changes in its construction may be resorted to without departing from the scope and spirit of the invention, what I claim and desire to secure by Letters Patent of the United States is:—

1. The combination with a vehicle, of an advertising display apparatus comprising a casing

mounted upon the top of the vehicle, a plurality of windows for the outside of the casing, a belt mounted for revoluble movement within and around the casing and adjacent the windows, the inside of said casing bulged inwardly opposite said windows to form a plurality of compartments, and illuminating means mounted within said compartments.

2. In a vehicle advertising display apparatus comprising a rectangular casing, a revoluble drum mounted in each corner of the casing, an endless belt disposed around the casing and engaging the drums, power means for rotating one of said drums whereby the belt is caused to move around the casing, another revoluble drum mounted adjacent the drum that is powered whereby an endless belt may be used on the first four mentioned drums, and a belt that is not endless may be wound from the last mentioned drum around three of the named drums and upon the powered drum.

OTIS L. BARD.