2 Sheets—Sheet 1.

G. DUNHAM.

MACHINES FOR MAKING BOLTS.

No. 193,644. Patented July 31, 1877.

Fig 1.

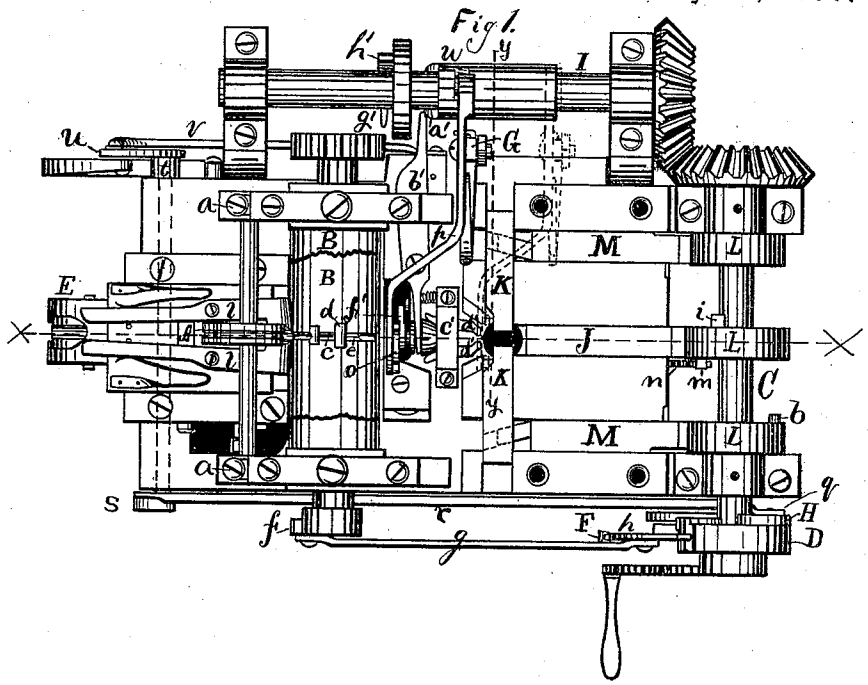

Fig 2.

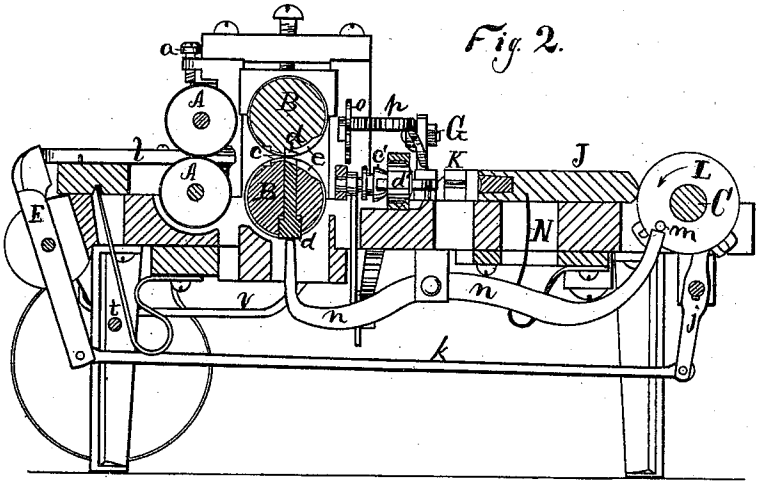

Witnesses.
A. N. Dale
E. S. Burr

Inventor.
George Dunham
By James Shepard Atty.

N. PETERS, PHOTO-LITHOGRAPHER, WASHINGTON, D. C.

2 Sheets—Sheet 2.

G. DUNHAM.

MACHINES FOR MAKING BOLTS.

No. 193,644. Patented July 31, 1877.

Fig. 3.

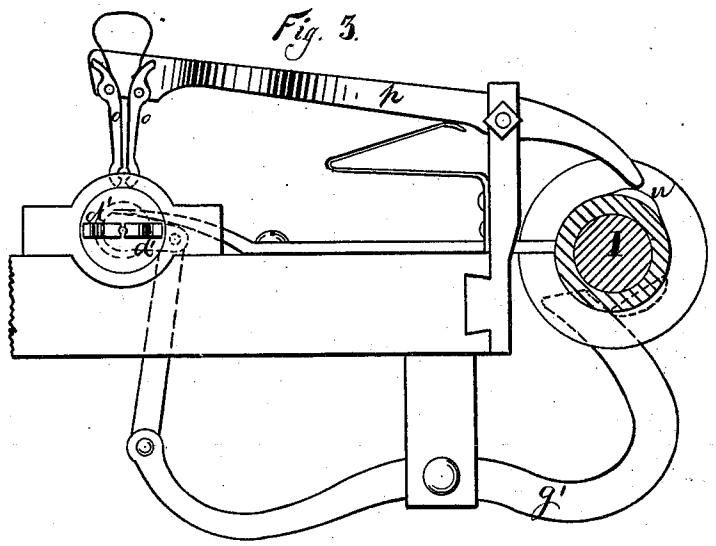

Fig. 4.

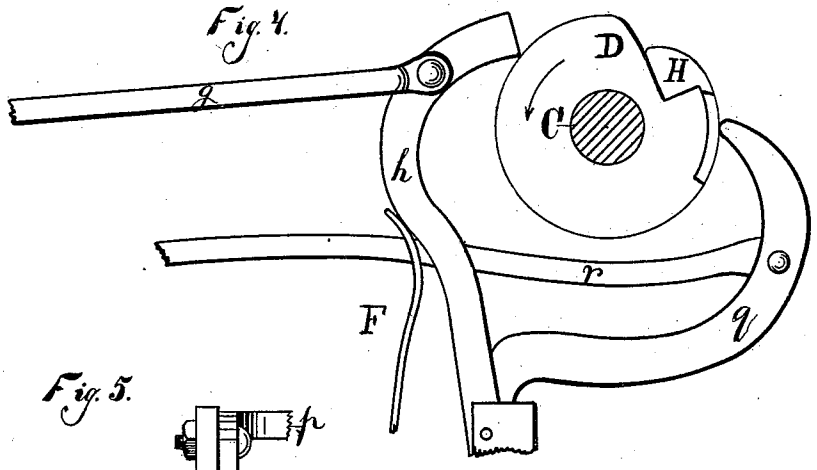

Fig. 5.

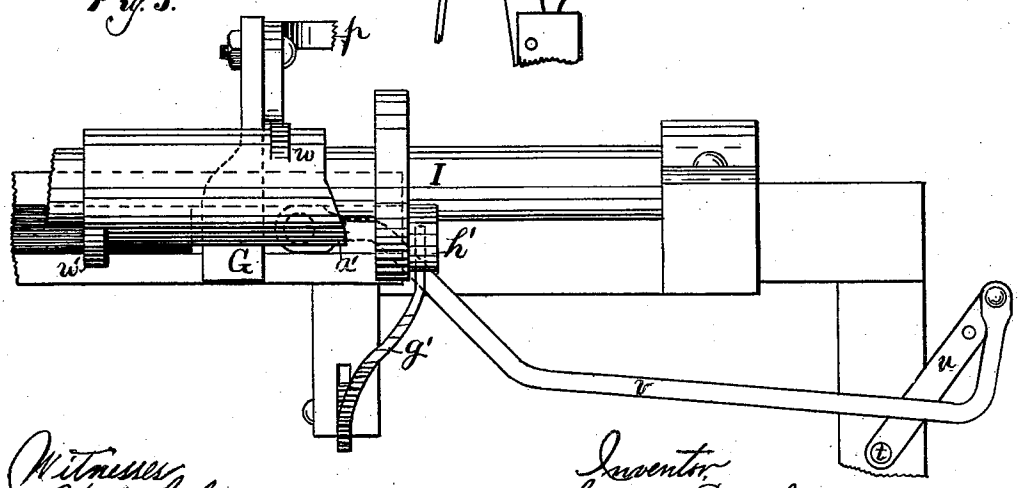

Witnesses,
C. N. Dale
L. S. Burr

Inventor,
George Dunham
By James Shepard Atty.

N. PETERS, PHOTO-LITHOGRAPHER, WASHINGTON, D. C.

UNITED STATES PATENT OFFICE.

GEORGE DUNHAM, OF UNIONVILLE, CONNECTICUT.

IMPROVEMENT IN MACHINES FOR MAKING BOLTS.

Specification forming part of Letters Patent No. **193,644**, dated July 31, 1877; application filed November 15, 1876.

To all whom it may concern:

Be it known that I, GEORGE DUNHAM, of Unionville, in the county of Hartford and State of Connecticut, have invented certain new and useful Improvements in Machines for Making Bolts, of which the following is a specification:

My invention consists of the novel parts and combination of parts as hereinafter fully described.

In the accompanying drawing, Figure 1 is a plan view of a machine for making bolts which embodies my invention, the same being represented with the cap-plate removed and a portion of an upper roller broken away, in order to better show the parts. Fig. 2 is a longitudinal and vertical section of the same, on line *x x* of Fig. 1. Fig. 3 is a transverse section of detached parts of the same, on line *y y* of Fig. 1; and Figs. 4 and 5 are side elevations of detached parts of the same.

The machine is designed for the manufacture of carriage-bolts from round rods of iron; and by bolts, in this connection, I mean the article previous to its being threaded, but having the general form of a bolt—to wit, a round stem, square neck, and rounded head. Other forms of bolts may, however, be produced by my machine by a change in the form of the shaping-dies.

Round rods of the diameter equal to the diameter of the round stem of the bolt to be produced are brought to a proper heat for a portion of their length, and, when hot, a rod is passed into and between the feed-rollers A A, and fed into and between the die-rollers B B. The feed-rollers A A are mounted on suitable shafts, the upper one of which may be adjusted to and from its fellow by means of set-screws *a a*, so that the rod may be forced along by them, and at the same time their hold upon the rod must be such that they can slip thereon and recede to their normal position while the rod is being more firmly griped by other parts of the machine.

The shaft carrying the lower feed-roller has a crank affixed to it, which crank is connected by a pitman to a lever under the main shaft C, said lever being operated by cam *b*, Fig. 1, to impart motion to the feed-rollers A A, and a spring moves said rollers in the opposite direction when released by the cam *b*.

The crank, pitman, lever, and spring which actuate said feed-rollers are not shown in the drawings, as there is nothing specially new in their construction, and any ordinary spring, lever, pitman, and crank that will, in connection with the cam *b*, impart an oscillating motion to the said rollers may be employed; also, any ordinary means for changing the length of the crank to adjust the range of motion of said rollers may be employed.

The die-rollers B B have three operative surfaces or points: first, a griping-surface or dies at *c*; second, a cut-off or shears, *d*; and, third, an angular shaping surface or dies, *e*. These die-rollers are hung in a suitable frame, and one of them (in the present case the lower one) is provided with a crank, *f*, Fig. 1, connected by pitman *g* to lever *h*, which bears on cam D, whereby an oscillating movement is imparted to the die-rollers B B, they being connected at one end by means of suitable gear-wheels.

The form of the cam D is clearly shown in Fig. 4, in which it will be seen that a greater portion of it is concentric, so that the die-rollers may rest while said concentric portion is passing the lever *h*. The cam also has two depressions in it, one deeper than the other, and both formed with a radial side, which radial sides move toward the lever *h*, as indicated by the dart in Fig. 4, and constitute the actuating portions of the cam.

The angular shaping-dies *e* of the die-rollers are of such size that the rod, before upsetting, may be passed through them, and they are so placed in the die-rollers that when the lever *h* strikes the concentric bottom of the smallest depression in the cam D, a portion of said shaping-dies will be opposite each other, and allow the rod which has not been enlarged or upset to be fed along through them. The feed-rollers A A make a part of their movement when the angular shaping-dies *e* are at this point. The radial side of the smallest depression in cam D then strikes the lever *h*, and throws the die-rollers into a position a little forward of the one shown in Figs. 1 and 2 of the drawing. The feed-roll-

ers about this time force the end of the rod into the griping-dies *e*, so that the rod is drawn along by the die-rollers and firmly griped between them. The cam *i*, Fig. 1, then strikes the lever *j*, which, through pitman *k*, Fig. 2, moves the lever E, the wedge-shaped end of which enters in between the outer end of the upsetting-jaws *l l*, and forces their inner ends together and firmly upon the rod. These jaws *l l* are hung on a sliding carriage, and the further movement of the lever E carries said upsetting-jaws *l l* toward the die-rollers, the rod meantime being griped at two points, so that the portion between the points so griped is upset or enlarged. The cam *m* then strikes the lever *n* and pushes the lower blade of the cut-off or shears *d* up through the lower one of the die-rollers, and cuts off so much of the rod as projects beyond that point. If, however, the rod was properly gaged when put into the machine, but very little, if any, stock would be cut off at the first operation of the shears thereafter.

Soon after the operation of the cut-off, the upsetting-jaws *l l* recede, and the lever *h* falls into the bottom of the largest depression of the cam D, (forced there by the spring F,) and in doing so the die-rollers are thrown backward until the forward ends of the upsetting-dies *e* are directly opposite the forward end of that portion of the rod which has just been upset. The feed-rollers and die-rollers then move forward simultaneously, the former feeding the rod, and the latter shaping the enlarged portion of it into a rudimentary angular neck. When the upset portion has been thus shaped, the die-rollers stop at a point just before the griping-dies *e* take hold of the rod again, the lever *h* rests on the concentric bottom of the smallest depression in cam D, and the feed-rollers continue their movement, feeding the rod a proper length for a blank. When the lever *h* again rides up the radial side of said smallest depression, the end of the rod is again griped in the griping-dies *e*, and the operations before described are repeated; but this time, when the cut-off acts, instead of merely trimming the end of the rod, it cuts off a bolt-blank of the proper length, and with an enlarged or upset portion formed into a rudimentary angular neck; and the operations herein described are repeated for every revolution of the main shaft C, until so much of the rod as is of the proper heat has been operated upon.

Transferring-tongs *o*, attached to a lever, *p*, are secured to a reciprocating carriage, G, the same having motion imparted to it from the main shaft C through cam H, lever *q*, pitman *r*, crank *s*, shaft *t*, crank *u*, and pitman *v*. The said tongs are raised and lowered by means of the shaft I, connected by beveled gearing to the main shaft C, and bearing two cams, *w w'*, which act upon the outer end of the lever *p*, to depress the tongs when the said lever is brought into contact with said cams by the reciprocating movement of the carriage G.

Just before the cut-off acts to sever a blank the tongs are brought toward the die-rollers, and are depressed by the cam *w*, when their beveled noses (see Fig. 3) strike the blank and force the tongs open, allowing them to slip over and take hold upon the blank, they being forced together by means of a proper spring, and when they have thus taken hold the blank is cut off. The cam *w* moves on out from under the lever *p*, when any suitable spring raises said lever, and the cam H, through the means described, carries the carriage G, together with the tongs and blank, to a point over the heading-die J and squaring-dies K K, as indicated by broken lines in Fig. 1. The cam *w'* then strikes the lever *p*, and depresses the tongs *o* until the end of the blank is between the holding and turning jaws *d d*, and while thus depressed the cam *a'* on shaft I comes in contact with lever *b'*, to force the cone *c'* between the outer ends of the holding and turning jaws *d' d'*, and causes them to gripe the blank.

Upon the main shaft C there are three cam-wheels, L L L, on the sides of two of which are the cams *b*, *i*, and *m*, already described. Said cam-wheels, also, have each two peripheral cams, (shown by the side view in Fig. 2,) the smallest projection or cams being on the middle cam-wheel, and the larger ones on the side cam-wheels.

In the bed of the machine there are three longitudinal sliding bars, M J M, the slide J having the heading-die formed in its end, as shown in Fig. 2, and the bars M M having inclined ends or wedges working in slots in the transverse slides, which constitute the neck-squaring dies K K, whereby the longitudinal movement of the bars M actuates the squaring-dies to open and close them. The bars M J M are forced in one direction by the peripheral cams on cam-wheels L L L, and in the opposite direction by springs, one of which is shown at N in Fig. 2.

Just after the tongs deposit the blank in the holding and turning dies the forward projection on the cam-wheels L L L acts to close the neck-squaring and heading dies, and square the neck and form the head, when said parts recede. The holding and turning dies are mounted in a shaft, so that they may be partially rotated, but confined longitudinally, and said shaft is provided with a crank *f'*, Fig. 1, which, through means of a pitman, is connected to a lever, *g'*, and acted upon by cam *h'* on shaft I, to impart to the holding and turning jaws a quarter revolution or turn, and this quarter-turn is given just after the neck-squaring and heading dies have receded from their first action on the blank. The next peripheral projection on the cam-wheels L L L, then, for the second time during the revolution of the shaft C, closes the neck-squaring and heading dies, and gives the bolt its finish-

ing touch, so far as forming it is concerned, when the dies and holding-jaws open and the bolt falls from the machine.

I claim as my invention—

1. The die-rollers, carrying shears and angular shaping-dies, in combination with mechanisms for operating the shears and imparting an oscillating motion to the die-rollers, substantially as described, and for the purposes set forth.

2. The die-rollers carrying angular shaping-dies, shears, and griping dies, substantially as described, and for the purposes set forth.

3. The die-rollers carrying shears and angular shaping-dies, in combination with the feed-rollers, substantially as described, and for the purposes set forth.

4. The combination of oscillating rollers, bearing shears and griping-dies, with the upsetting-jaws and their operating mechanism, substantially as described, and for the purpose set forth.

5. The combination of oscillating rollers, bearing shears, angular shaping-dies, and griping-dies, with upsetting-jaws and feed-rollers, substantially as described, and for the purposes set forth.

6. The combination of shears, angular shaping-dies, griping-dies, and upsetting-jaws, substantially as described, and for the purposes set forth.

7. The combination of angular shaping-dies, griping-dies, upsetting-jaws, and feed-rollers, substantially as described, and for the purposes set forth.

8. The combination of angular shaping-dies, griping-dies, upsetting-jaws, shears, and feed-rollers, substantially as described, and for the purposes set forth.

9. The combination of angular shaping-dies with transferring-tongs and holding and turning jaws, substantially as described, and for the purposes set forth.

10. The combination of upsetting-jaws, griping-dies, angular shaping-dies, shears, and transferring-tongs with mechanism for completing the bolt, substantially as described, and for the purposes set forth.

11. The combination of angular shaping-dies, shears, transferring-tongs, and mechanism for completing the bolt, substantially as described, and for the purpose set forth.

12. The combination of feed-rollers, upsetting-jaws, griping and shaping dies, shears, transferring-tongs, and mechanism for completing the bolt, substantially as described, and for the purposes set forth.

13. The combination of shears, transferring-tongs, holding and turning jaws, and squaring and heading dies, substantially as described, and for the purposes set forth.

14. The combination of holding and turning jaws, mechanism for opening and closing said jaws and giving them a quarter-turn, with neck-squaring and heading dies, substantially as described, and for the purposes set forth.

15. The combination of shears, transferring-tongs, and holding and turning jaws, substantially as described, and for the purposes set forth.

16. The combination of angular shaping-dies, transferring-tongs, holding and turning jaws, and squaring and heading dies, substantially as described, and for the purpose set forth.

17. The combination of angular shaping-dies, shears, transferring-tongs, holding and turning jaws, and squaring and heading dies, substantially as described, and for the purposes set forth.

18. The combination of the feed-rollers, upsetting-jaws, oscillating die-rollers, with squaring and heading dies M J M, substantially as described, and for the purposes set forth.

19. The combination of feed-rollers, die-rollers, bearing griping-dies, shears, and angular shaping-dies, transferring-tongs, holding and turning jaws, and squaring and heading dies, substantially as described, and for the purposes set forth.

GEORGE DUNHAM.

Witnesses:
J. D. COOKE,
L. H. HART.