April 4, 1950 A. C. LINDMARK 2,502,658

ELECTRICAL FIXTURE

Filed March 20, 1946

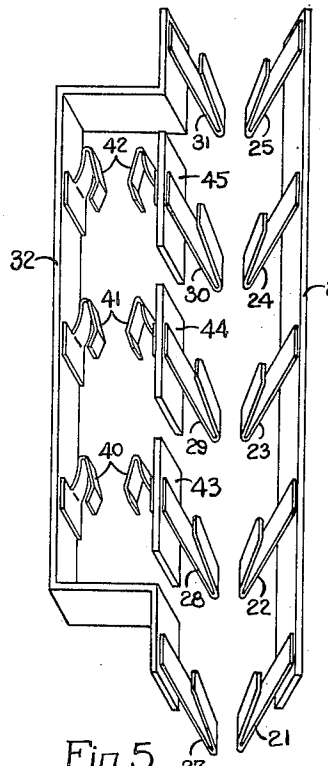

Fig. 5

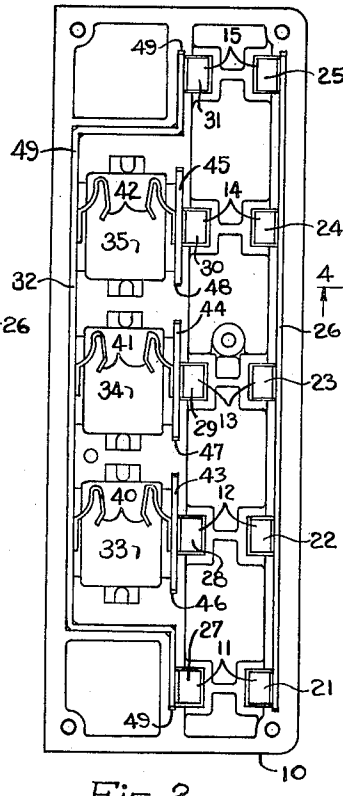

Fig. 2

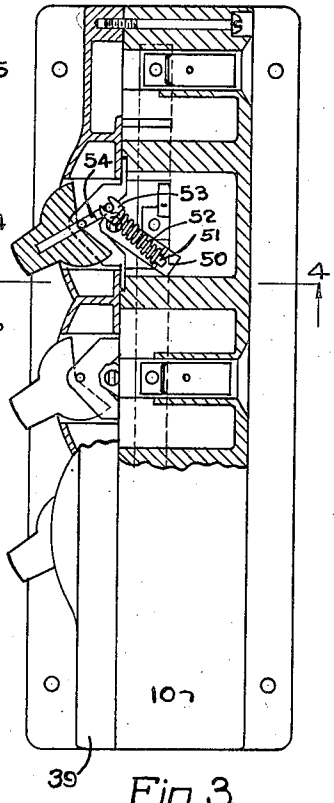

Fig. 3

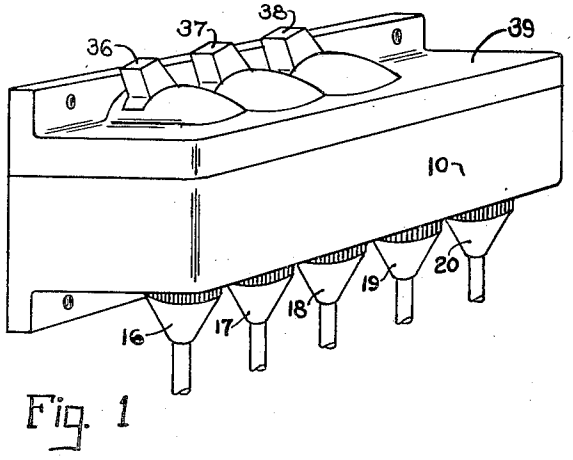

Fig. 1

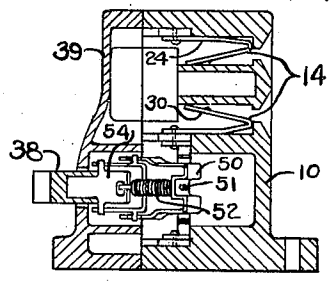

Fig. 4

INVENTOR
ANDREW C. LINDMARK
BY Paul M. Reist
ATTORNEY

Patented Apr. 4, 1950 2,502,658

UNITED STATES PATENT OFFICE

2,502,658

ELECTRICAL FIXTURE

Andrew C. Lindmark, Bridgeport, Conn.

Application March 20, 1946, Serial No. 655,698

15 Claims. (Cl. 200—51)

1

This invention relates to electrical fixtures and particularly to a multiple receptacle outlet for accommodating a plurality of electrical plugs simultaneously. Most multiple receptacle fixtures on the market today are of an open framework type which fit into the conventional wall outlet opening and include a plurality of receptacles adapted simultaneously to accommodate a plurality of electrical plugs for such devices as electric irons, fans, lights, radios, et cetera. These multiple-receptacle sockets, however, supply current to all of the receptacles, or none. There is provided no means for individually controlling the separate receptacles other than withdrawing the electrical plugs contained therein. This is objectionable because it requires substantial effort to find the correct one of a plurality of plugs each time it is desired to supply a desired device with current, and particularly obectionable if screw type plugs are employed instead of prong type.

Objects of this invention include the provision of a unitary assembly capable of being located anywhere, particularly in an unobtrusive location relatively to a conveniently located reclining object such as a bed, chair and the like, and which assembly contains a plurality of receptacles adapted to receive electrical plugs and an individual switch for each receptacle such that a plurality of devices can be individually turned on or shut off without disturbing the operation of each other; the provision of such an assembly including at least one receptacle having no corresponding switch for continuously supplying current to the assembly and/or supplying current to such an article as an electric clock which it is desired to operate continuously; the provision of such an assembly in which the individual plugs will not interfere with the operation of the individual switches; and the provision of such an assembly whereby separate devices can be remotely controlled from a single convenient location while all said devices remain electrically connected to a source of current.

The above, as well as other objects and novel features will become apparent from the following specification and accompanying drawing, in which:

Figure 1 is a perspective view of a unitary assembly embodying the principles of the invention;

Figure 2 is a top plan view of the assembly shown in Fig. 1 with the top cover removed to show the relation of the various elements of the combination;

Figure 3 is a side view of the device of Fig. 1, parts being broken away to show the conventional switch structure;

Figure 4 is a section taken substantially along line 4—4 of Fig. 3; and

Figure 5 is a perspective view of the conductors and spring contacts removed from the body of

2

the assembly and in their relative locations within said body.

Referring to the drawing, the invention is shown as applied to an electrical fixture including an open top boxlike housing 10 of insulating material having a plurality of pairs of openings 11, 12, 13, 14 and 15 in its bottom face which are adapted to receive the prongs of electrical plugs 16, 17, 18, 19 and 20. The pairs of openings, of course, may be single screw receptacle openings when screw plugs are employed instead of prong plugs.

Referring to Figure 5, spring contacts 21, 22, 23, 24 and 25 are respectively located within the right-hand openings (Fig. 2) of the pairs of openings 11 to 15 inclusive. Each of these spring contacts is adapted to be connected to a common conductor 26. The left-hand openings (Fig. 2) of the pairs of openings 11 to 15 are adapted respectively to receive springs contacts 27, 28, 29, 30 and 31. The contacts 28, 29 and 30 are insulated from each other, whereas contacts 27 and 31 are connected by a common conductor 32 for a purpose to be described later.

The box-like housing 10 also includes recesses 33, 34 and 35 adapted to receive toggle switches 36, 37 and 38, which latter are supported within a cover 39 adapted rigidly to be held on the top of the box-like housing 10 forming therewith a totally enclosed housing of insulating material. Pairs of spring contacts 40, 41 and 42 are located within the recesses 33, 34 and 35. Referring to Figure 2, the right-hand spring contacts of the pairs 40, 41 and 42 are respectively connected to individual electrically conducting supports 43, 44 and 45, which latter also rigidly support the spring contacts 28, 29 and 30. Slots 46, 47 and 48 are provided within the box-like housing 10 for snugly receiving the supports 43, 44 and 45, and the cover 39 holds these supports in their proper positions after assembly of the unit. A slot 49 is formed in the housing 10 for receiving the conductor 32. A similar slot is provided for the conductor 26. That portion of conductor 32 between spring contacts 27 and 31 passes along the left-hand side (Fig. 2) of the switch recesses 33, 34 and 35. The left-hand spring contacts of the pairs 40, 41 and 42 are spot welded, or otherwise rigidly attached to the conductor 32, as are all other spring contacts attached to their supports.

Only one of the switches 36, 37 and 38 will be specifically described because they all are identical. Furthermore, since the switches are of conventional construction, only those details thereof sufficient to show its relation to the other elements of the combination will be specifically described.

Referring to Figures 3 and 4, switch 38 includes a pivotally-mounted wiping contact member 50 adapted electrically to connect the pair of spring contacts 42 when it is in its one pivotal position,

and to disconnect said spring contacts when it is in its other pivotal position. The end of a pin 51 extends through the bottom of wiper 50 and supports a spring 52 thereon. The spring 52 is compressed between the bottom of wiper 50 and a head 53 on pin 51, which latter is bifurcated and engages a pivotally-mounted arm 54 forming therewith a toggle joint. The arm 54 is adapted to be moved about its pivot when switch 38 is operated, and when it reaches predetermined positions, the toggle action snaps the wiper 50 into and out of engagement with the spring contacts 42.

No switch is provided for spring contacts 21, 27 and 25, 31. Either of these is employed to receive a plug from a wall outlet to supply the assembly with current, while the other is employed for such an electrical device as a clock which is necessarily continuously operable. All other receptacles have their individual switches so that other electrical equipment can be permanently connected and each may be connected to, or disconnected from the source of current without affecting any of the others. The plugs 16, 17, 18, 19 and 20 preferably are insertable at the bottom of the unit, while switches 36, 37 and 38 are operated from the top thereof so that operation of the switches can be easily accomplished without encountering interference from the plugs.

Although the principles of the improved fixture have been shown and described in detail to disclose one embodiment of the invention, it will be evident that certain features may be used without others without departing from the principles of the invention.

What is claimed is:

1. An electrical fixture comprising in combination, a body member; a conductor within said body member extending throughout the length of said fixture; separate contacts on said conductor for one terminal of each of a plurality of receptacles; another conductor within said body member parallel and co-extensive with the first; separate contacts on said other conductor forming one terminal of each of a plurality of switches; means on each end of said co-extensive conductors forming plug-in connectors; and a plurality of intermediate conductors of substantially identical design within said housing, one for each of a plurality of groups of one receptacle and one switch each, said intermediate conductors having contacts for the remaining terminals of the receptacle and switch of its respective group.

2. An electrical fixture comprising in combination, a totally-enclosed housing of insulating material; a conductor within said housing extending throughout the length of said fixture; separate spring contacts on said conductor for one terminal of each of a plurality of receptacles; another conductor in said housing parallel and co-extensive with the first; separate spring contacts on said other conductor for one terminal of each of a plurality of switches; means on one end of said co-extensive conductors forming a plug-in connector; and a plurality of intermediate conductors of substantially identical design within said housing, one for each of a plurality of groups of one receptacle and one switch each, said intermediate conductors having spring contacts for the remaining terminals of the receptacle and switch of its respective group.

3. An electrical fixture comprising in combination, a totally-enclosed housing of insulating material; more than two receptacles in said housing for receiving electrical plugs; a conductor within said housing extending throughout the length of said fixtures; separate spring contacts on said conductor for one terminal of each of more than two said receptacles; at least two manually operable switches in said housing, one for each of said receptacles except at least one; another conductor in said housing parallel and co-extensive with the first; separate spring contacts on said other conductor for one terminal of each of said switches; and a plurality of intermediate conductors of substantially identical design in said housing, one for each of a plurality of groups of one receptacle and one switch each, said intermediate conductors having spring contacts for the remaining terminals of the receptacle and the switch of its respective group.

4. An electrical fixture comprising in combination, a body member; spaced parallel slots in said body member; unitary, current-carrying conductors within said slots; spring contacts on said conductors; separate aligned slots within said body member between said parallel slots; individual conductors in said separate slots; spring contacts on said individual conductors adapted to cooperate with the spring contacts on said unitary conductors; means for supplying current to said pair of conductors; means at one end of said unitary conductors forming a plug-in connector; and a cover adapted to be attached to said body member and constituting the sole means for holding all of said conductors rigidly in place in their respective slots.

5. An electrical fixture comprising in combination, a body member; a pair of co-extensive unitary current-carrying conductors within said body member and located in parallel relation on opposite sides of the longitudinal centerline of said body member; spring contacts at spaced intervals along each of said conductors; separate intermediate conductors of substantially identical design arranged in aligned relation between said parallel conductors; spring contacts on said intermediate conductors adapted to cooperate with the spring contacts on said parallel conductors; means at one end of said parallel conductors forming a plug-in connector; switches between certain of the spring contacts on one of said parallel conductors and the spring contacts on said intermediate conductors; and a cover adapted to be attached to said body member for holding all of said parts in cooperating position relatively to each other.

6. An electrical fixture comprising in combination, a body member; spaced parallel slots in said body member; unitary, current-carrying conductors within said slots; spring contacts on said conductors; separate aligned slots within said body member between said parallel slots; individual conductors in said separate slots; spring contacts on said individual conductors adapted to cooperate with the spring contacts on said unitary conductors; recesses within said body member between said individual and one of said unitary conductors; switches within said recesses; means at one end of said unitary conductors forming a plug-in connector; and a cover adapted to be attached to said body member and constituting the sole means for holding all of said parts rigidly in place within said body member.

7. An electrical fixture comprising in combination, a body member; unitary current-carrying conductors, co-extensive in length located within said body member such that the major portions

thereof are in parallel relation on opposite sides of the longitudinal centerline of said body member; spring contacts on said major portions of said conductors; separate conductors of substantially identical design located within said body member substantially along the longitudinal centerline thereof; spring contacts on said separate conductors adapted to cooperate with the spring contacts on the major portion of said unitary conductors; means at least at one end of said unitary conductors forming a plug-in connector; and a cover adapted to be attached to said body member and constituting the sole means for holding all of said conductors rigidly in place within said body member.

8. An electrical fixture comprising in combination, a body member; slots in said body member, substantially co-extensive therewith and a major portion of which are arranged in parallel relation on each side of, and spaced from the longitudinal centerline thereof; unitary current-carrying conductors, conforming to and located within said slots; spring contacts on said major portion of said conductors; additional individual slots located substantially along the longitudinal centerline of said body member; individual conductors of substantially identical design located within said additional slots; spring contacts on said individual conductors adapted to cooperate with the spring contacts on the major portion of said unitary current-carrying conductors; means at each end of said unitary current-carrying conductors forming plug-in connectors; and a cover adapted to be attached to said body member and constituting the sole means for holding all of said conductors rigidly in place in their respective slots.

9. An electrical fixture comprising in combination, a body member; slots in said body member, substantially coextensive therewith and a major portion of which are arranged in parallel relation on each side of, and spaced from the longitudinal centerline thereof; unitary current-carrying conductors, conforming to and located within said slots; spring contacts on said major portion of said conductors; additional individual slots located substantially along the longitudinal centerline of said body member; individual conductors of substantially identical design located within said additional slots; spring contacts on said individual conductors adapted to cooperate with the spring contacts on the major portion of said unitary current-carrying conductors; recesses within said body member between said individual and one of said unitary conductors; switches within said recesses; means at each end of said unitary current-carrying conductors forming plug-in connectors; and a cover adapted to be attached to said body member and constituting the sole means for holding all of said parts rigidly in place within said body member.

10. An electrical fixture comprising in combination, a body member; unitary current-carrying conductors, coextensive in length located within said body member such that the major portions thereof are in parallel relation on opposite sides of the longitudinal centerline of said body member; spring contacts on said major portions of said conductors; separate conductors of substantially identical design located within said body member substantially along the longitudinal centerline thereof; spring contacts on said separate conductors adapted to cooperate with the spring contacts on the major portion of said unitary conductors; recesses within said body member between said separate conductors and one of said unitary conductors; switches within said recesses; means at least at one end of said unitary conductors forming a plug-in connector; and a cover adapted to be attached to said body member and constituting the sole means for holding all of said conductors rigidly in place within said body member.

11. An electrical fixture comprising in combination, a body member; a plurality of receptacles having contacts in said body member adapted to receive electrical plugs; a plurality of switches having contacts, one switch for each of said receptacles except at least one; means for connecting one of the contacts of each of said receptacles and one of the contacts of its corresponding switch in parallel with similar contacts of every other of said receptacles and their corresponding switches, including unitary current-carrying bars arranged in parallel relation and extending throughout the length of said fixture; said one contact of each receptacle and said one contact of its corresponding switch being attached to said bars; and separate conductors of substantially identical design between said bars for each switch, and adapted to cooperate with the contacts of said receptacle and its corresponding switch.

12. An electrical fixture comprising in combination, a body member; more than two receptacles having contacts in said body member adapted to receive electrical plugs; a plurality of switches having contacts, one for each of said receptacles except at least one; means for connecting one of the contacts of each of said receptacles in series with one of the contacts of its corresponding switch and for connecting each series-arranged switch and receptacle in parallel with every other series-arranged switch and receptacle, including unitary current-carrying bars arranged in parallel relation and extending throughout the length of said fixture; said one contact of each receptacle and said one contact of its corresponding switch being attached to said bars; and separate conductors of substantially identical design between said bars for each switch, and adapted to cooperate with the contacts of said receptacle and its corresponding switch.

13. An electrical fixture comprising in combination, a totally-enclosed housing of insulating material; more than two receptacles each having contacts in said housing adapted to receive electrical plugs; switch means having contacts, one for each of said receptacles except at least one; means for connecting one of the contacts of each of said receptacles and one of the contacts of its corresponding switch means in parallel with similar contacts of every other of said receptacles and switch means, including unitary current-carrying bars arranged in parallel relation and extending throughout the length of said fixture; said one contact of each receptacle and said one contact of its corresponding switch being attached to said bars; and separate conductors of substantially identical design between said bars for each switch, and adapted to cooperate with the contacts of said receptacle and its corresponding switch.

14. An electrical fixture comprising in combination, a body member; a plurality of receptacles in said body member having openings and contacts on one side thereof for receiving electrical plugs; a plurality of manually-operable toggle switches having contacts in said body member, one for each of said receptacles except at least one, and each having operating means

extending from a single side of said body member other than that containing the openings for said receptacles; means for connecting one of the contacts of each of said receptacles and one of the contacts of its corresponding switch in parallel with similar contacts of every other of said receptacles and their corresponding switches, including unitary current-carrying bars arranged in parallel relation and extending throughout the length of said fixture; said one contact of each receptacle and said one contact of its corresponding switch being attached to said bars; and separate conductors of substantially identical design between said bars for each switch, and adapted to cooperate with the contacts of said receptacle and switch.

15. An electrical fixture comprising in combination, a totally-enclosed housing member of insulating material; more than two receptacles in said housing having openings and contacts on one side thereof for receiving electrical plugs; at least two manually-operable toggle switches having contacts in said housing, one for each of said receptacles except at least one, and each having operating means extending from a side of said housing other than that containing the openings of said receptacles; means for connecting one of the contacts of each of said receptacles and one

of the contacts of its corresponding switch in parallel with similar contacts of every other of said receptacles and corresponding switches, including unitary current-carrying bars arranged in parallel relation and extending throughout the length of said fixture; said one contact of each receptacle and said one contact of its corresponding switch being attached to said bars; and separate conductors of substantially identical design between said bars for each switch, and adapted to cooperate with the contacts of said receptacle and switch.

ANDREW C. LINDMARK.

REFERENCES CITED

The following references are of record in the file of this patent:

UNITED STATES PATENTS

Number	Name	Date
1,524,514	Frank	Jan. 27, 1925
1,538,157	Benjamin	May 19, 1925
2,026,303	Curran	Dec. 31, 1935
2,106,588	Benander	Jan. 25, 1938
2,109,725	Hart	Mar. 1, 1938
2,399,530	York et al.	Apr. 30, 1946