(19) Europäisches Patentamt
European Patent Office
Office européen des brevets

(11) EP 0 757 595 B1

(12) **EUROPEAN PATENT SPECIFICATION**

(45) Date of publication and mention of the grant of the patent:
12.05.1999 Bulletin 1999/19

(21) Application number: **95912929.7**

(22) Date of filing: **17.03.1995**

(51) Int. Cl.[6]: **B05C 5/02**, B05C 1/08

(86) International application number:
PCT/US95/03367

(87) International publication number:
WO 95/29765 (09.11.1995 Gazette 1995/48)

(54) **COMBINATION ROLL AND DIE COATING METHOD AND APPARATUS WITH IMPROVED DIE LIP**

VERFAHREN UND VORRICHTUNG ZUR KOMBINIERTEN WALZEN- UND EXTRUSIONSBESCHICHTUNG

PROCEDE ET APPAREIL D'ENDUCTION PAR ROULEAU ET FILIERE COMBINES A LEVRE DE FILIERE PERFECTIONNEE

(84) Designated Contracting States:
BE DE FR GB IT NL

(30) Priority: **29.04.1994 US 236568**

(43) Date of publication of application:
12.02.1997 Bulletin 1997/07

(73) Proprietor:
MINNESOTA MINING AND MANUFACTURING COMPANY
St. Paul, Minnesota 55133-3427 (US)

(72) Inventors:
- **BROWN, Omar, D.**
  Saint Paul, MN 55133-3427 (US)
- **MAIER, Gary, W.**
  Saint Paul, MN 55133-3427 (US)

(74) Representative:
Hilleringmann, Jochen, Dipl.-Ing.
Patentanwälte
von Kreisler-Selting-Werner,
Bahnhofsvorplatz 1 (Deichmannhaus)
50667 Köln (DE)

(56) References cited:

EP-A- 0 196 029	**EP-A- 0 466 420**
EP-A- 0 545 084	**DE-A- 4 304 281**
GB-A- 1 098 434	**GB-A- 1 192 515**
GB-A- 2 040 738	**US-A- 4 332 840**
US-A- 4 445 458	**US-A- 4 774 109**

- **RESEARCH DISCLOSURE, no.334, February 1992, EMSWORTH, GB pages 111 - 117, XP291212 'MANUFACTURING OF SOLVENT-BASED IMAGE-FORMING MATERIALS'**

Note: Within nine months from the publication of the mention of the grant of the European patent, any person may give notice to the European Patent Office of opposition to the European patent granted. Notice of opposition shall be filed in a written reasoned statement. It shall not be deemed to have been filed until the opposition fee has been paid. (Art. 99(1) European Patent Convention).

EP 0 757 595 B1

Description

[0001] The present invention relates to coating methods. More particularly, the present invention relates to coating methods using a die, as basically known from EP-A-0 466 420.

[0002] US-A-2,681,294 discloses a vacuum method for stabilizing the coating bead for direct extrusion and slide types of metered coating systems. Such stabilization enhances the coating capability of these systems. However, these coating systems lack sufficient overall capability to provide the thin wet layers, even at very low liquid viscosities, required for some coated products.

[0003] U.S. Patent US-A-4,445,458 discloses an extrvsion type bead-coating die with a beveled drawdown surface to impose a boundary force on the downstream side of the coating bead and to reduce the amount of vacuum necessary to maintain the bead. Reduction of the vacuum minimizes chatter defects and coating streaks. To improve coating quality, the obtuse angle of the beveled surface with respect to the slot axis, and the position along the slot axis of the bevel toward the moving web (overhang) and away from the moving web (underhang) must be optimized. The optimization results in the high quality needed for coating photosensitive emulsions. However, the thin-layer performance capability needed for some coated products is lacking.

[0004] Figure 1 shows a known coating die 10 with a vacuum chamber 12 as part of a metered coating system. A coating liquid 14 is precisely supplied by a pump 16 to the die 10 for application to a moving web 18, supported by a backup roller 20. Coating liquid is supplied through a channel 22 to a manifold 24 for distribution through a slot 26 in the die and coating onto the moving web 18. As shown in Figure 2, the coating liquid passes through the slot 26 and forms a continuous coating bead 28 between the upstream die lip 30 and the downstream die lip 32, and the web 18.

[0005] Dimensions F1 and F2, the width of the lips 30,32 commonly range from 0.25 to 0.76 mm. The vacuum chamber 12 applies a vacuum upstream of the bead to stabilize the bead.

[0006] From EP-A-0 466 420 a fountain coater for applying a coating fluid on a web is known in which the fountain is pivotable wherein the fountain angle may be adjusted without changing the gap between the tip of the fountain and the surface to be coated. The fountain is defined by two lips, wherein that lip which is on the downstream side in the direction of movement of the surface to be coated is longer than the other (upstream) lip. The tip of the downstream lip is lying substantially on the pivotal axis of the fountain. The slit defined between the two lips may be linear upstream of its mouth or open end or alternatively it may be curved so that the angle subtended between the issuing stream of the coating fluid and the surface to be coated is greater than that subtended by the longitudinal direction of the fountain to the surface to be coated. In the known coater, the distance between the front end of the upstream lip and the surface to be coated is larger than that between the front end of the downstream lip and the surface to be coated. The front end of the upstream lip is flat while that part of the downstream lip between the tip thereof and the upstream lip may be curved.

[0007] While the known configurations work adequately in many situations, there is a need for a die coating method and a die coater which improve the performance of known methods and devices.

[0008] According to the invention, this improvement is achieved by a die coating apparatus as defined in claim 1 and a die coating method as defined in claim 6. The subclaims relate to preferred embodiments, respectively.

[0009] The present invention is a die coating apparatus for coating fluid coating onto a surface. The apparatus includes a die having an upstream bar with an upstream lip and a downstream bar with a downstream lip. The upstream lip is formed as a land and the downstream lip is formed as a sharp edge having an edge radius no greater than 10 microns. A passageway runs through the die between the upstream and downstream bars. The passageway has a slot defined by the upstream and downstream lips, and coating fluid exits the die from the slot to form a continuous coating bead between the upstream die lip, the downstream die lip, and the surface being coated. A metering roller removes excess coating fluid. The bead does not significantly move into the space between the land and the surface to be coated even as vacuum is increased.

[0010] Alternatively the apparatus can include a roller on which the coating fluid is initially coated and which contacts the web. An excess coating fluid remover removes excess coating fluid from the roller. A die coats the coating fluid onto the roller. The remover can be a doctor blade or a metering roller and the coating liquid on the roller can be kiss transferred to the web.

[0011] A method of die coating according to the present invention includes passing coating fluid through a slot; improving coating performance by changing at least one of the relative orientations of the land and the sharp edge having a radius no greater than 10 microns; removing excess coating fluid from the surface to be coated using a metering roller; selecting the length of the land, the edge angle of the downstream bar, the die attack angle between the downstream bar surface of the coating slot and a tangent plane through a line on the surface to be coated parallel to, and directly opposite, the sharp edge, and the coating gap distance between the sharp edge and the surface to be coated in combination with each other; and selecting the slot height, the overbite, and the convergence in combination with each other.

[0012] Preferred embodiments of the invention will be described hereinbelow referring to the drawing in which:

Figure 1 is a schematic, cross-sectional view of a known coating die.

Figure 2 is an enlarged cross-sectional view of the slot and lip of the die of Figure 1.

Figure 3 is a cross-sectional view of an extrusion die of the present invention.

Figure 4 is an enlarged cross-sectional view of the slot and lip of the die of Figure 4.

Figure 5 is a cross-sectional view of the slot and lip similar to that of Figure 4.

Figure 6 is a cross-sectional view of an alternative vacuum chamber arrangement.

Figure 7 is a cross-sectional view of another alternative vacuum chamber arrangement.

Figure 8 is a cross-sectional view of an alternative extrusion die of the present invention.

Figures 9a and 9b are enlarged cross-sectional views of the slot, face, and vacuum chamber of the die of Figure 8.

Figures 10a and 10b are schematic views of the die of Figure 8.

Figure 11 shows coating test results which compare the performance of a known extrusion die and an extrusion die of the present invention for a coating liquid of 1.8 centipoise viscosity.

Figure 12 shows comparative test results for a coating liquid of 2.7 centipoise viscosity.

Figure 13 is a collection of data from coating tests.

Figure 14 is a graph of constant G/Tw lines for an extrusion coating die of the present invention for nine different coating liquids.

Figure 15 is a schematic view of a three roll reverse roll coater using the die of the present invention.

Figure 16 is schematic view of a two roll reverse roll coater using the die of the present invention.

Figure 17 is a schematic view of a gravure coater using the die of the present invention.

Figure 18 is a two roll extrusion coater using the die of the present invention.

Figures 19a, 19b, and 19c are cross-sectional views of a kiss coater using the die of the present invention.

Figures 20a, 20b, and 20c are cross-sectional views of a kiss coater using the die of the present invention.

Figure 20d is a cross-sectional view of a kiss coater using the die of Figure 19c.

[0013] This invention is a die coating method and apparatus where the die includes a sharp edge and a land which are positioned to improve and optimize performance. The land is configured to match the shape of the surface in the immediate area of coating liquid application. The land can be curved to match a web passing around a backup roller or the land can be flat to match a free span of web between rollers.

[0014] Figure 3 shows the extrusion die 40 with a vacuum chamber 42 of the present invention. Coating liquid 14 is supplied by a pump 46 to the die 40 for application to a moving web 48, supported by a backup roller 50. Coating liquid is supplied through a channel 52 to a manifold 54 for distribution through a slot 56 and coating onto the moving web 48. As shown in Figure 4, the coating liquid 14 passes through the slot 56 and forms a continuous coating bead 58 among the upstream die lip 60, the downstream die lip 62, and the web 48. The coating liquid can be one of numerous liquids or other fluids. The upstream die lip 60 is part of an upstream bar 64, and the downstream die 62 lip is part of a downstream bar 66. The height of the slot 56 can be controlled by a U-shaped shim which can be made of brass or stainless steel and which can be deckled. The vacuum chamber 42 applies vacuum upstream of the bead to stabilize the coating bead.

[0015] As shown in Figure 5, the upstream lip 60 is formed as a curved land 68 and the downstream lip 62 is formed as a sharp edge 70. This configuration improves overall performance over that of known die-type coaters. Improved performance means permitting operating at increased web speeds and increased coating gaps, operating with higher coating liquid viscosities, and creating thinner wet coating layer thicknesses.

[0016] The sharp edge 70 should be clean and free of nicks and burrs, and should be straight within 1 micron in 25 cm of length. The edge radius should be no greater than 10 microns. The radius of the curved land 68 should be equal to the radius of the backup roller 50 plus a minimal, and non-critical, 0.13 mm allowance for coating gap and web thickness. Alternatively, the radius of the curved land 68 can exceed that of the backup roller 50 and shims can be used to orient the land with respect to the web 48. A given convergence c achieved by a land with the same radius as the backup roller can be achieved by a land with a larger radius than the backup roller by manipulating the land with the shims.

[0017] Figure 5 also shows dimensions of geometric operating parameters for single layer extrusion. The length L_1 of the curved land 68 on the upstream bar 64 can range from 1.6 mm to 25.4 mm. The preferred length L_1 is 12.7 mm. The edge angle A_1 of the downstream bar 66 can range from 20° to 75°, and is preferably 60°. The edge radius of the sharp edge 70 should be from about 2 microns to about 4 microns and preferably less than 10 microns. The die attack angle A_2 between the downstream bar 66 surface of the coating slot 56 and the tangent plane P through a line on the web 48 surface parallel to, and directly opposite, the sharp edge 70 can range from 60° to 120° and is preferably 90°-95°, such as 93°. The coating gap G_1 is the perpendicular distance between the sharp edge 70 and the web 48. (The coating gap G_1 is measured at the sharp edge but is shown in some Figures spaced from the sharp edge for drawing clarity. Regardless of the location of G_1 in the drawings - and due to the curvature of the web the gap increases as one moves away from the sharp edge - the gap is measured at the sharp

edge.)

[0018] Slot height H can range from 0.076 mm to 3.175 mm. Overbite O is a positioning of the sharp edge 70 of the downstream bar 66, with respect to the downstream edge 72 of the curved land 68 on the upstream bar 64, in a direction toward the web 48. Overbite also can be viewed as a retraction of the downstream edge 72 of the curved land 68 away from the web 48, with respect to the sharp edge 70, for any given coating gap G_1. overbite can range from 0 mm to 0.51 mm, and the settings at opposite ends of the die slot should be within 2.5 microns of each other. A precision mounting system for this coating system is required, for example to accomplish precise overbite uniformity. Convergence C is a counterclockwise, as shown in Figure 5, angular positioning of the curved land 68 away from a location parallel to (or concentric with) the web 48, with the downstream edge 72 being the center of rotation. Convergence can range from 0° to 2.29°, and the settings at opposite ends of the die slot should be within 0.023° of each other. The slot height, overbite, and convergence, as well as the fluid properties such as viscosity affect the performance of the die coating apparatus and method.

[0019] From an overall performance standpoint, for liquids within the viscosity range of 1,000 centipoise and below, it is preferred that the slot height be 0.18 mm, the overbite be 0.076 mm, and the convergence be 0.57°. Performance levels using other slot heights can be nearly the same. Performance advantages can also be found at viscosities above 1,000 centipoise. Holding convergence at 0.57°, some other optimum slot height and overbite combinations are as follows:

Slot Height	Overbite
0.15 mm	0.071 mm
0.20 mm	0.082 mm
0.31 mm	0.100 mm
0.51 mm	0.130 mm

In the liquid viscosity range noted above, and for any given convergence value, the optimum overbite value appears to be directly proportional to the square root of the slot height value. Similarly, for any given slot height value, the optimum overbite value appears to be inversely proportional to the square root of the convergence value.

[0020] As shown in Figure 6, the vacuum chamber 42 can be an integral part of, or clamped to, the upstream bar 64 to allow precise, repeatable vacuum system gas flow. The vacuum chamber 42 is formed using a vacuum bar 74 and can be connected through an optional vacuum restrictor 76 and a vacuum manifold 78 to a vacuum source channel 80. A curved vacuum land 82 can be an integral part of the upstream bar 64, or can be part of the vacuum bar 74, which is secured to the upstream bar 64. The vacuum land 82 has the same radius of curvature as the curved land 68. The curved land 68 and the vacuum land 82 can be finish-ground together so they are "in line" with each other. The vacuum land 82 and the curved land 68 then have the same convergence C with respect to the web 48.

[0021] The vacuum land gap G_2 is the distance between the vacuum land 82 and the web 48 at the lower edge of the vacuum land and is the sum total of the coating gap G_1, the overbite O, and the displacement caused by convergence C of the curved land 68. (Regardless of the location of G_1 in the drawings the gap is the perpendicular distance between the lower edge of the vacuum land and the web.) When the vacuum land gap G_2 is large, an excessive inrush of ambient air to the vacuum chamber 42 occurs. Even though the vacuum source may have sufficient capacity to compensate and maintain the specified vacuum pressure level at the vacuum chamber 42, the inrush of air can degrade coating performance.

[0022] In Figure 7, the vacuum land 82 is part of a vacuum bar 74 which is attached to the upstream bar 64. During fabrication, the curved land 68 is finished with the convergence C "ground in." The vacuum bar 74 is then attached and the vacuum land 82 is finish ground, using a different grind center, such that the vacuum land 82 is parallel to the web 48, and the vacuum land gap G_2 is equal to the coating gap G_1 when the desired overbite value is set. The vacuum land length L_2 may range from 6.35 mm to 25.4 mm. The preferred length L_2 is 12.7 mm. This embodiment has greater overall coating performance capability in difficult coating situations than the embodiment of Figure 6, but it is always finish ground for one specific set of operating conditions. So, as coating gap G_1 or overbite O are changed vacuum land gap G_2 may move away from its optimum value.

[0023] In Figures 8 and 9 the upstream bar 64 of the die 40 is mounted on an upstream bar positioner 84, and the vacuum bar 74 is mounted on a vacuum bar positioner 86. The curved land 68 on the upstream bar 64 and the vacuum land 82 on the vacuum bar 74 are not connected directly to each other. The vacuum chamber 42 is connected to its vacuum source through the vacuum bar 74 and the positioner 86. The mounting and positioning for the vacuum bar 74 are separate from those for the upstream bar 64. This improves performance of the die and allows precise, repeatable vacuum system gas flow. The robust configuration of the vacuum bar system also aids in the improved performance as compared with known systems. Also, this configuration for the vacuum bar 74 could improve performance of other known coaters, such as slot, extrusion, and slide coaters. A flexible vacuum seal strip 88 seals between the upstream bar 64 and the vacuum bar 74.

[0024] The gap G_2 between the vacuum land 82 and the web 48 is not affected by coating gap G_1, overbite O, or convergence C changes, and may be held at its optimum value continuously, during coating. The vacuum land gap G_2 may be set within the range from 0.076 mm to 0.508 mm. The preferred value for the gap G_2 is 0.15 mm. The preferred angular position for the vacuum land 82 is parallel to the web 48.

[0025] During coating, the vacuum level is adjusted to produce the best quality coated layer. A typical vacuum level, when coating a 2 centipoise coating liquid at 6 microns wet layer thickness and 30.5 m/min web speed, is 51 mm H_2O. Decreasing wet layer thickness, increasing viscosity, or increasing web speed could require higher vacuum levels exceeding 150 mm H_2O. Dies of this invention exhibit lower satisfactory minimum vacuum levels and higher satisfactory maximum vacuum levels than known systems, and in some situations can operate with zero vacuum where known systems cannot.

[0026] Figures 10a and 10b show some positioning adjustments and the vacuum chamber closure. Overbite adjustment translates the downstream bar 66 with respect to the upstream bar 64 such that the sharp edge 70 moves toward or away from the web 48 with respect to the downstream edge 72 of the curved land 68. Adjusting convergence rotates the upstream bar 64 and the downstream bar 66 together around an axis running through the downstream edge 72, such that the curved land 68 moves from the position shown in Figure 10, away from parallel to the web 48, or back toward parallel. Coating gap adjustment translates the upstream bar 64 and the downstream bar 66 together to change the distance between the sharp edge 70 and the web 48, while the vacuum bar remains stationary on its mount 86, and the vacuum seal strip 88 flexes to prevent air leakage during adjustments. Air leakage at the ends of the die into the vacuum chamber 42 is minimized by end plates 90 attached to the ends of the vacuum bar 74 which overlap the ends of the upstream bar 64. The vacuum bar 74 is 0.10 mm to 0.15 mm longer than the upstream bar 64, so, in a centered condition, the clearance between each end plate 90 and the upstream bar 64 will range from 0.050 mm to 0.075 mm.

[0027] One unexpected operating characteristic has been observed during coating. The bead does not move significantly into the space between the curved land 68 and the moving web 48, even as vacuum is increased. This allows using higher vacuum levels than is possible with known extrusion coaters, and provides a correspondingly higher performance level. Even where little or no vacuum is required, the invention exhibits improved performance over known systems. That the bead does not move significantly into the space between the curved land 68 and the web 48 also means that the effect of "runout" in the backup roller 50 on downstream coating weight does not differ from that for known extrusion coaters.

[0028] Figure 11 graphs results of coating tests which compare the performance of a known extrusion die with an extrusion die of this invention. In the tests, the 1.8 centipoise coating liquid containing an organic solvent was applied to a plain polyester film web. The performance criterion was minimum wet layer thickness at four different coating gap levels for each of the two coating systems, over the speed range of 15 to 60 m/min. Curves A, B, C, and D use the known, prior art die and were performed with coating gaps of 0.254 mm, 0.203 mm, 0.152 mm, and 0.127 mm, respectively. Curves E, F, G, and H use a die according to this invention at the same respective coating gaps. The lower wet thickness levels for this invention, compared to the prior art die, are easily visible. Figure 12 shows comparative test results for a similar coating liquid of 2.7 centipoise viscosity, at the same coating gaps. Once again, the performance advantage for this invention is clearly visible.

[0029] Figure 13 is a collection of data from coating tests where liquids at seven different viscosities, and containing different organic solvents, were applied to plain polyester film webs. The results compare performance of the prior art extrusion coater (PRIOR) and this invention (NEW). The performance criteria are mixed. Performance advantages for this invention can be found in web speed (Vw), wet layer thickness (Tw), coating gap, vacuum level, or a combination of these.

[0030] One measure of coater performance is the ratio of coating gap to wet layer thickness (G/Tw), for a particular coating liquid and web speed. Figure 14 shows a series of constant G/Tw lines and viscosity values of an extrusion die of this invention, for nine different coating liquids. The liquids were coated on plain polyester film base at a web speed of 30.5 m/min. A few viscosity values appear to be out of order, due to the effect of other coatability factors. Four additional performance lines have been added after calculating the G/Tw values for 30.5 m/min web speed from Figures 11 and 12. From top to bottom, the solid performance lines are the G/Tw for liquids of 2.7 centipoise and 1.8 centipoise coated by a known extrusion die and the G/Tw for liquids of 2.7 centipoise and 1.8 centipoise coated by an extrusion die of this invention. The lines for of this invention represent greater G/Tw values than the lines for of the prior art coating die. In addition, the lines for this invention are close to being lines of constant G/Tw, averaging 18.8 and 16.8, respectively. The lines of the known coater show considerably more G/Tw variation over their length. This invention has a much improved operating characteristic for maintaining a coating bead at low wet thickness values, over known systems.

[0031] Coating dies of this invention can be used as high performance liquid feed devices for roll and kiss coaters. Figure 15 shows a three roll reverse roll coater using an extrusion die 40 to feed coating liquid 14 to a casting roller 330. Because the surface of the casting roller 330 passes the die 40 in a downward direction, the die 40 is inverted and the vacuum chamber 42 is

above the slot and the coating bead. This does not affect coating performance. A metering roller 332 removes excess coating liquid, leaving a precise layer on the casting roller 330. A doctor blade 334 removes the excess coating liquid from the metering roller 332 and drops it into a liquid return pan 336 for recirculation.

[0032] Meanwhile, a bead-splitting action transfers part of the coating liquid from the casting roller 330 to the web 48 moving around the backup roller 50. After the bead splits, a second doctor blade 338 cleans the remaining coating liquid from the casting roller 330 and runs it into the recirculation pan 336. Alternatively, the backup roller 50 can be rubber covered so the casting roller 330 can contact the web and transfer all of the coating liquid in this area to the web. The second doctor blade 338 would then clean any liquid from the casting roller 330 which is outside of the web width.

[0033] Figure 16 shows a two roll reverse roll coater using an extrusion die 40 to feed coating liquid to the surface of the web 48 moving around the backup roller 14, which is a wrapped casting roller. The metering roller 332 removes excess coating liquid from the surface of the web 48, leaving the desired, precise wet coated layer. The doctor blade 334 cleans the excess coating liquid from the metering roller 332 and runs it into the recirculation pan 336. Use of this system in one example increased the vacuum window from 5.08 mm to over 254 mm H_2O, and increased the liquid feed coating gap from 0.10 mm to 0.36 mm, thereby improving stability and practically eliminating streaking.

[0034] Figure 17 shows a gravure coater using an extrusion die 40 to feed coating liquid to the surface of a knurled roller 340. The die 40 has its vacuum chamber 42 above its coating slot. A doctor blade 342 removes excess coating liquid from the knurl pattern so that the desired amount transfers to the web 48 moving around the rubber-covered backup roller 314. The excess coating liquid recirculates through the pan 336. This method of feeding coating liquid to the surface of a knurled roller can also be used for other forms of gravure coating such as reverse, offset, and differential.

[0035] Figure 18 shows a two roll extrusion coater using an extrusion die 40 to feed coating liquid to the surface of the casting roller 330, with stability from the vacuum chamber 42. The layer of coating liquid is thin and precise so that a metering roll is not required. The bead split takes place directly to the web 48 moving around the backup roller 314. A doctor blade 338 removes the coating excess liquid from the casting roller 330 and recirculates it through the pan 336. Alternatively, the backup roller 50 can be rubber covered so the casting roller 330 can contact the web and transfer all of the coating liquid in this area to the web. The second doctor blade 338 would then clean any liquid from the casting roller 330 which is outside of the web width.

[0036] Figure 19a shows a kiss coater where an extrusion die 40 feeds coating liquid through a manifold 54 and a slot 56 to a transfer roller 344 such as a spindle having a diameter ranging from 25.4 mm to 50.8 mm. The coating bead is stabilized by the vacuum chamber 42. The coating liquid on the transfer roller 344 is kiss transferred to form the coated layer on the web 48. The small diameter transfer roller 344 has a small kiss transfer area, and improves web stability over that with a larger transfer roller by reducing web flutter and cross tension marks. The surface of the transfer roller 344 can be, for example, smooth, polished, medium grind, grit blasted, or knurled.

[0037] Figure 19b shows a kiss coater where the extrusion die 40 with a vacuum chamber 42 feeds coating liquid to the surface of a kiss transfer roller 344. The roller 344 has a larger diameter than the spindle of Figure 19a. The coating liquid is kiss transferred to form the coated layer on the web 48.

[0038] Figure 19c shows a kiss coater where a slide coating die 310 feeds coating liquid to the surface of a kiss transfer roller 344. The coating liquid is kiss transferred to form the coated layer on the web 48.

[0039] Figure 20a shows a kiss coater where a dual-layer extrusion die 100 feeds two coating liquids 116, 124 through channels 118, 126 to the surface of a spindle, such as a transfer roller 344 having a diameter ranging from 25.4 mm to 50.8 mm. The two coating liquids on the transfer roller 344 are transferred to form two coated layers on the web 48.

[0040] Figure 20b shows a kiss coater where a dual-layer extrusion die 100 feeds coating liquid to a kiss transfer roller. The roller 344 has a larger diameter than the roller of Figure 20a. Two coating liquids 116, 124 are fed through two separate manifolds and two separate slots to meet at the coating bead. The two coating liquids are transferred to the web forming wet coated layers.

[0041] Figure 20c shows a kiss coater where a dual-layer extrusion die 100 feeds coating liquid to a kiss transfer roller 344. The two coating liquids 116, 124 are fed through two manifolds, but only one slot, meeting inside the die. The two coating liquids on the surface of the transfer roller 344 are transferred to form the two coated layers on the web 48.

[0042] Figure 20d shows a kiss coater where a multiple layer coating version of the die 220 of Figure 19c feeds four coating liquids onto the surface of the transfer roller 344. Four liquids 116, 124, 346, 348 are fed through the die 100, down slide surfaces 236 to form four layers on the surface of the transfer roller 344. These layers are transferred to form four coated layers on the web 48.

Claims

1. A die coating apparatus for coating fluid coating onto a web moving around a backup roller comprising:

   - a die (40) having an upstream bar (64) with an

upstream lip (60) and a downstream bar (66) with a downstream lip (62), wherein the upstream lip (60) is formed as a land (68) having a shape corresponding to that of the backup roller (50), and the downstream lip (62) is formed as a sharp edge (70),

- a passageway (52) running through the die (40) between the upstream and downstream bars (64,66), wherein the passageway comprises a slot (56) defined by the upstream and downstream lips (60, 62), wherein coating fluid exits the die (40) from the slot (56) to form a continuous coating bead (58) between the upstream die lip (60), the downstream die lip (62), and a surface being coated, and
- a metering means which removes excess coating fluid from the surface being coated,

characterized in that

- the metering means is a metering roller (332), and
- the downstream lip (62) has an edge radius no greater than 10 microns.

2. The die coating apparatus of claim 1 further comprising:

- a roller (344) on which the coating fluid is initially coated and which subsequently transfers the coating fluid to the web (48), and
- means (338) for removing excess coating fluid from the roller (344) wherein the removing means (338) contacts the roller (344) to remove excess coating fluid,
- wherein the upstream lip (60) is formed as a land (68) having a curved shape matching the roller (344).

3. The apparatus of claim 2 wherein the removing means comprises a doctor blade (338).

4. The apparatus of claim 2 wherein the removing means comprises the metering roller (332).

5. The apparatus of claim 3 wherein the coating liquid on the roller is kiss transferred to the web (48).

6. A method of die coating a surface comprising:

- passing coating fluid through a slot (56) defined by an upstream bar (64) with an upstream lip (60) and a downstream bar (66) with a downstream lip (62), wherein the upstream lip is formed as a land (68) having a shape corresponding to that of the surface to be coated and the downstream lip (62) is formed as a sharp edge (70),
- improving coating performance by changing the orientation of one of the land (68) and the sharp edge (70),
- removing excess coating fluid from the surface to be coated using a metering means (332) which contacts the surface to be coated,
- selecting a length (L) of the land (68), an edge angle (A_1) of the downstream bar (66), a die attack angle (A_2) between the downstream bar surface of the coating slot (56) and a tangent plane through a line on the surface to be coated parallel to and directly opposite the sharp edge (70), and a coating gap distance (G) between the sharp edge (70) and the surface to be coated in combination with each other, and
- selecting a slot height (H), an overbite (O), and a convergence (C) in combination with each other,

characterized in that

- a roller (332) is used as the metering means, and
- a downstream lip (62) with an edge radius no greater than 10 microns is used.

7. The method of claim 6 further comprising the step of applying a vacuum upstream of a formed coating bead (58) to stabilize the bead (58), wherein the bead (58) does not significantly move into the space between the land (68) and the surface to be coated even as vacuum is increased.

Patentansprüche

1. Düsenbeschichtungsvorrichtung zum Aufbringen von Fluidbeschichtungen auf eine Bahn, die sich um eine Stützrolle bewegt, mit:

- einer Düse (40) mit einem stromaufwärtigen Element (64) mit einer stromaufwärtigen Lippe (60) und einem stromabwärtigen Element (66) mit einer stromabwärtigen Lippe (62), wobei die stromaufwärtige Lippe (60) als Steg (68) mit einer der Stützrolle (50) entsprechenden Form ausgebildet ist, und die stromabwärtige Lippe (62) als scharfe Kante (70) ausgebildet ist,

- einem zwischen dem stromaufwärtigen und dem stromabwärtigen Element (64, 66) verlaufenden Durchgang (52), der einen durch die stromaufwärtige und die stromabwärtige Lippe (60, 62) gebildeten Schlitz (56) aufweist, wobei Beschichtungsfluid aus der Düse (40) durch den Schlitz (56) austritt, um einen durchgehenden Beschichtungswulst (58) zwischen der stromaufwärtigen Düsenlippe (60), der stromabwärtigen Düsenlippe (62) und einer zu beschichtenden Fläche zu bilden, und

- einer Rakeleinrichtung, die überschüssiges Beschichtungsfluid von der zu beschichtenden Fläche entfernt,
dadurch gekennzeichnet, daß

- die Rakeleinrichtung eine Rakelrolle (332) ist, und

- die stromabwärtige Lippe (62) einen Kantenradius von nicht mehr als 10 Mikrometer hat.

2. Düsenbeschichtungsvorrichtung nach Anspruch 1, ferner mit:

- einer Rolle (344), auf der das Beschichtungsfluid zunächst aufgebracht ist, und die das Beschichtungsfluid anschließend auf die Bahn (48) überträgt, und

- einer Einrichtung (338) zum Entfernen überschüssigen Beschichtungsfluids von der Rolle 344, wobei die Entfernungseinrichtung (338) die Rolle (344) zum Entfernen überschüssigen Beschichtungsfluids berührt

- wobei die stromaufwärtige Lippe (60) als Steg (68) mit einer der Rolle (344) angepaßten gebogenen Form ausgebildet ist.

3. Vorrichtung nach Anspruch 2, bei der die Entfernungseinrichtung ein Abstreifrakel (338) aufweist.

4. Vorrichtung nach Anspruch 2, bei der die Entfernungseinrichtung die Rakelrolle (332) aufweist.

5. Vorrichtung nach Anspruch 3, bei der das Beschichtungsfluid auf der Rolle im Auftragbeschichtungsverfahren auf die Bahn (40) aufgebracht wird.

6. Verfahren zum Düsenbeschichten einer Fläche, mit den folgenden Schritten:

- Leiten von Beschichtungsfluid durch einen Schlitz (56), der durch ein stromaufwärtiges Element (64) mit einer stromaufwärtigen Lippe (60) und ein stromabwärtiges Element (66) mit einer stromabwärtigen Lippe (62) gebildet ist, wobei die stromaufwärtige Lippe (60) als Steg (68) mit einer der Stützrolle (50) entsprechenden Form ausgebildet ist, und die stromabwärtige Lippe (62) als scharfe Kante (70) ausgebildet ist,

- Verbessern der Beschichtungsleistung durch Verändern der Ausrichtung entweder des Stegs (68) oder der scharfen Kante (70),

- Entfernen überschüssigen Beschichtungsfluids von der zu beschichtenden Fläche unter Verwendung einer Rakeleinrichtung (332), welche die zu beschichtende Fläche berührt,

- Wählen einer Länge (L) des Stegs (68), eines Kantenwinkels (A_1) des stromabwärtigen Elements (66), eines Düsenangriffswinkels (A_2) zwischen der stromabwärtigen Elementfläche des Beschichtungsschlitzes (56) und eine Tangentenebene durch eine zu der scharfen Kante (70) parallelen und dieser direkt gegenüberliegenden Linie auf der zu beschichtenden Fläche, und einer Beschichtungsspaltweite (G) zwischen der scharfen Kante (70) und der zu beschichtenden Fläche, und zwar in Kombination miteinander, und

- Wählen einer Schlitzhöhe (H), eines Überstandes (O) und einer Konvergenz (C), und zwar in Kombination miteinander,
dadurch gekennzeichnet; daß

- als Rakeleinrichtung eine Rolle (332) verwendet wird, und

- eine stromabwärtige Lippe (62) mit einem Kantenradius von nicht mehr als 10 Mikrometer verwendet wird.

7. Verfahren nach Anspruch 6, ferner mit dem Schritt des Aufbringens von Unterdruck stromaufwärts eines gebildeten Beschichtungswulstes (58) zum Stabilisieren des Wulstes (58), wobei der Wulst (58) sich nicht wesentlich in den raum zwischen dem Steg (68) und der zu beschichtenden Fläche bewegt, selbst wenn der Unterdruck erhöht wird.

Revendications

1. Appareil d'enduction par filière destiné à enduire un enduit fluide sur une membrane se déplaçant autour d'un rouleau de soutien, qui comporte:

- une filière (40) possédant une tablette amont (64) munie d'une lèvre amont (60) et une tablette aval (66) munie d'une lèvre aval (62), dans laquelle la lèvre amont (60) est façonnée comme un méplat (68) ayant une forme correspondant à celle du rouleau (50) de soutien, et la lèvre aval (62) est façonnée comme une arête pointue (70),
- une conduite de passage (52) traversant la filière (40) entre les tablettes amont et aval (64, 66), où la conduite de passage comporte une fente (56) délimitée par les lèvres amont et aval (60, 62), dans laquelle du fluide formant enduit sort de la filière (40) à partir de la fente (56) de

manière à constituer un bourrelet continu (58) d'enduit entre la lèvre amont (60) de la filière, la lèvre aval (62) de la filière, et une surface en train d'être enduite, et

- un moyen de dosage qui enlève le fluide formant enduit en excès de la surface en train d'être enduite,

caractérisé en ce que

- le moyen de dosage est un rouleau (332) de dosage, et
- la lèvre aval (62) a un rayon d'arête qui n'est pas supérieur à 10 micromètres.

2. Appareil d'enduction par filière selon la revendication 1 qui comporte en outre:

- un rouleau (344) sur lequel le fluide formant enduit est initialement enduit et qui transfère ultérieurement ce fluide formant enduit à la membrane (48), et
- un moyen (338) destiné à enlever le fluide formant enduit en excès du rouleau (344) où le moyen (338) d'enlèvement prend contact avec le rouleau (344) afin d'enlever le fluide formant enduit en excès,
- dans lequel la lèvre amont (60) est façonnée comme un méplat (68) ayant une forme courbe assortie au rouleau (344).

3. Appareil selon la revendication 2 dans lequel le moyen d'enlèvement comporte une palette (338) formant racloir.

4. Appareil selon la revendication 2 dans lequel le moyen d'enlèvement comporte le rouleau (332) de dosage.

5. Appareil selon la revendication 3 dans lequel le liquide formant enduit situé sur le rouleau est transféré par effleurement à la membrane (48).

6. Procédé d'enduction par filière d'une surface, qui comporte:

- l'opération consistant à faire passer du fluide formant enduit à travers une fente (56) délimitée par une tablette amont (64) munie d'une lèvre amont (60) et par une tablette aval (66) munie d'une lèvre aval (62), où la lèvre amont est façonnée comme un méplat (68) ayant une forme correspondant à celle de la surface qui doit être enduite et où la lèvre aval (62) est façonnée comme une arête pointue (70),
- l'amélioration fonctionnelle de la réalisation de l'enduction par une modification de l'orientation soit du méplat (68) soit de l'arête pointue (70),
- l'enlèvement du fluide formant enduit en excès de la surface devant être enduite en utilisant un moyen (332) de dosage qui prend contact avec la surface devant être enduite,
- la sélection d'une longueur (L) pour le méplat (68), d'un angle (A1) d'arête pour la tablette aval (66), d'un angle (A2) d'attaque pour la filière entre la surface de tablette côté aval de la fente (56) d'enduction et un plan tangent passant par une droite située sur la surface devant être enduite qui est parallèle et directement opposée à l'arête pointue (70), et d'une dimension (G) pour l'interstice d'enduction entre l'arête pointue (70) et la surface devant être enduite en combinaison les uns avec les autres, et
- la sélection d'une hauteur (H) de fente, d'une avancée (O) en surplomb, et d'une convergence (C) en combinaison les unes avec les autres,

caractérisé en ce que

- on utilise un rouleau (332) comme le moyen de dosage, et
- on utilise une lèvre aval (62) présentant un rayon d'arête qui n'est pas supérieur à 10 micromètres.

7. Procédé selon la revendication 6 qui comporte en outre l'opération consistant à appliquer une dépression en amont d'un bourrelet (58) constitué d'enduit de manière à stabiliser le bourrelet (58), où ce bourrelet (58) ne se déplace pas de façon significative jusque dans l'espace existant entre le méplat (68) et la surface devant être enduite même lorsque la dépression sous vide est augmentée.

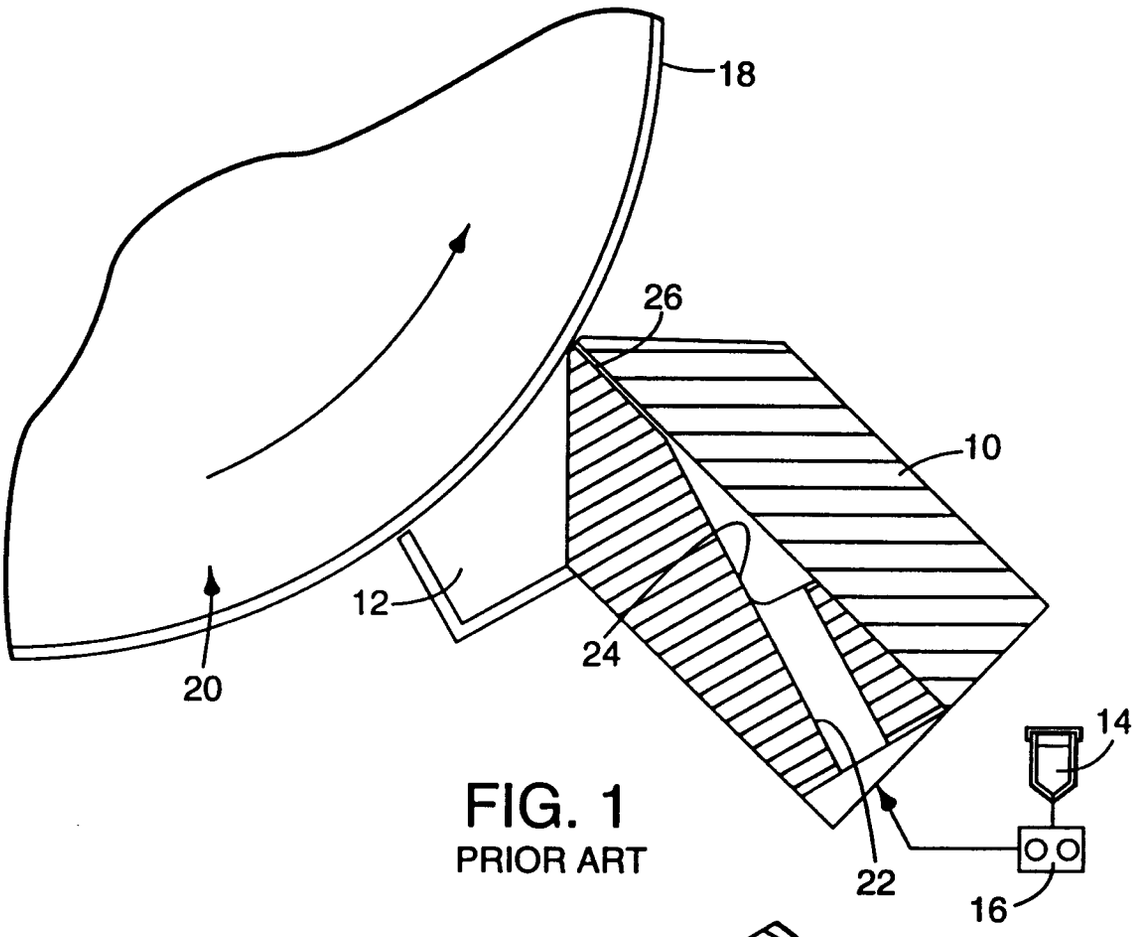

FIG. 1
PRIOR ART

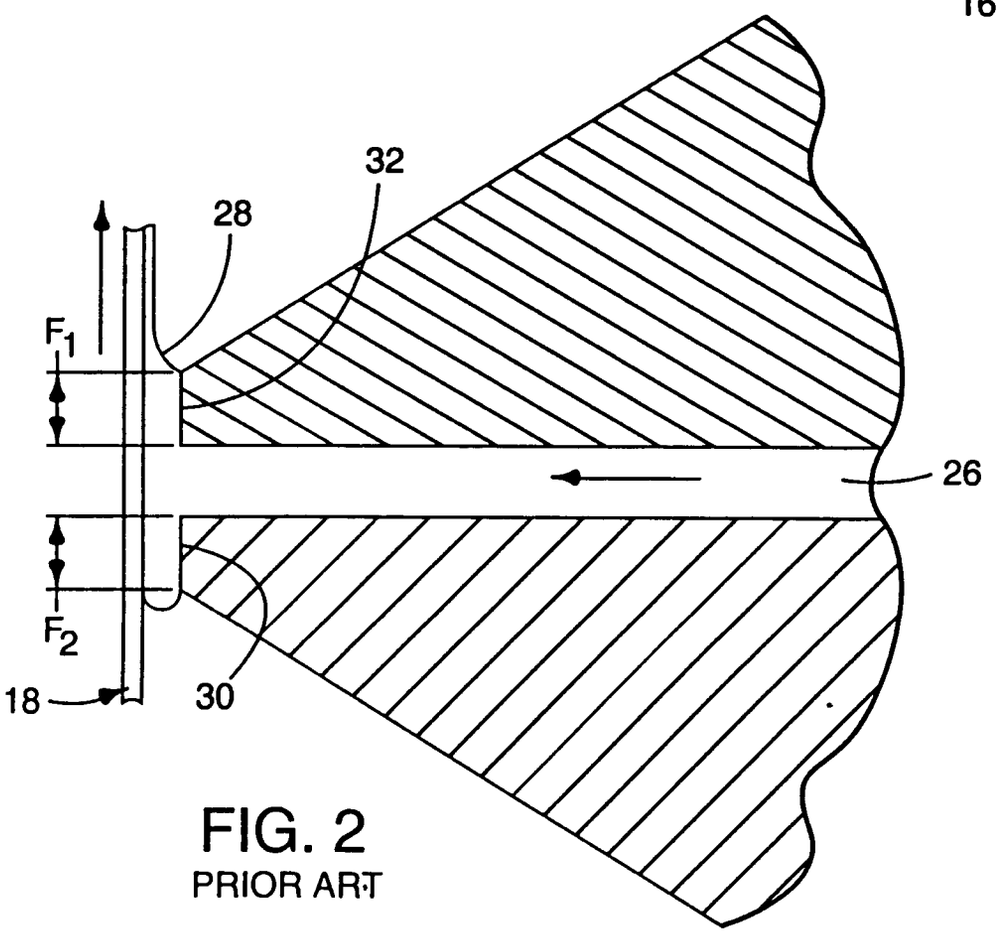

FIG. 2
PRIOR ART

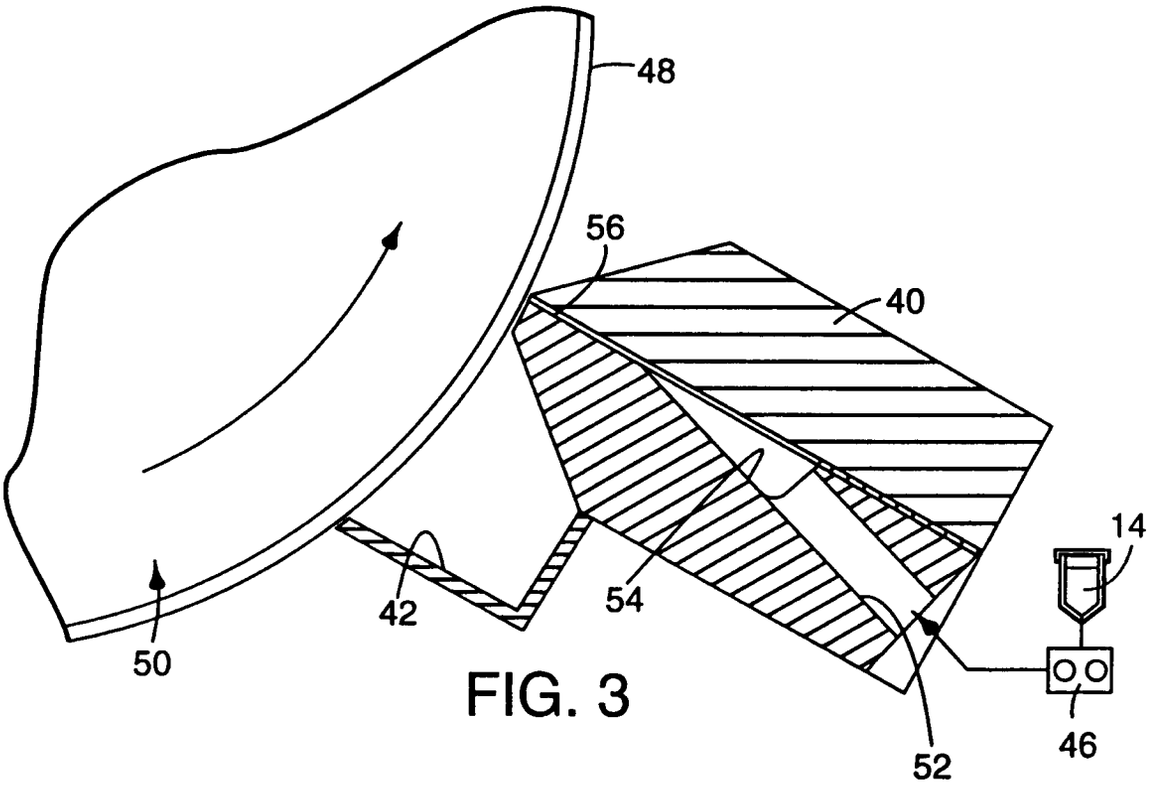

FIG. 3

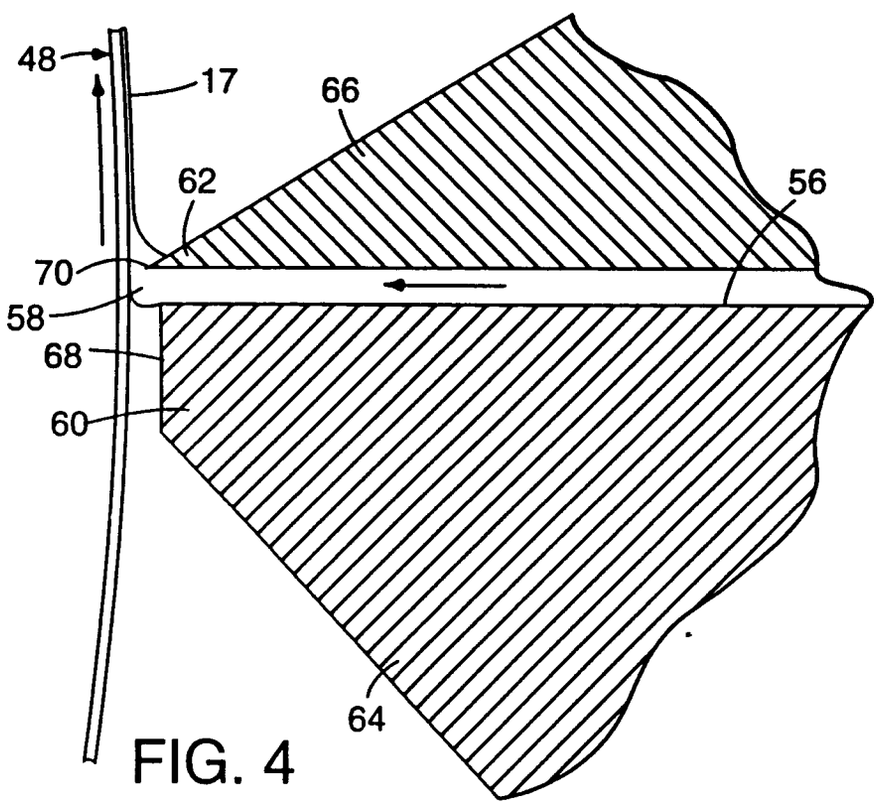

FIG. 4

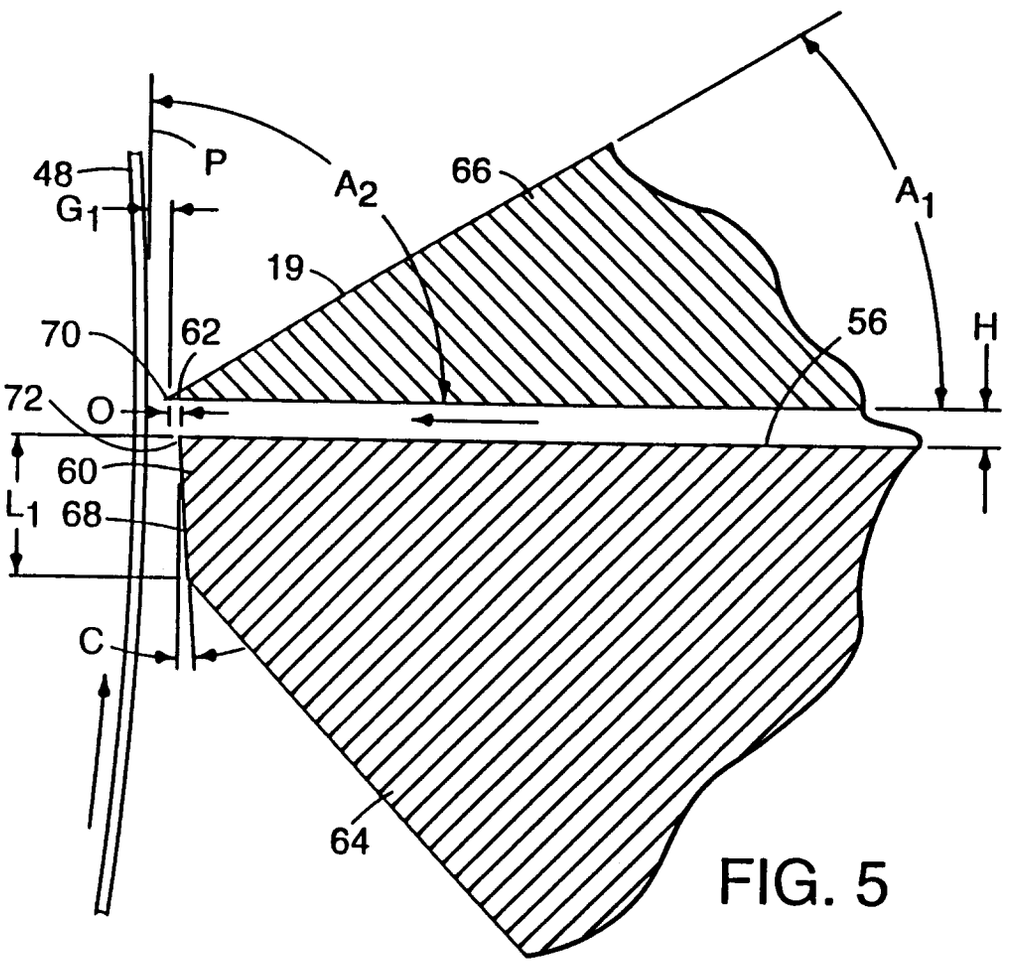

FIG. 5

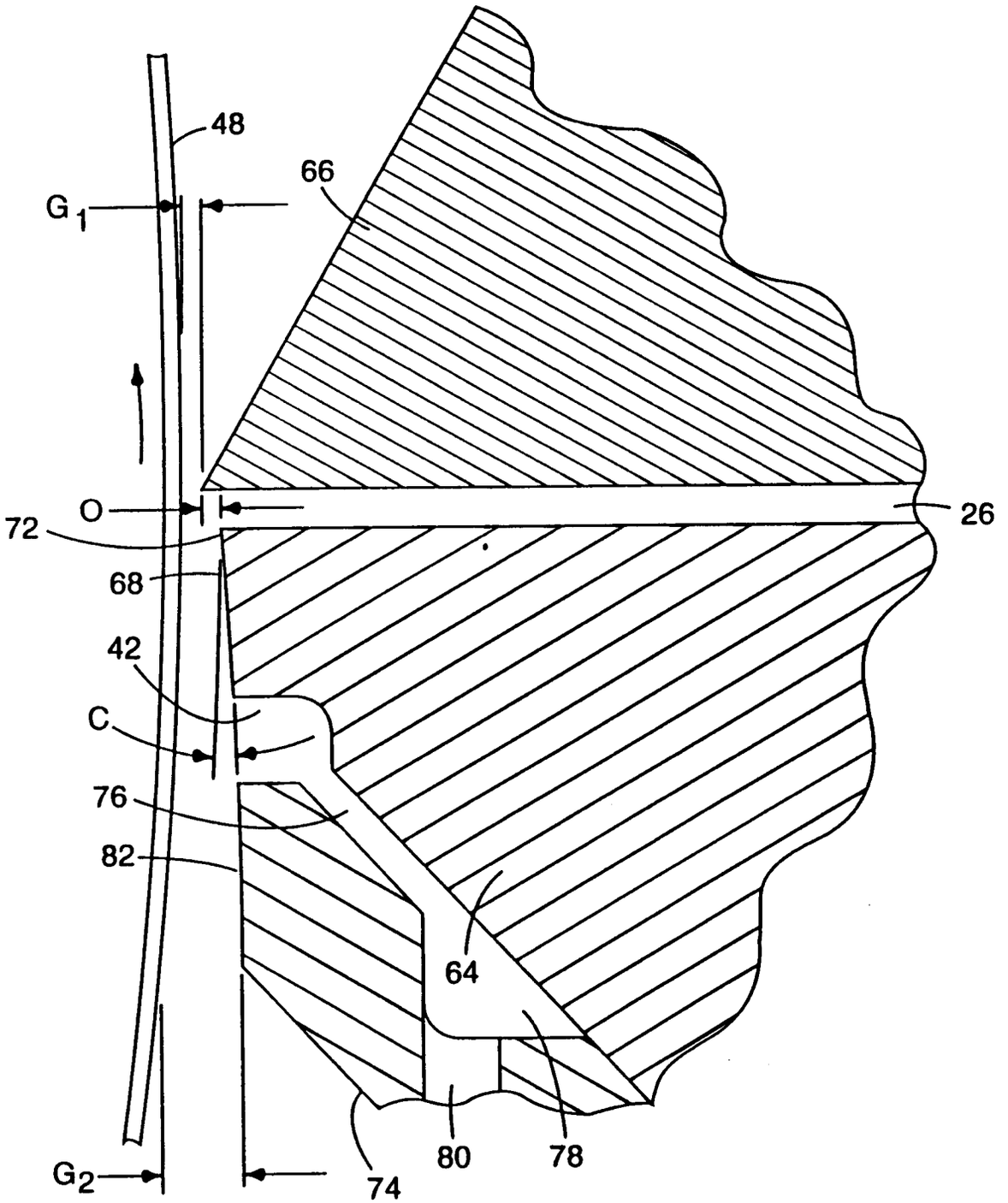

FIG. 6

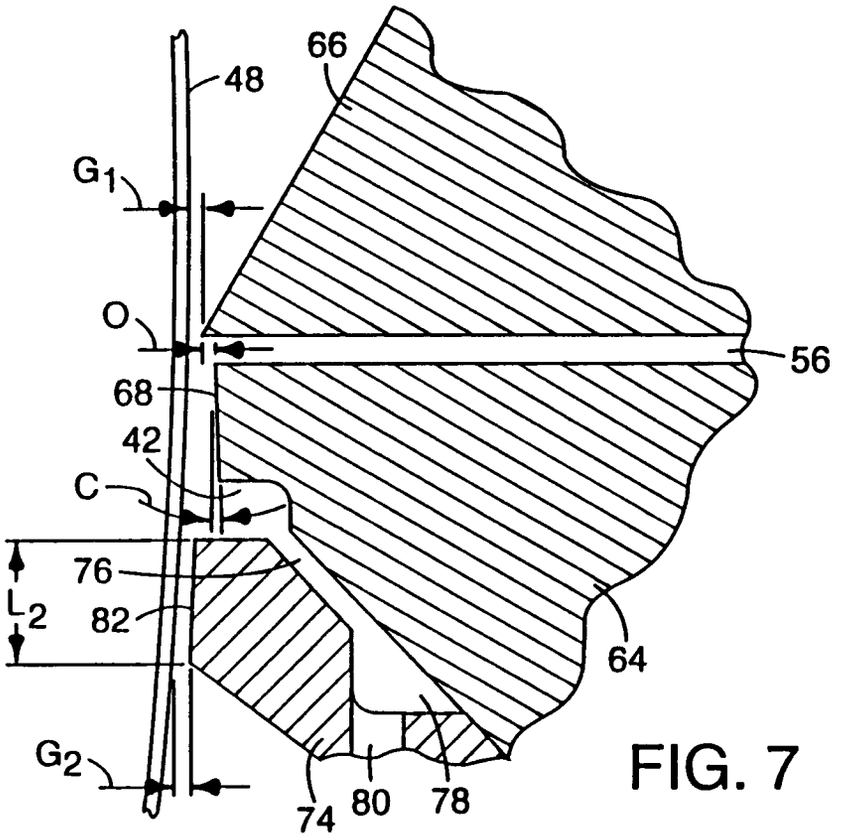
66
48
G1
O
56
68
42
C
76
L2
82
64
G2
74
80
78

FIG. 7

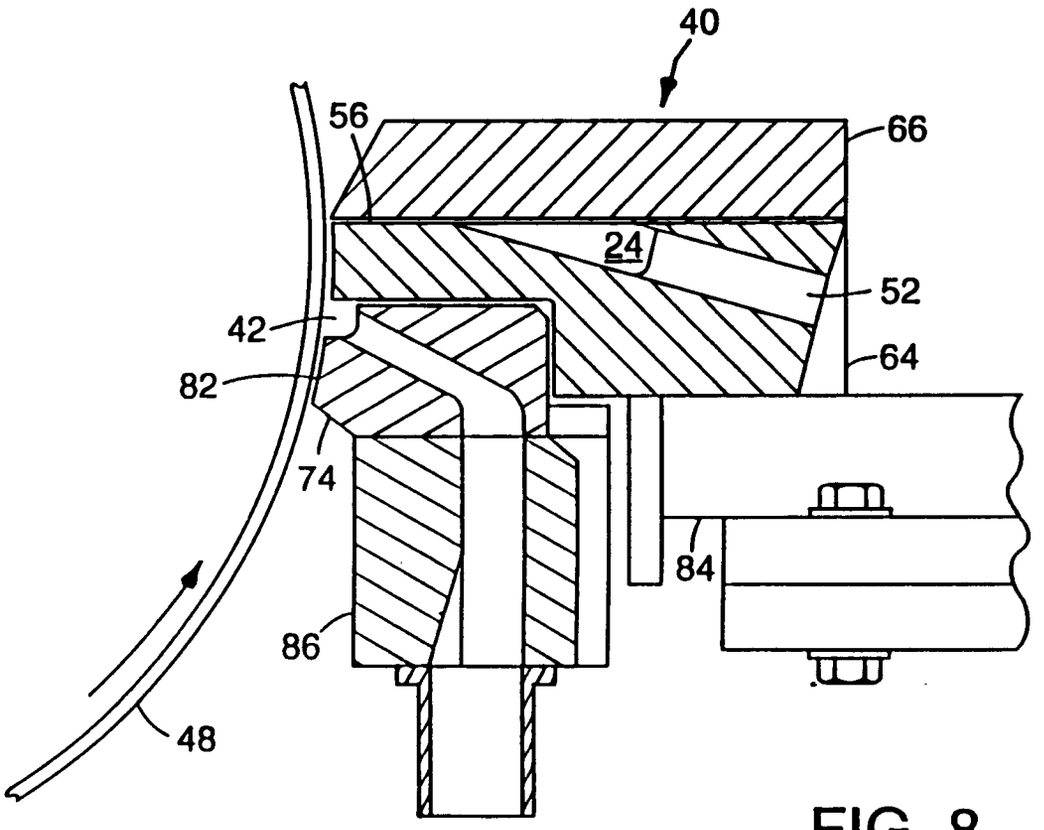
40
56
66
24
52
42
64
82
74
84
86
48

FIG. 8

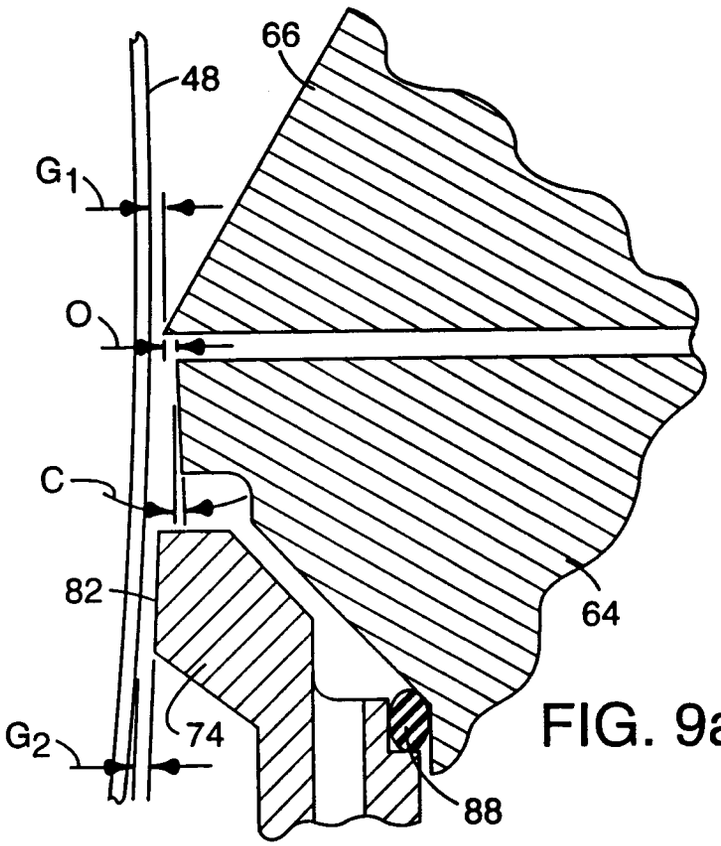

FIG. 9a

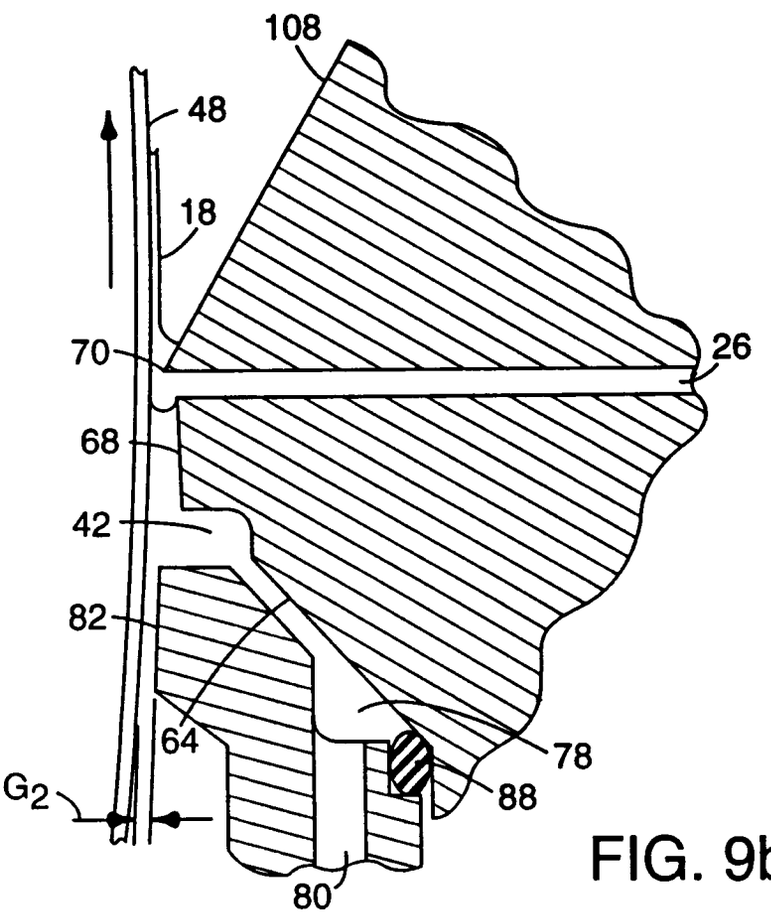

FIG. 9b

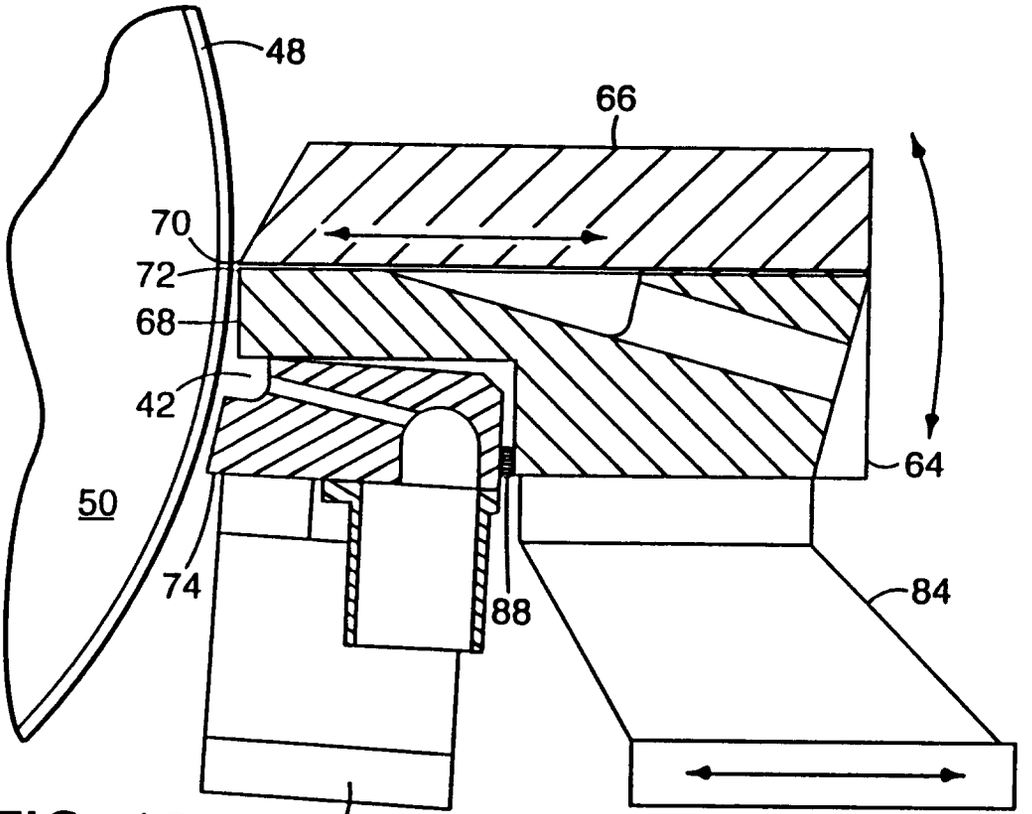

FIG. 10a

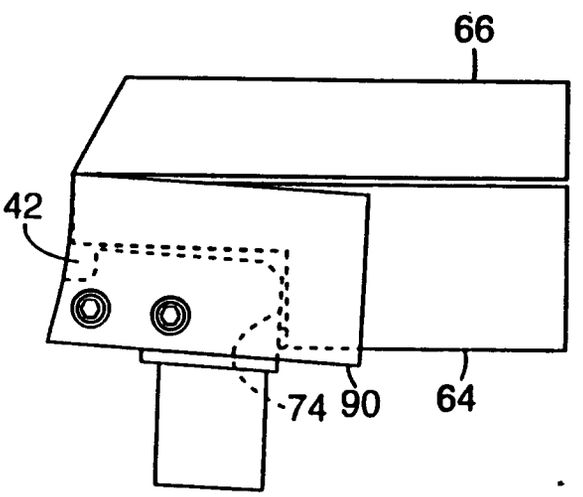

FIG. 10b

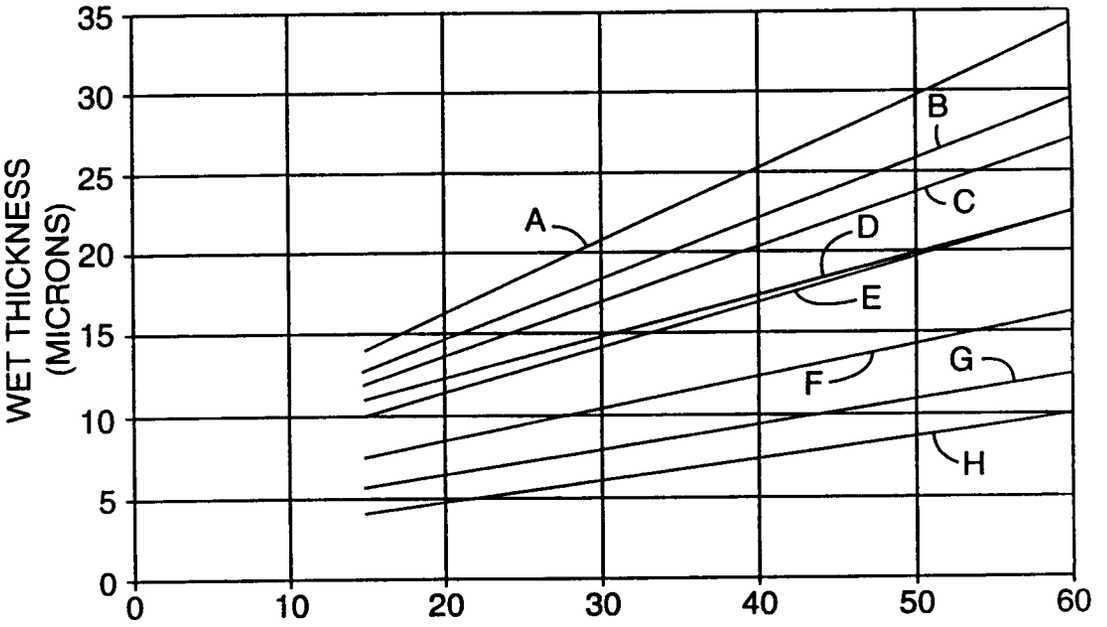
WET THICKNESS (MICRONS)
35
30
25
20
15
10
5
0
0
10
20
30
40
50
60
A
B
C
D
E
F
G
H
WEB SPEED (M/MIN)

FIG. 11

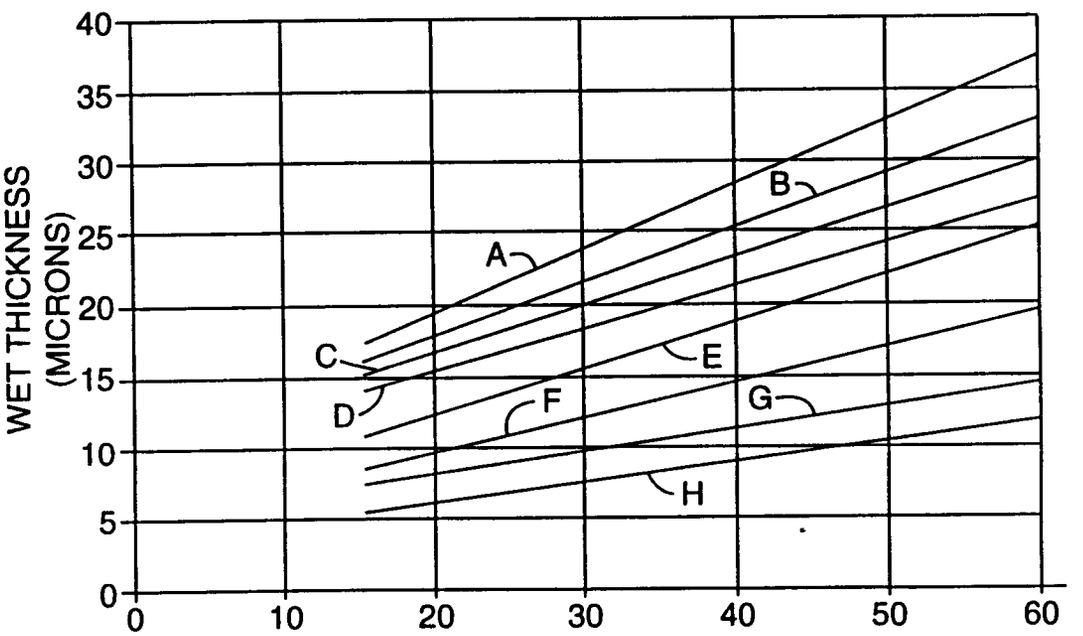
WET THICKNESS (MICRONS)
40
35
30
25
20
15
10
5
0
0
10
20
30
40
50
60
A
B
C
D
E
F
G
H
WEB SPEED (M/MIN)

FIG. 12

VIS (CPS)	Vw (M/MIN)		Tw (MICRONS)		CTG GAP (MM)		VAC (MM H20)	
	PRIOR	NEW	PRIOR	NEW	PRIOR	NEW	PRIOR	NEW
37.6	9.1		22.2		0.076		190.5	
37.6		18.3		15.4		0.076		96.5
37.6		24.4		15.4		0.076		101.6
39.5	18.3	18.3	42	31	0.076	0.124	132.1	43.2
39.5	36.6	36.6	47.2	31	0.076	0.099	165.1	93.9
47	30.5	30.5	45.7	45.7	0.102	0.254	109.2	5.1
131.4	18.3	18.3	62	62	0.102	0.264	66	0
131.4		38.1		62		0.305		0
140	12.2	12.2	33.8	23.1	0.076	0.081	101.6	104.1
158	9.1		46.5		0.076		76.2	
158	.	15.2		23.2		0.076		167.6
600	15.2	15.2	177.3	177.3	0.254	0.432	0	0
600	24.4	24.4	177.3	177.3	0.254	0.305	25.4	0

FIG. 13

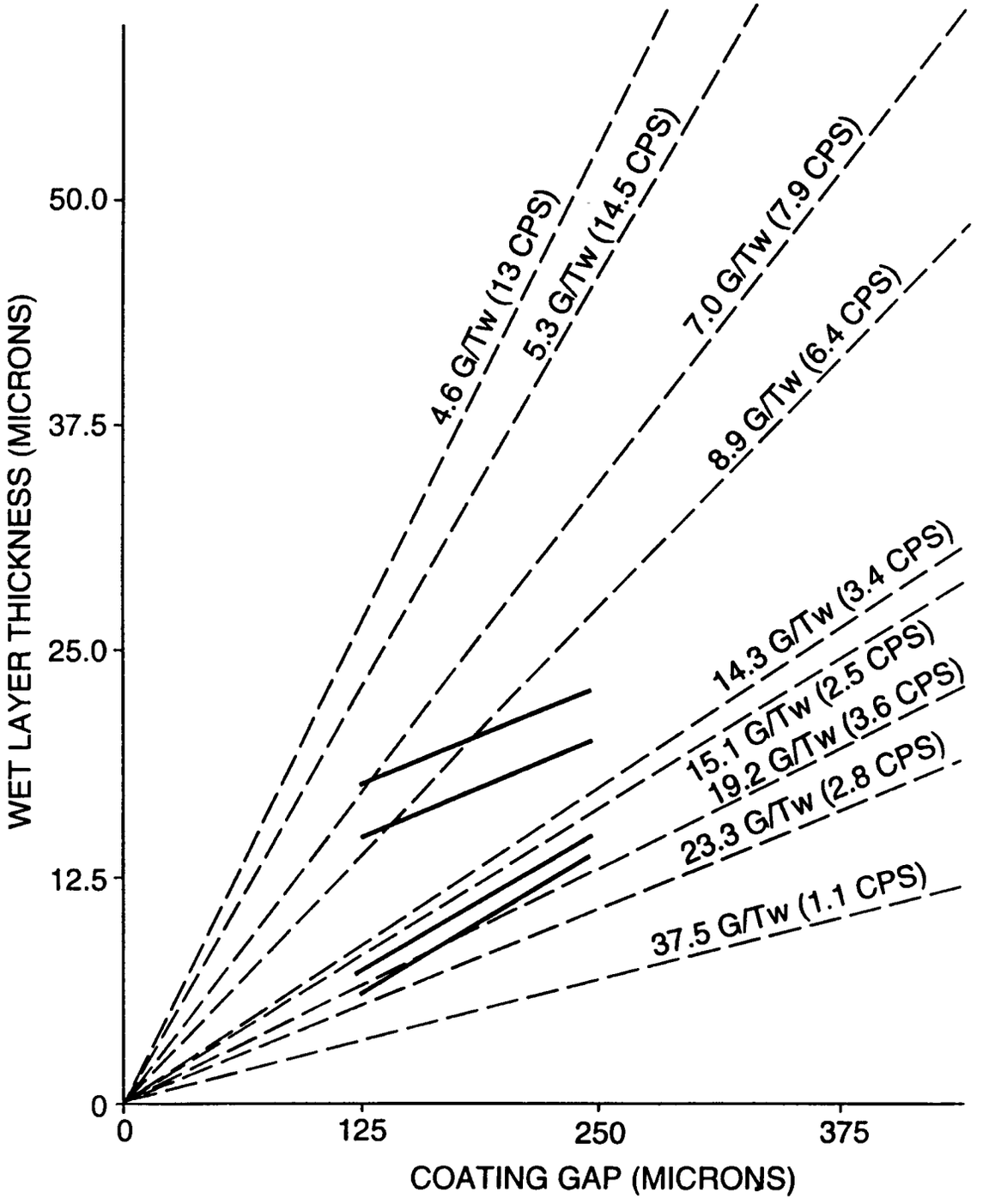
WET LAYER THICKNESS (MICRONS)
50.0
37.5
25.0
12.5
0
0
125
250
375
COATING GAP (MICRONS)
4.6 G/Tw (13 CPS)
5.3 G/Tw (14.5 CPS)
7.0 G/Tw (7.9 CPS)
8.9 G/Tw (6.4 CPS)
14.3 G/Tw (3.4 CPS)
15.1 G/Tw (2.5 CPS)
19.2 G/Tw (3.6 CPS)
23.3 G/Tw (2.8 CPS)
37.5 G/Tw (1.1 CPS)

FIG. 14

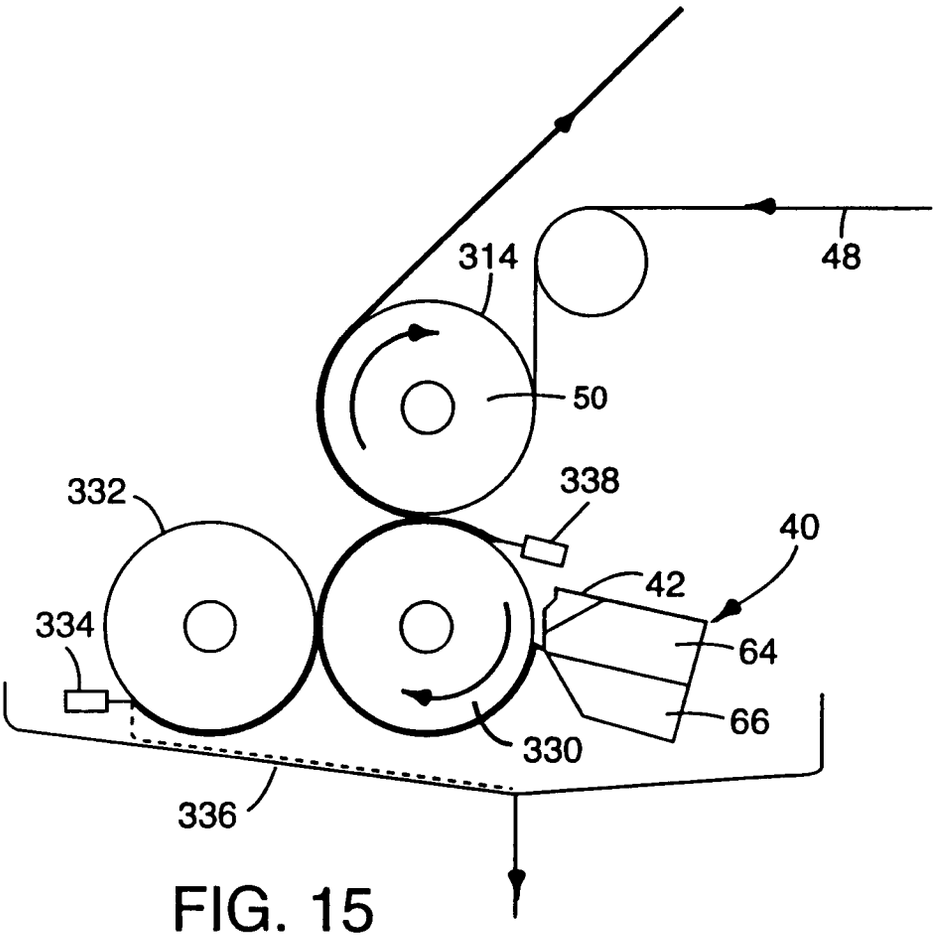
314
48
50
332
338
40
42
334
64
66
330
336

FIG. 15

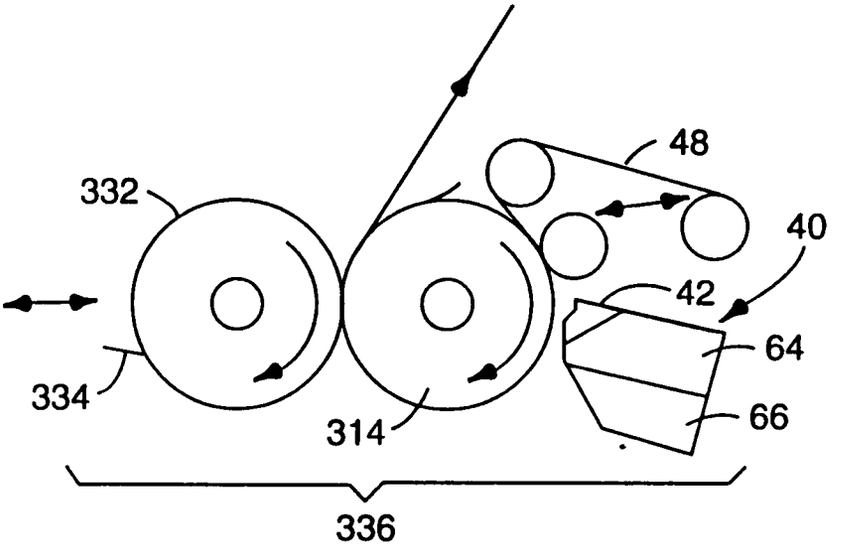
48
332
40
42
64
334
66
314
336

FIG. 16

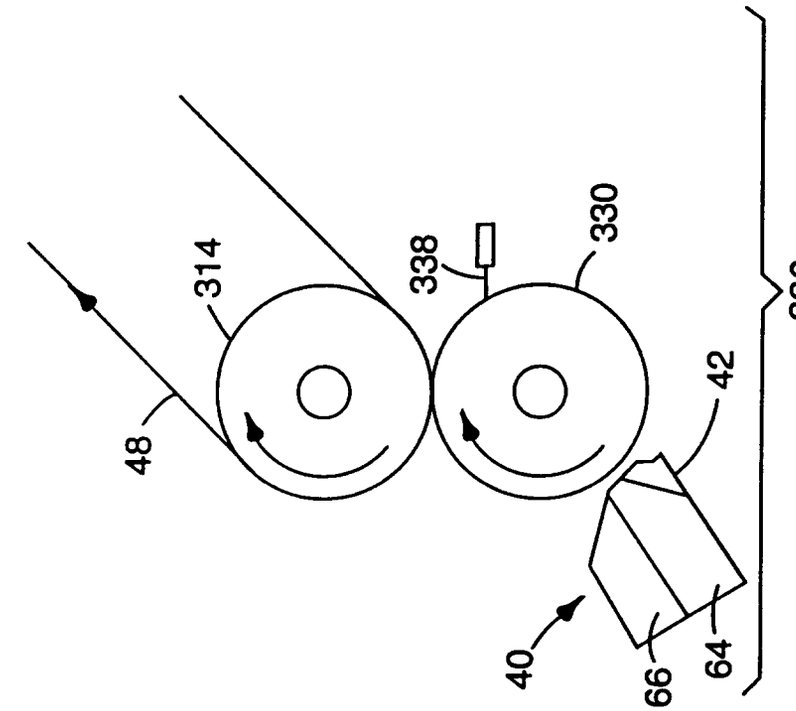

FIG. 18

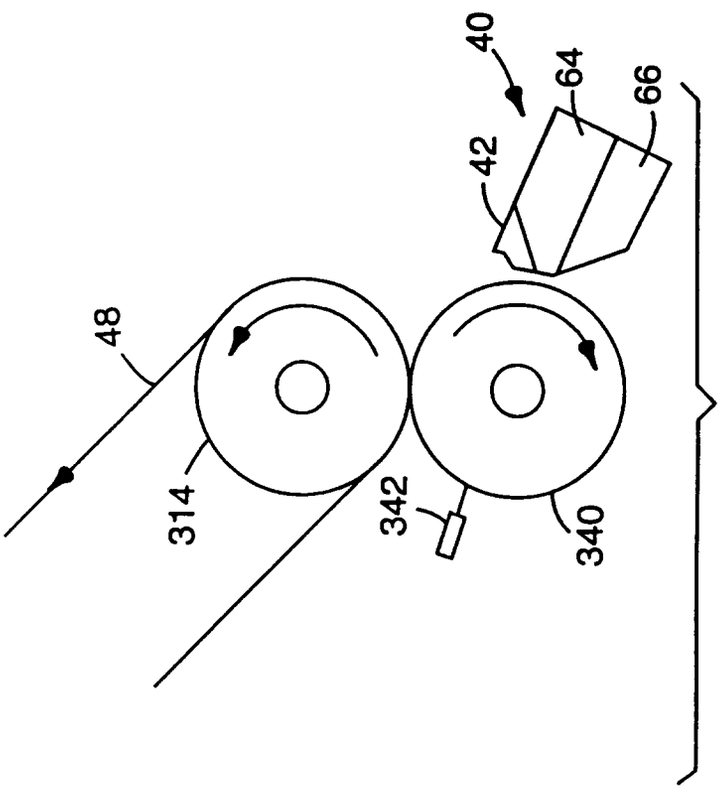

FIG. 17

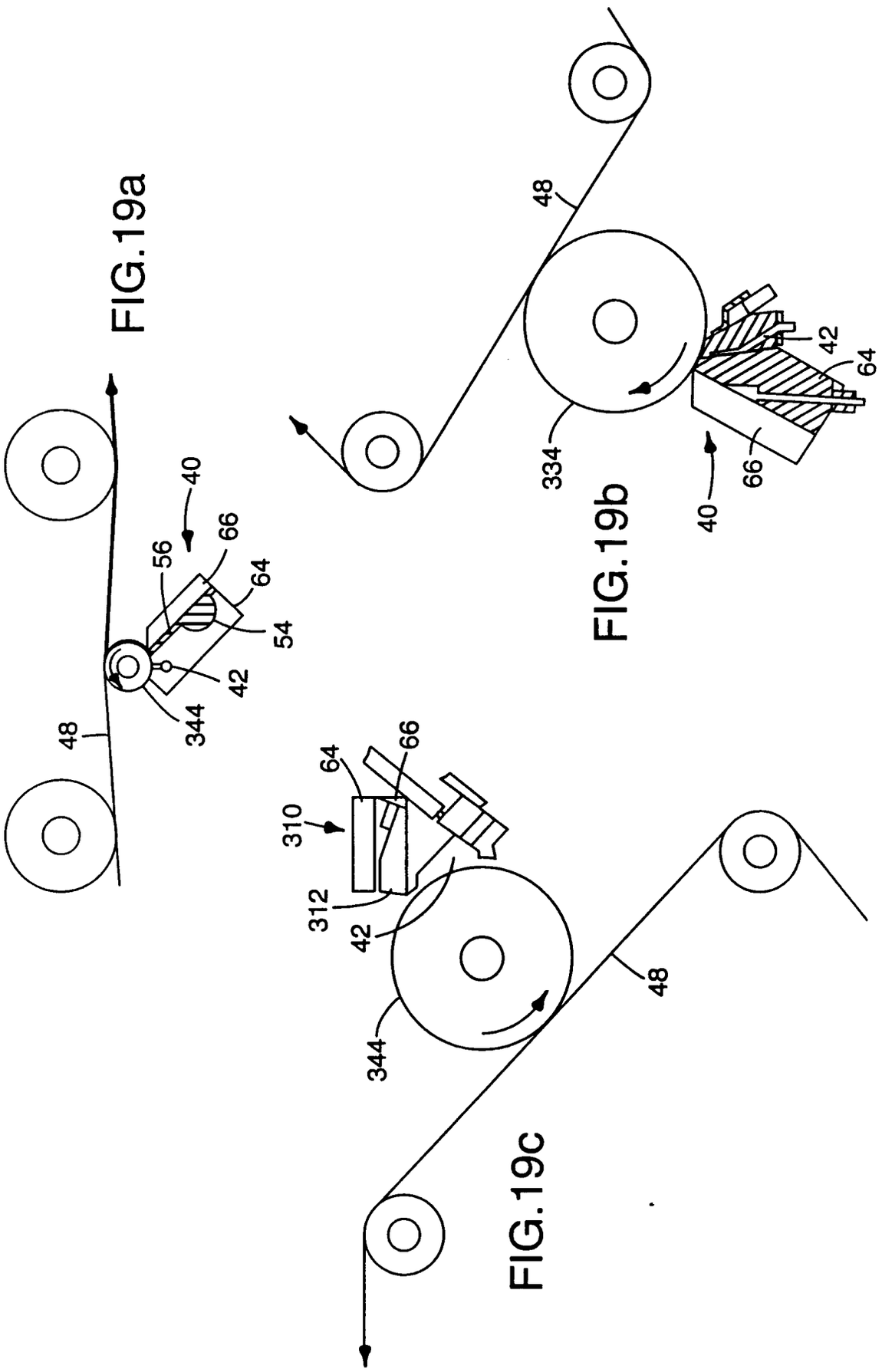
48
40
56
66
64
54
42
344
FIG.19a
48
334
42
64
66
40
FIG.19b
310
64
66
312
42
344
48
FIG.19c

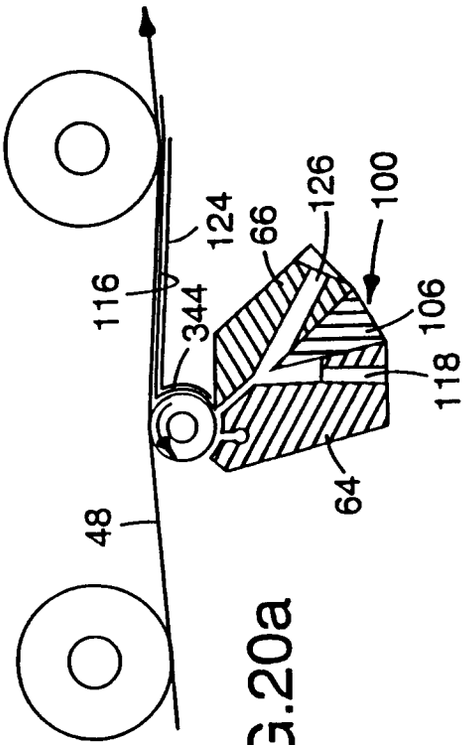

FIG.20a

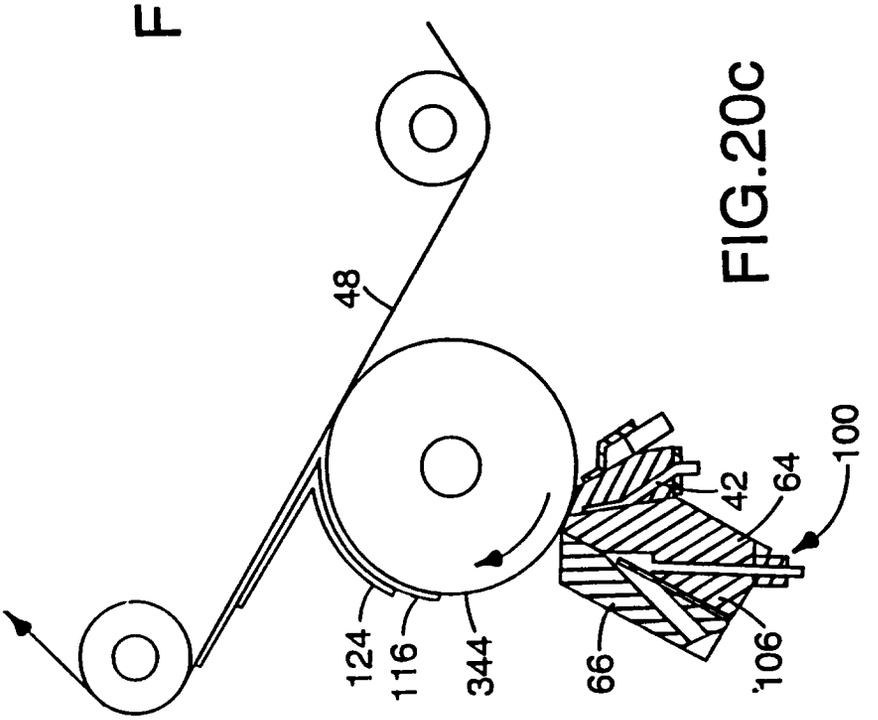

FIG.20c

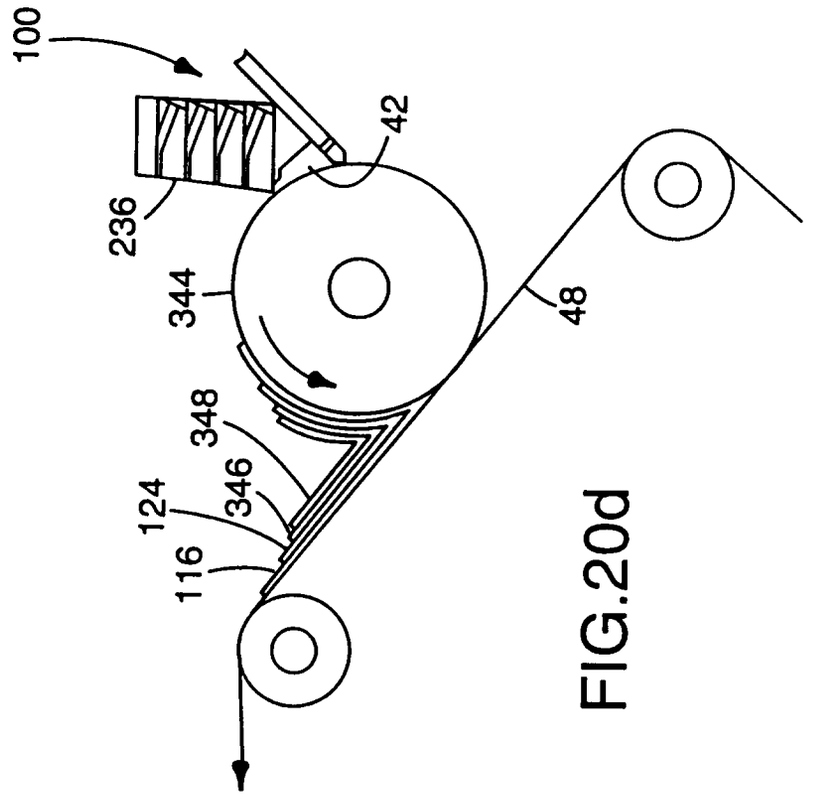

FIG.20d

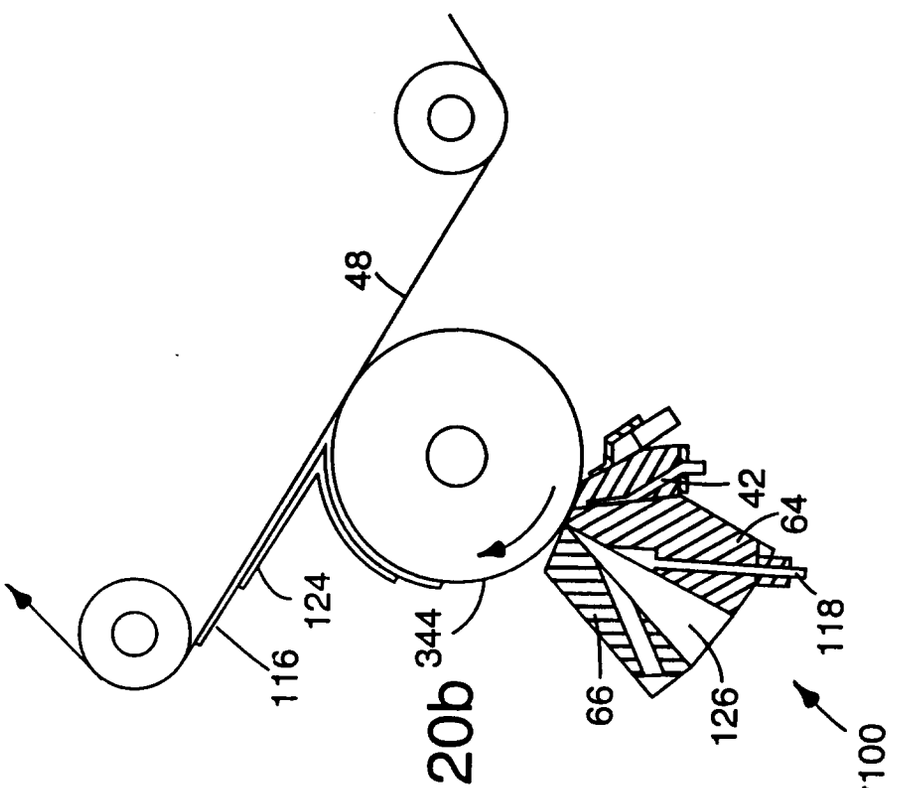

FIG.20b