Feb. 3, 1931. L. P. SCHWEITZER 1,791,288

METHOD AND APPARATUS FOR REGULATING TRAVELING WEBS

Filed Oct. 24, 1928

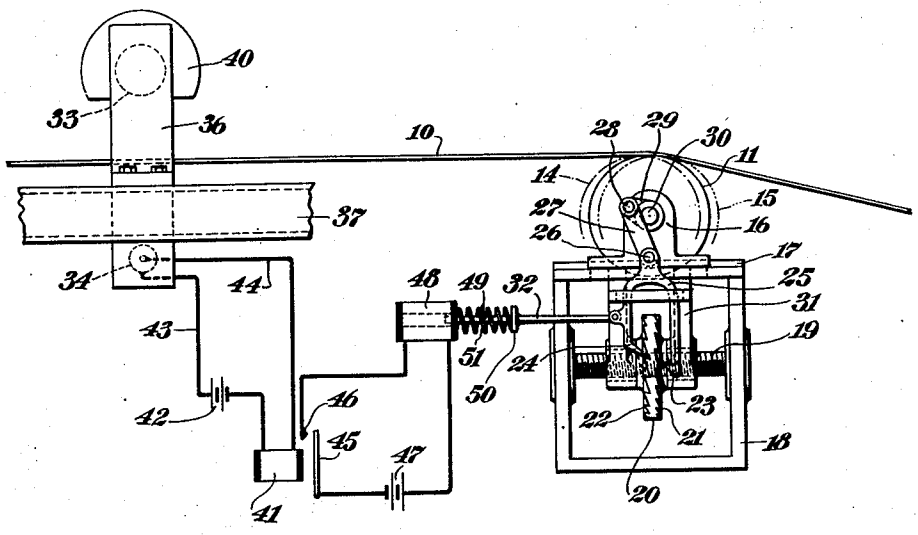

Fig. 1

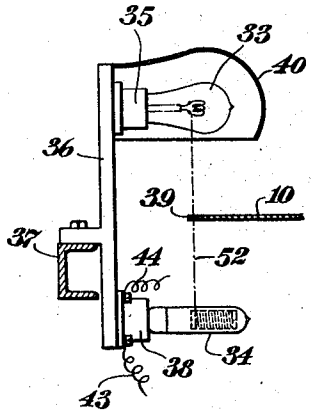

Fig. 2

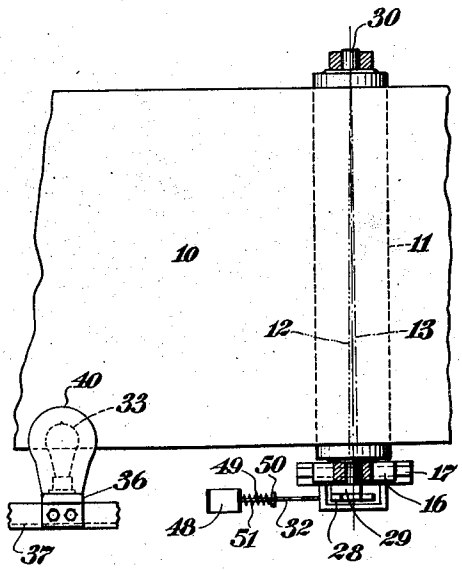

Fig. 3

INVENTOR
Louis P. Schweitzer
BY
Roderick Greitenfeld
ATTORNEY

Patented Feb. 3, 1931 1,791,288

UNITED STATES PATENT OFFICE

LOUIS P. SCHWEITZER, OF NEW YORK, N. Y.

METHOD AND APPARATUS FOR REGULATING TRAVELING WEBS

Application filed October 24, 1928. Serial No. 314,639.

My present invention relates generally to traveling webs, and has particular reference to a method and means for automatically counteracting the tendencies of such web toward lateral deviations away from a desired normalcy.

The type of web to which my invention relates is well represented by the wire screen upon which a film of paper stock is formed during the initial stages of paper manufacture. For purposes of explaining the nature of my invention I have herein illustrated and shall hereinafter describe my invention as applied to a wire screen of this character, but it will be understood that my invention has a far wider applicability, and that the above specific application is herein illustrated and referred to merely for purposes of illustration.

Briefly, my invention has an applicability to any traveling web which is subject to lateral deviations away from a desired normalcy. Such deviations may be due to a great variety of causes with which I am not herein concerned, such as varying degrees of tension in the web, variations in alignment of guide rollers and the like, etc.

Regulation of the foregoing character has heretofore been accomplished by means of an adjustable guide roller for the web, a mechanism for adjusting such roller in a compensatory manner, and a finger or similar mechanical element arranged in constant rubbing contact with an edge of the web for purposes of controlling the adjustment of the roller. Where the regulation is desired in connection with wire screens such as those employed in paper manufacture, and in many other cases, a continuous rubbing contact with an edge of the web is subject to the serious disadvantage that such edge is quickly worn away, thereby causing irregularities in the same which decrease the efficiency of the regulation, and also frequently necessitating repair or total replacement of the web.

It is a general object of my present invention to provide a method and means for regulating a web of the foregoing character wherein physical contact between the web and some controlling device is wholly avoided. In accordance with my invention, the edge of the web is not subject to wear, the efficiency of my regulation therefore remains high and uniform for an indefinite period, and the length of life of the web as a whole is considerably increased.

It is a feature of my invention to provide a regulating apparatus which includes a source of radiant energy, such as a source of light, in combination with an energy-responsive control device, such as a selenium cell, which is well known to be sensitive to light.

In accordance with my invention, I arrange the energy source and the control device in such mutual association with respect to each other and with respect to the web that the recurrent deviations of the web in lateral directions away from the desired normalcy will affect the transmission of energy from the source of energy to the control device. I also provide, in combination with the foregoing, means which are automatically operable by the control device for correcting such deviations.

In the specific embodiment herein illustrated and presently to be described, I arrange a source of light on one side of the web and adjacent to an edge thereof, and I arrange a selenium cell or the like on the opposite side of the web and so positioned that the light will be transmitted to the cell only during deviations in one direction. I provide yieldable means for constantly urging a deviation in such direction, and I provide mechanism whereby the control device will automatically operate, during the reception of light thereby, to effect a corrective deviation.

In general, it is an object to provide a method and apparatus which is not only efficient and reliable but also inexpensive to install and operate.

For the attainment of the foregoing objects and such other objects as may hereinafter appear or be pointed out, I have provided an apparatus illustrated in the accompanying drawings in which—

Figure 1 is an elevational view, partly diagrammatic, of a traveling web with which

my regulating apparatus has been associated;

Figure 2 is a transverse cross-sectional view across the web showing the positional relationship of certain elements of my apparatus with respect to one edge of the web; and

Figure 3 is a plan view of the same.

In the drawings, I have shown a web 10 which is assumed to be traveling from left to right. Regardless of the particular purposes for which the web is employed, it is assumed that such web is subject to lateral deviations, i. e., deviations in a vertical direction as viewed in Figure 3.

I have shown the web 10 passing over a guide roller 11. This roller is so mounted as to be adjustable in a pivotal manner about one end thereof. For example, referring to Figure 3, the roller 11 is adjustable between a position wherein its longitudinal axis would coincide with the line 12, and a position wherein its longitudinal axis would coincide with the line 13. During such adjustment, the forward end of the roller, as viewed in Figure 1, would be adjustable between the dot and dash positions 14 and 15. Such adjustment of the roller 11 serves to shift the web in one or the other lateral direction so as to correct for any undesired deviations resulting from other causes.

Before describing the salient features of my present invention, I will point out that I have illustrated a mechanism in association with the roller 11 which will serve to adjust the roller in the manner outlined in the foregoing paragraph. A saddle or bearing 16 is slidably mounted upon a fixed guide 17 provided on a fixed frame 18. Mounted in the frame 18 is a fixed worm shaft 19, and mounted upon the latter is a ratchet wheel 20 provided with teeth 21 on one lateral face thereof and oppositely disposed teeth 22 on the opposite lateral face. The ratchet 20 is associated with the shaft 19 so that rotation of the ratchet will cause it to travel in one or the other direction along the shaft 19.

A pair of oppositely arranged actuating pawls 23 and 24 are integrally formed upon a member 25 in the shape of an inverted U, the pawls 23 and 24 being so arranged that they may under certain circumstances remain wholly out of contact with the wheel 20.

The member 25 is suitably guided to reciprocate in a substantially straight line which is practically vertical in Figure 1. At its upper end, the member 25 is pivoted at 26 to a small connecting rod 27 extending from the end 28 of a crank 29 mounted upon the shaft 30 of the roller 11. As the roller 11 rotates, the mechanism described will cause the member 25 continuously to reciprocate.

Extending downwardly from the saddle or bearing 16 is a yoke 31 movable to the right or left with the wheel 20.

Extending from the member 25 is an arm 32 whose movement will bring one or the other of the pawls 23 and 24 into operative engagement with the wheel 20. In Figure 1, the pawl 24 is shown in operative engagement with the teeth 22, while the pawl 23 is wholly free of the teeth 21. As the member 25 reciprocates, the pawl 24 actuates the wheel 20 in a direction which causes the front or visible face thereof to move downwardly. This causes the wheel 20 to move to the right along the shaft 19, thereby carrying the yoke 31 and the bearing 16 along with it, and thereby shifting the roller 11 from the full-line position of Figure 1 to the dotted-line position designated by the reference numeral 15.

The method and mechanism which I employ for controlling the operation of the mechanism above described comprises a suitable source of radiant energy such as the electric lamp 33, and a suitable energy-responsive device such as the selenium cell 34. The lamp 33 may be mounted in a socket 35 carried by a fixed bracket 36, the latter being suitably attached to an element 37 of the frame of the machine. Similarly, the cell 34 may be mounted in a socket 38 similarly carried by the bracket 36.

The lamp 33 is positioned above the web 10 and adjacent to an edge 39 thereof; and the cell 34 is positioned beneath the web 10. A reflector 40 may advantageously be employed to direct the light from the lamp 33 toward the cell 34.

In Figure 2, the web 10 is shown in its normal lateral position. It is to be noted that the lamp and the control device are so associated with respect to each other and with respect to the web that the transmission of light from the lamp 33 to the active winding of the cell 34 is totally blocked by the web 10 itself. As a result, the cell 34 is wholly inoperative, and it will remain inoperative even though the web 10 may deviate in a leftward direction as viewed in Figure 2.

In accordance with my invention I provide means which will be presently described for constantly urging the web 10 in a rightward direction. It will be obvious that as soon as such deviation to the right has been initiated, the light from the lamp 33 will skirt the edge 39 and will be received by the active coil or winding of the cell 34. The latter will thereupon become operative.

The manner in which I harness the operation of the cell 34 to my present purposes is shown most clearly in Figure 1. A relay 41 is arranged in a circuit carrying a source of energy 42 and the two lead wires 43 and 44 which are connected respectively to the opposite terminals of the cell 34. An arma-

ture 45 is adapted to establish a contact with a contact element 46 whenever the relay 41 is actuated. Such actuation occurs whenever the cell 34 becomes operative pursuant to the reception of light thereby.

The armature 45 is arranged in a circuit which carries a source of electrical energy 47 and a solenoid 48. The armature 49 of the solenoid 48 may be satisfactorily mounted directly upon the rod 32. A dollar 50 is mounted upon the rod 32 and a compression spring 51 serves constantly to urge the armature 49 and the rod 32 to the right.

When the magnet 48 is energized by closure of the armature 45 with the contact 46, the armature 49 is drawn to the left against the action of the spring 51.

From the foregoing, the operation of my regulating apparatus will be understood. Normally, the spring 51 tends to push the rod 32 to the right, i. e., into the position of Figure 1. This tends to shift the roller 11 to the right, and such adjustment of the roller tends to move the web 10 laterally away from the observer, in Figure 1, and to the right, in Figure 2. Such movement of the web will presently unblock the transmission of energy from the lamp 33 to the cell 34. For example, such energy will skirt the edge 39 along the line of travel 52. This will render the cell 34 operative, will cause a closure of the circuit of the solenoid 48, and will draw the rod 32 to the left. Consequently, the pawl 24 will be released and the pawl 23 will be brought into operative engagement with the teeth 21. Such engagement will presently shift the roller 11 back to its normal position, or possibly toward the left of its normal position, until the web has been returned to normalcy.

Such alternate operation of the spring 51 and the cell 34 will continue indefinitely and will serve to maintain the web in properly regulated normal position.

Although I have shown the energy source and the control device arranged upon opposite sides of the web and adjacent to one edge thereof, nevertheless it will be understood that such an arrangement is merely illustrative of one feasible manner of carrying out my invention. Similarly, although I have shown the cell 34 acting in conjunction with a spring 51, nevertheless it will be understood that I could with equal facility employ a second cell 34 in association with the opposite edges of the web. Various other manners in which the characteristics of an energy-responsive device could be harnessed to the present purposes will readily suggest themselves to those skilled in the art. In fact, many changes in the details herein described and illustrated for the purpose of explaining the nature of my invention may be made by those skilled in the art without departing from the spirit and scope of the invention as expressed in the appended claims. It is therefore intended that these details be interpreted as illustrative, and not in a limiting sense.

Having thus described my invention and illustrated its use, what I claim as new and desire to secure by Letters Patent is—

1. In a web-regulating apparatus, the combination with a traveling web subject to lateral deviations from a desired normalcy, of a source of radiant energy, and an energy-responsive control device controlling the corrective regulation of the web, said source and device being so associated with respect to each other and with respect to said web that energy will be variably transmitted from said source to said device pursuant to variations in said lateral deviation.

2. In a web-regulating apparatus, the combination with a traveling web subject to lateral deviations from a desired normalcy, of a source of radiant energy, and an energy-responsive control device controlling the corrective regulation of the web, said source and device being so associated with respect to each other and with respect to said web that energy will be transmitted from said source to said device in predetermined variable amounts proportionate in a predetermined manner to variations in said lateral deviation.

3. In a web-regulating apparatus, the combination with a traveling web subject to lateral deviations from a desired normalcy, of a source of radiant energy, and an energy-responsive control device controlling the corrective regulation of the web, said source and device being so associated with respect to each other and with respect to said web that energy will be transmitted from said source to said device only during predetermined conditions of lateral deviation.

4. In a web-regulating apparatus, the combination with a traveling web subject to lateral deviations from a desired normalcy, of a source of radiant energy, and an energy-responsive control device controlling the corrective regulation of the web, said source and device being so associated with respect to each other and with respect to said web that energy transmission from said source to said device will be totally blocked during said normalcy and unblocked during certain deviations from normalcy.

5. In a web-regulating apparatus, the combination with a traveling web subject to lateral deviations from a desired normalcy, of a source of radiant energy, and an energy-responsive control device controlling the corrective regulation of the web, said source and device being so positioned on opposite sides of the web that energy will be transmitted from said source to said device only during predetermined conditions of lateral deviation.

6. In a web-regulating apparatus, the combination with a traveling web subject to lateral deviations from a desired normalcy, of a source of radiant energy, and an energy-responsive control device controlling the corrective regulation of the web, said source and device being so positioned on opposite sides of the web that energy transmission from said source to said device will be totally blocked by the web itself during predetermined conditions of lateral deviation.

7. In a web-regulating apparatus, the combination with a traveling web subject to lateral deviations from a desired normalcy, of a source of radiant energy, and an energy-responsive control device controlling the corrective regulation of the web, said source and device being so positioned on opposite sides of the web that energy transmission from said source to said device will be totally blocked by the web itself during predetermined conditions of lateral deviation and will be unblocked during certain other conditions of lateral deviation.

8. In a web-regulating apparatus, the combination with a traveling web subject to lateral deviations from a desired normalcy, of a source of rediant energy, and an energy-responsive control device controlling the corrective regulation of the web, said source and device being so positioned on opposite sides of the web that energy transmission from said source to said device will be totally blocked by the web itself during said normalcy and unblocked during certain deviations from normalcy.

9. In a web-regulating apparatus, the combination with a traveling web subject to lateral deviations from a desired normalcy, of a source of radiant energy, and an energy-responsive control device controlling the corrective regulation of the web, said source and device being so positioned on opposite sides of the web and adjacent to one edge thereof that energy transmission from said source to said device will be totally blocked by said edge during certain conditions of lateral deviation and will skirt said edge during certain other conditions of lateral deviation.

10. In a web-regulating apparatus, the combination with a traveling web subject to lateral deviations from a desired normalcy, of a source of radiant energy, an energy-responsive control device. said source and device being so associated with respect to each other and with respect to said web that the energy transmission from said source to said device will be proportionate in a predetermined manner to said lateral deviation, and means automatically operable by said control device for correcting such deviation.

11. In a web-regulating apparatus, the combination with a traveling web subject to lateral deviations from a desired normalcy, of a source of radiant energy, an energy-responsive control device, said source and device being so associated with respect to each other and with respect to said web that the energy transmission from said source to said device will be proportionate in a predetermined manner to said lateral deviation, and means automatically operable by said control device for correcting such deviation; said means including mechanism operable upon the web to shift the latter, and electrical means for controlling the operation of said mechanism.

12. In a web-regulating apparatus, the combination with a traveling web subject to lateral deviations from a desired normalcy, of a source of radiant energy, an energy-responsive control device, said source and device being so associated with respect to each other and with respect to said web that the energy transmission from said source to said device will be proportionate in a predetermined manner to said lateral deviation, and means automatically operable by said control device for correcting such deviation; said means including mechanism operable upon the web to shift the latter, and electro-magnetic means for timing the operation of said mechanism.

13. In a web-regulating apparatus, the combination with a traveling web subject to lateral deviations from a desired normalcy, of a source of radiant energy, an energy-responsive control device, said source and device being so associated with respect to each other and with respect to said web that the energy transmission from said source to said device will be proportionate in a predetermined manner to said lateral deviation, and means automatically operable by said control device for correcting such deviation; said means including mechanism operable upon the web to shift the latter, said mechanism including a ratchet and an adjustable actuating pawl, and electrical means for adjusting said pawl.

14. In a web-regulating apparatus, the combination with a traveling web subject to lateral deviations from a desired normalcy, of a source of radiant energy, an energy-responsive control device, said source and device being so associated with respect to each other and with respect to said web that the energy transmission from said source to said device will be proportionate in a predetermined manner to said lateral deviation, and means automatically operable by said control device for correcting such deviation; said means including mechanism operable upon the web to shift the latter, said mechanism including a ratchet and an adjustable actuating pawl, and electrical means for adjusting said pawl; said electrical means comprising an electro-magnet, and an armature connected to said pawl.

15. In a web-regulating apparatus, the combination with a traveling web subject to lateral deviations from a desired normalcy, of a source of radiant energy, an energy-responsive control device, said source and device being so positioned on opposite sides of the web and adjacent to one edge thereof that energy transmission from said source to said device will be totally blocked by said edge during lateral deviations in one direction and will skirt said edge during lateral deviations in the opposite direction; and means automatically operable by said control device during the reception of energy by the latter for correcting such last-mentioned deviation.

16. In a web-regulating apparatus, the combination with a traveling web subject to lateral deviations from a desired normalcy, of a source of radiant energy, an energy-responsive control device, said source and device being so positioned on opposite sides of the web and adjacent to one edge thereof that energy transmission from said source to said device will be totally blocked by said edge during lateral deviations in one direction and will skirt said edge during lateral deviations in the opposite direction; yieldable means for urging a deviation in the last-mentioned direction, and means automatically operable by said control device during the reception of energy by the latter for urging a corrective deviation.

17. In a web-regulating apparatus, the combination with a traveling web subject to lateral deviations from a desired normalcy, of a source of light on one side of the web and adjacent to an edge thereof, a light-sensitive control device on the opposite side of the web, said device being so positioned that it will receive the light from said source only during deviations of the web in one direction, and means automatically operable by said device during the reception of light thereby for causing a corrective deviation of the web and a consequent discontinuance of such light reception.

18. In combination with a traveling web and an adjustable guide roller therefor, an apparatus for regulating the web so as to keep it in a predetermined positional association with said roller, said apparatus comprising a source of light on one side of the web and adjacent to an edge thereof, a control device on the opposite side of said web and receptively positioned with respect to the light skirting said edge, said device being responsive to the light thus received, and means automatically operable by said control device during reception of light thereby for adjusting the roller.

19. The herein-described method of regulating a traveling web which is subject to lateral deviations from a desired normalcy, which comprises the step or steps of transmitting a beam of radiant energy from one side of the web toward the opposite side thereof in a manner whereby such transmission is intercepted by the web during certain deviations, and shifting the web in a corrective manner whenever the transmission is not intercepted.

In witness whereof I have signed and sealed this specification this 16 day of October, 1928.

LOUIS P. SCHWEITZER.