May 19, 1936. G. J. BAUCH 2,041,391

BOTTLE OPENER AND SEALER

Filed Aug. 7, 1933

Fig. 1.

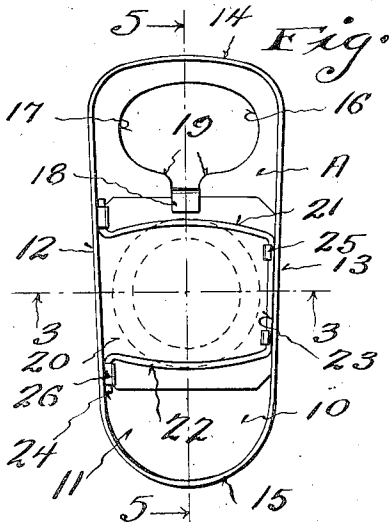

Fig. 2.

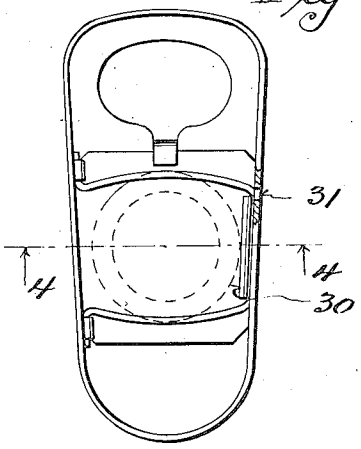

Fig. 3.

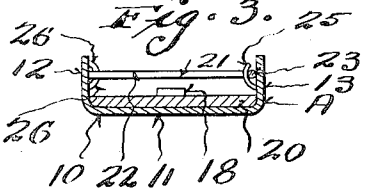

Fig. 4.

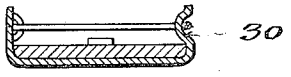

Fig. 5.

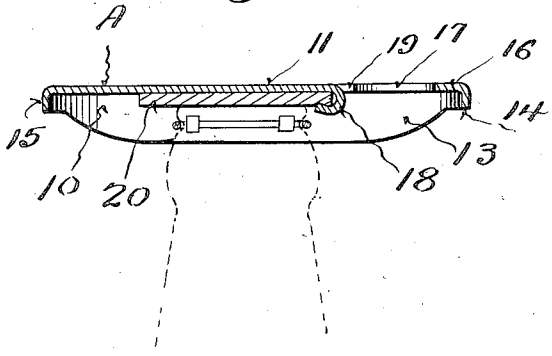

Fig. 6.

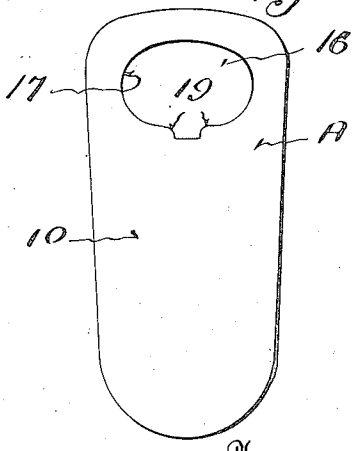

Inventor
G. J. Bauch.
By
Attorneys

Patented May 19, 1936

2,041,391

UNITED STATES PATENT OFFICE

2,041,391

BOTTLE OPENER AND SEALER

George J. Bauch, Milwaukee, Wis.

Application August 7, 1933, Serial No. 684,009

1 Claim. (Cl. 215—37)

This invention appertains to a unitary appliance for opening bottles and for effectively sealing the same after the cap has been removed therefrom.

The need for some simple device for effectively resealing a bottle after the removal of its cap and use of part of its contents to preserve the remaining part is well known, but to my knowledge no simple inexpensive portable device of this character has been produced.

It is therefore one of the primary objects of my invention to provide a simple hand appliance which can be carried in the pocket (if so desired) and which can be readily and easily snapped over the neck of a bottle by the ordinary layman and maintain the remaining contents of the bottle in a fresh condition without loss of the carbonating gas.

Another salient object of my invention is to provide a bottle sealing device embodying a body plate forming a handle and having on its inner face a compressible sealing pad with spring clips carried by the body plate and disposed adjacent to the opposite sides of the pad for snapping over the bead of the bottle neck, whereby to hold the pad in intimate contact with the neck to provide an air and liquid-tight closure.

A further important object of my invention is the provision of novel means for holding the compressible pad on the body plate and novel means for anchoring the resilient clip in place so that the ease of assembling the parts is insured.

A further object of my invention is the provision of means for forming a bottle opener at one end of the body plate, whereby the appliance can be utilized for the dual purpose of opening a bottle and for sealing a bottle, the remaining portion of the top of the body plate not occupied by the bottle opener forming a space for the reception of advertising matter.

A still further object of my invention is to provide a novel device of the above character, which will be durable and efficient in use, one that will be simple and easy to manufacture, and one which can be placed upon the market at a reasonable cost.

With these and other objects in view, the invention consists in the novel construction, arrangement and formation of parts, as will be hereinafter more specifically described, claimed and illustrated in the accompanying drawing, in which drawing:—

Figure 1 is a bottom plan view illustrating one preferred form of my improved device;

Figure 2 is a similar view illustrating a slightly modified form of the device;

Figure 3 is a transverse section taken on the line 3—3 of Figure 1 looking in the direction of the arrows;

Figure 4 is a transverse section taken on the line 4—4 of Figure 2 of the drawing;

Figure 5 is a central longitudinal section through the improved device taken on the line 5—5 of Figure 1 and illustrating the same in position on a bottle neck for sealing the same; and

Figure 6 is a top plan view of my improved device.

Referring to the drawing in detail, wherein similar reference characters designate corresponding parts throughout the several views, the letter A generally indicates my improved device which comprises a body plate **10** struck from a single blank of sheet metal of the desired gauge. This body plate **10** includes a flat top wall **11** having depending side marginal flanges **12** and **13** and end marginal flanges **14** and **15**.

The body plate preferably narrows toward one end so as to form an efficient hand grip.

At one end of the body plate I provide a bottle opener **16**, and this opener may be formed by simply cutting out a part of the top wall **11** to form a transversely extending elliptical shaped opening **17**. The rear wall of this opening, at its central portion, is provided with a turned-back tongue **18**, for a purpose which will be later set forth. It is to be noted, however, that the tongue **18** forms lips **19** at each side for engaging under the corrugations of a crown cap.

The salient feature of my invention resides in the bottle sealer and I, therefore, provide a compressing pad **20** on the inner face of the top wall **11**. This pad can be made from the desired material, such as sheet rubber, and the same is held in place by the tongue **18** which is bent into gripping contact therewith.

In conjunction with the compressible pad **20**, I employ novel means for holding the body plate on a bottle and the pad in a compressed condition.

This means embodies a substantially U-shaped wire leaf spring **21** having the legs **22** and the connecting bight portion **23**. If preferred, the legs **22** can be slightly bowed in opposite directions. The outer terminals of the legs **22** have formed thereon oppositely extending lateral attaching feet **24**.

In order to securely hold the spring, or clip, in position, I strike out from the side flange **13**

ears 25 which are bent over the bight portion 23 after the bight portion has been placed in engagement with the inner face of the flange 13 and in engagement with the struck-out ears 25.

The feet 24 are placed through struck-out loops 26 formed in the flange 12, and this can be accomplished by pressing the legs 22 inwardly toward one another until the feet can ride into said lips.

The legs 22 are disposed in predetermined relation to the pad 20, and in use of my improved device, one leg 22 is placed over the bead of the bottle neck, after which the body plate is swung downward so as to snap the other leg 22 over the bottle bead. The snapping of the leg over the bead moves the pad 20 into a compressed engagement with the bottle neck and prevents all loss of gas and the like.

The body plate is removed from the bottle in the same manner, that is, by first swinging one end of the plate upwardly until one leg 22 rides past the pad.

Obviously, other means can be employed for holding the U-shaped spring, or clip, in position, and in Figures 2 and 3, I have illustrated another method. In this form a longitudinally extending rib 30 is struck inwardly from one of the side flanges and slits 31 are cut in said flange at the ends of the rib. The U-shaped clip has its legs threaded through the slits until the bight portion rides into the rib after which the feet on the clips are moved into engagement with the lips carried by the other flange.

From the foregoing description it can be seen that I have provided an exceptionally simple and durable device for effectively resealing bottles after the same have been opened.

Changes in details may be made without departing from the spirit or scope of this invention, but what I claim as new is:—

A bottle sealing device comprising a body member having a flat body plate and depending side marginal flanges, a pad of compressible material fitted against the top wall between said flanges, means for detachably snapping the body member over a bottle neck with the pad in compressed condition, including a substantially U-shaped spring having spaced resilient legs, a connecting bight portion, oppositely extending lateral feet on the outer ends of the legs, the legs extending transversely across the inner face of the top wall, means for anchoring the bight portion to one side flange, and means for anchoring the feet to the other side flange, said spring being located wholly within the confine of the body plate and side flanges in slightly spaced relation to the pad.

GEORGE J. BAUCH.